United States
Environmental Protection
Agency

Office of Water (4303)
Washington, DC 20460

EPA-821-B-00-005
December 2000

Development Document For The Proposed Effluent Limitations Guidelines And Standards For The Metal Products & Machinery Point Source Category

Printed on paper containing at least 30% postconsumer recovered fiber.

Development Document
For The Proposed Effluent Limitations Guidelines and Standards For The Metal Products & Machinery Point Source Category

Carol M. Browner
Administrator

J. Charles Fox
Assistant Administrator, Office of Water

Geoffrey H. Grubbs
Director, Office of Science and Technology

Sheila E. Frace
Director, Engineering and Analysis Division

Marvin Rubin
Chief, Energy Branch

Shari Z. Barash
Project Manager

Michael C. Ebner
Assistant Project Manager

Lynne Tudor
Project Economist

Helen Jacobs
Project Statistician

December 2000

U.S. Environmental Protection Agency
Office of Water
Washington, DC 20460

ACKNOWLEDGMENTS AND DISCLAIMER

The Agency would like to acknowledge the contributions of Shari Barash, Mike Ebner, Marvin Rubin, Helen Jacobs, Lynne Tudor, Karen Clark, and Beverly Randolph to development of this technical document. In addition, EPA acknowledges the contribution of Eastern Research Group, Westat, Abt Associates, and Science Applications International Corporation.

Neither the United States government nor any of its employees, contractors, subcontractors, or other employees makes any warranty, expressed or implied, or assumes any legal liability or responsibility for any third party's use of, or the results of such use of, any information, apparatus, product, or process discussed in this report, or represents that its use by such a third party would not infringe on privately owned rights.

TABLE OF CONTENTS

Page

1.0 SUMMARY AND SCOPE OF THE REGULATION 1-1
1.1 Overview of the MP&M Point Source Category 1-1
1.2 Applicability of MP&M and Overlap with Other Effluent Guidelines 1-3
1.3 Proposed Effluent Limitations Guidelines and Standards 1-6

2.0 BACKGROUND 2-1
2.1 Legal Authority 2-1
2.2 Regulatory Background 2-1
2.2.1 Clean Water Act 2-1
2.2.2 Section 304(m) Requirements 2-4
2.2.3 Pollution Prevention Act 2-5
2.2.4 Regulatory Flexibility Act (RFA) as Amended by the Small Business Regulatory Enforcement Fairness Act of 1996 (SBREFA) 2-5
2.2.5 Regulatory History of the Metals Industry 2-7

3.0 DATA COLLECTION ACTIVITIES 3-1
3.1 Industry Questionnaires 3-1
3.1.1 The 1989 Industry Surveys 3-1
3.1.1.1 1989 Screener Survey 3-2
3.1.1.2 1989 Detailed Survey 3-7
3.1.2 The 1996 Industry Surveys 3-11
3.1.2.1 1996 Screener Surveys 3-12
3.1.2.2 1996 Long Detailed Survey 3-14
3.1.2.3 1996 Short Detailed Survey 3-18
3.1.2.4 1996 Municipality Detailed Survey 3-20
3.1.2.5 1996 Federal Facilities Detailed Survey 3-22
3.1.2.6 1997 Iron and Steel Industry Short Survey Data 3-23
3.1.2.7 1996 Publicly Owned Treatment Works (POTW) Detailed Survey 3-24
3.2 Site Visits 3-26
3.2.1 Criteria for Site Selection 3-26
3.2.2 Information Collected 3-28
3.3 Wastewater and Solid Waste Sampling 3-28
3.3.1 Criteria for Site Selection 3-29
3.3.2 Information Collected 3-30
3.3.3 Sample Collection and Analysis 3-30
3.4 Other Sampling Data 3-37
3.5 Other Industry-Supplied Data 3-37

TABLE OF CONTENTS (Continued)

Page

3.6 Other Data Sources 3-38
3.6.1 EPA/EAD Databases 3-38
3.6.2 Fate of Priority Pollutants in Publicly Owned Treatment Works Database 3-39
3.6.3 National Risk Management Research Laboratory (NRMRL) Treatability Database 3-39
3.6.4 The Domestic Sewage Study 3-40
3.6.5 Toxics Release Inventory (TRI) Database 3-40
3.7 References 3-41

4.0 INDUSTRY DESCRIPTION 4-1
4.1 Overview of the Industry 4-1
4.1.1 Number and Size of MP&M Sites 4-1
4.1.2 Geographic Distribution 4-2
4.1.3 Wastewater-Discharging Sites 4-3
4.1.4 Non-Wastewater-Discharging Sites 4-7
4.2 General Discussion of MP&M Processes 4-10
4.2.1 Types of Unit Operations Performed 4-10
4.2.2 MP&M Unit Operations and Rinses 4-13
4.2.3 Metal Types Processed 4-30
4.2.4 Wastewater Discharge Volumes Generated 4-31
4.3 Trends in the Industry 4-35
4.4 References 4-35

5.0 WASTEWATER CHARACTERISTICS 5-1
5.1 Hexavalent Chromium-Bearing Wastewater 5-1
5.1.1 Unit Operations Generating Hexavalent Chromium-Bearing Wastewater 5-2
5.1.2 Chromium-Bearing Raw Wastewater Characteristics 5-3
5.2 Cyanide-Bearing Wastewater 5-4
5.2.1 Unit Operations Generating Cyanide-Bearing Wastewater 5-4
5.2.2 Cyanide-Bearing Raw Wastewater Characteristics 5-5
5.3 Oil-Bearing and Organic Pollutant-Bearing Wastewater 5-6
5.3.1 Unit Operations Generating Oil-Bearing and/or Organic Pollutant-Bearing Wastewater 5-6
5.3.2 Oil-Bearing and Organic Pollutant-Bearing Raw Wastewater Characteristics 5-16
5.4 Chelated Metal-Bearing Wastewater 5-20
5.4.1 Unit Operations Generating Chelated Metal-Bearing Wastewater 5-20
5.4.2 Chelation-Breaking Raw Wastewater Characteristics 5-20

TABLE OF CONTENTS (Continued)

Page

5.5 General Metal-Bearing Wastewater 5-21
5.5.1 Unit Operations Generating General Metal-Bearing Wastewater 5-21
5.5.2 General Metal-Bearing Raw Wastewater Characteristics 5-29

6.0 INDUSTRY SUBCATEGORIZATION 6-1
6.1 Methodology and Factors Considered for Basis of Subcategorization . 6-1
6.1.1 Factors Contributing to Subcategorization 6-2
6.1.2 Factors That are not a Basis for MP&M Subcategorization . . . 6-9
6.2 General Description of Facilities in Each Subcategory 6-13
6.2.1 General Metals Subcategory 6-13
6.2.2 Metal Finishing Job Shops Subcategory 6-14
6.2.3 Non-Chromium Anodizing Subcategory 6-14
6.2.4 Printed Wiring Board Subcategory 6-15
6.2.5 Steel Forming and Finishing 6-15
6.2.6 Oily Wastes Subcategory 6-16
6.2.7 Railroad Line Maintenance Subcategory 6-17
6.2.8 Shipbuilding Dry Dock Subcategory 6-18

7.0 SELECTION OF POLLUTANT PARAMETERS 7-1
7.1 Identification of Pollutant Parameters of Concern 7-3
7.2 Pollutants Proposed to be Regulated for Direct Dischargers 7-13
7.2.1 Regulated Pollutant Analysis for Direct Dischargers in the Metal-Bearing Subcategories 7-13
7.2.1.1 General Metals Subcategory 7-20
7.2.1.2 Metal Finishing Job Shops Subcategory 7-20
7.2.1.3 Non-Chromium Anodizing Subcategory 7-20
7.2.1.4 Printed Wiring Board Subcategory 7-21
7.2.1.5 Steel Forming and Finishing Subcategory 7-21
7.2.2 Regulated Pollutant Analysis for Direct Dischargers in the Oil-Bearing Subcategories 7-21
7.2.2.1 Oily Wastes Subcategory 7-26
7.2.2.2 Railroad Line Maintenance Subcategory 7-27
7.2.2.3 Shipbuilding Dry Dock Subcategory 7-27
7.3 Pollutants Proposed to be Regulated for Indirect Dischargers 7-27
7.3.1 Pass-through Analysis for Indirect Dischargers 7-28
7.3.2 Pass-through Analysis Results for Existing Sources 7-31
7.3.3 Pass-through Analysis Results for New Sources 7-32
7.4 References 7-34

TABLE OF CONTENTS (Continued)

Page

8.0 POLLUTION PREVENTION PRACTICES AND WASTEWATER TREATMENT TECHNOLOGIES 8-1
8.1 Pollution Prevention Practices 8-1
8.1.1 Flow Reduction Practices 8-1
8.1.1.1 Rinse Tank Design and Innovative Configurations . . 8-1
8.1.1.2 Additional Rinse Design Elements 8-4
8.1.1.3 Rinse Water Use Control 8-5
8.1.1.4 Pollution Prevention for Process Baths 8-6
8.1.2 In-Process Pollution Prevention Technologies 8-7
8.1.2.1 Activated Carbon Adsorption 8-7
8.1.2.2 Carbonate "Freezing" 8-8
8.1.2.3 Centrifugation and Pasteurization of Machining Coolants 8-8
8.1.2.4 Centrifugation and Recycling of Painting Water Curtains 8-9
8.1.2.5 Electrodialysis 8-11
8.1.2.6 Electrolytic Recovery 8-11
8.1.2.7 Evaporation 8-13
8.1.2.8 Filtration 8-13
8.1.2.9 Ion Exchange (in-process) 8-15
8.1.2.10 Reverse Osmosis 8-17
8.1.3 Other Types of Pollution Prevention Practices 8-19
8.2 Preliminary Treatment of Segregated Wastewater Streams 8-20
8.2.1 Chromium-Bearing Wastewater 8-20
8.2.2 Concentrated Metal-Bearing Wastewater 8-22
8.2.3 Cyanide-Bearing Wastewater 8-22
8.2.3.1 Alkaline Chlorination 8-22
8.2.3.2 Ozone Oxidation 8-23
8.2.4 Chelated Metal-Bearing Wastewater 8-24
8.2.4.1 Reduction to Elemental Metal 8-24
8.2.4.2 Precipitation of an Insoluble Compound 8-25
8.2.4.3 Physical Separation 8-26
8.2.5 Oil-Bearing Wastewater 8-26
8.2.5.1 Chemical Emulsion Breaking 8-26
8.2.5.2 Oil Skimming 8-28
8.2.5.3 Flotation of Oils or Solids 8-31
8.2.5.4 Ultrafiltration 8-32
8.3 End-of-Pipe Wastewater and Sludge Treatment Technologies 8-33
8.3.1 Metals Removal 8-33
8.3.1.1 Gravity Clarification for Solids Removal 8-38
8.3.1.2 Microfiltration for Solids Removal 8-40
8.3.2 Oil Removal 8-41

TABLE OF CONTENTS (Continued)

Page

8.3.3 Polishing Technologies 8-41
8.3.3.1 Multimedia Filtration 8-41
8.3.3.2 Activated Carbon Adsorption 8-42
8.3.3.3 Reverse Osmosis 8-43
8.3.3.4 Ion Exchange 8-43
8.3.4 Sludge Handling 8-43
8.3.4.1 Gravity Thickening 8-43
8.3.4.2 Pressure Filtration 8-44
8.3.4.3 Vacuum Filtration 8-45
8.3.4.4 Sludge Drying 8-47
8.4 References 8-47

9.0 TECHNOLOGY OPTIONS 9-1
9.1 Technology Evaluation Methods 9-1
9.2 Technology Options 9-3
9.2.1 General Metals, Metal Finishing Job Shops, Printed Wiring Boards, Steel Forming and Finishing, and Non-Chromium Anodizing Subcategories 9-3
9.2.2 Oily Wastes Subcategory 9-7
9.2.3 Shipbuilding Dry Dock and Railroad Line Maintenance Subcategories 9-8
9.3 References 9-9

10.0 LONG-TERM AVERAGES AND VARIABILITY FACTORS 10-1
10.1 Sources of Technology Performance Data 10-2
10.1.1 EPA Sampling Program 10-2
10.1.2 Sampling Episodes Conducted by Industry and Local Sanitation Districts 10-3
10.1.3 Industry-Supplied Effluent Monitoring Data 10-3
10.2 Evaluation of Treatment Effectiveness 10-4
10.2.1 Identification of Pollutants Not Present in the Raw Wastewater at Sufficient Concentrations to Evaluate Treatment Effectiveness 10-6
10.2.2 Assessment of General Treatment System Performance 10-8
10.2.3 Identification of Process Upsets That Could Affect Data Quality 10-10
10.2.4 Identification of Wastewater Treatment Chemicals 10-12
10.3 Development of Long-Term Averages and Variability Factors 10-12
10.3.1 Derivation of the Proposed Limitations 10-12
10.3.2 Steps Used to Derive Concentration-Based Limitations 10-14
10.3.3 Modified Delta-Lognormal Model 10-14
10.3.4 Estimation Under the Modified Delta-Lognormal Model . . . 10-16

TABLE OF CONTENTS (Continued)

Page

10.3.5 Estimation of LTAs and VFs (Data Groups) 10-17
10.3.6 Estimation of LTAs 10-17
10.3.7 Estimation of VFs 10-18
10.3.7.1 Estimation of 1-day VFs 10-18
10.3.7.2 Estimation of 4-day VFs 10-20
10.4 Methodology for Development of TOP Long-Term Averages and Variability Factors 10-23

11.0 COSTS OF TECHNOLOGY BASES FOR REGULATIONS 11-1
11.1 Summary of Costs 11-2
11.2 Model Site Development 11-5
11.2.1 Site Selection 11-5
11.2.2 Wastewater Stream Parameters 11-5
11.2.3 Pollutant Concentrations 11-6
11.2.4 Technology in Place 11-7
11.3 Methodology for Estimating Costs 11-9
11.3.1 Components of Cost 11-9
11.3.2 Sources and Standardization of Cost Data 11-11
11.3.3 MP&M Design and Cost Model 11-13
11.3.4 General Assumptions Made During the Costing Effort 11-19
11.4 Design and Costs of Individual Technologies 11-23
11.4.1 Countercurrent Cascade Rinsing 11-23
11.4.2 Centrifugation and Pasteurization of Machining Coolant . . . 11-30
11.4.3 Centrifugation of Painting Water Curtains 11-30
11.4.4 Contract Hauling 11-31
11.4.5 Feed Systems 11-32
11.4.6 Chemical Emulsion Breaking and Gravity Oil/Water Separation 11-33
11.4.7 Dissolved Air Flotation 11-34
11.4.8 Ultrafiltration System for Oil Removal 11-35
11.4.9 Batch Oil Emulsion Breaking with Gravity Flotation 11-36
11.4.10 Chemical Reduction of Hexavalent Chromium 11-36
11.4.11 Cyanide Destruction 11-37
11.4.12 Chemical Reduction/Precipitation of Chelated Metals 11-38
11.4.13 Chemical Precipitation 11-38
11.4.14 Slant-Plate Clarifier 11-39
11.4.15 Multimedia Filtration 11-40
11.4.16 Microfiltration for Solids Removal 11-40
11.4.17 Sludge Thickening 11-41
11.4.18 Sludge Pressure Filtration 11-41
11.5 References 11-42

TABLE OF CONTENTS (Continued)

Page

12.0 POLLUTANT LOADING AND REDUCTION ESTIMATES 12-1
12.1 Estimation of Unit Operation Pollutant Concentrations 12-3
12.1.1 Calculate Pollutant Concentrations for Each Sampling Point 12-3
12.1.2 Estimate Pollutant Concentrations for Each Unit Operation . . 12-4
12.2 Calculation of Industry Pollutant Loadings and Reductions 12-4
12.2.1 Industry Raw Wastewater Pollutant Loadings 12-5
12.2.2 Industry Baseline Pollutant Loadings 12-5
12.2.3 Option-Specific Industry Pollutant Loadings and Pollutant Reductions 12-6

13.0 NON-WATER QUALITY IMPACTS 13-1
13.1 Energy Requirements 13-1
13.2 Air Emissions Impacts 13-2
13.3 Solid Waste Generation 13-3
13.3.1 Wastewater Treatment Sludge 13-3
13.3.2 Waste Oil 13-5
13.4 References 13-6

14.0 EFFLUENT LIMITATIONS AND STANDARDS 14-1
14.1 Best Practicable Control Technology Currently Available (BPT) 14-1
14.1.1 BPT Technology Selection for General Metals Subcategory 14-5
14.1.2 BPT Technology Selection for Metal Finishing Job Shops Subcategory 14-7
14.1.3 BPT Technology Selection for Non-Chromium Anodizing Subcategory 14-10
14.1.4 BPT Technology Selection for Printed Wiring Board Subcategory 14-13
14.1.5 BPT Technology Selection for Steel Forming and Finishing Subcategory 14-16
14.1.6 BPT Technology Selection for the Oily Wastes Subcategory 14-25
14.1.7 BPT Technology Selection for the Railroad Line Maintenance Subcategory 14-27
14.1.8 BPT Technology Selection for the Shipbuilding Dry Dock Subcategory 14-29
14.2 Best Conventional Pollutant Control Technology (BCT) 14-31
14.2.1 BCT Option for Metal-Bearing Wastewater 14-31
14.2.2 BCT Option for Oil-Bearing Wastewater 14-32
14.3 Best Available Technology Economically Achievable (BAT) 14-32
14.3.1 BAT Technology Selection for the General Metals

TABLE OF CONTENTS (Continued)

Page

Subcategory 14-33
14.3.2 BAT Technology Selection for the Metal Finishing Job Shops Subcategory 14-34
14.3.3 BAT Technology Selection for the Non-Chromium Anodizing Subcategory 14-34
14.3.4 BAT Technology Selection for the Printed Wiring Board Subcategory 14-35
14.3.5 BAT Technology Selection for the Steel Forming and Finishing Subcategory 14-35
14.3.6 BAT Technology Selection for the Oily Wastes Subcategory 14-36
14.3.7 BAT Technology Selection for the Railroad Line Maintenance Subcategory 14-36
14.3.8 BAT Technology Selection for the Shipbuilding Dry Dock Subcategory 14-37
14.4 Pretreatment Standards for Existing Sources (PSES) 14-37
14.4.1 Overview of Options and Low-Flow Exclusions 14-38
14.4.2 PSES for General Metals Subcategory 14-40
14.4.3 PSES for the Metal Finishing Job Shops Subcategory 14-44
14.4.4 PSES for the Non-Chromium Anodizing Subcategory 14-48
14.4.5 PSES for the Printed Wiring Board Subcategory 14-48
14.4.6 PSES for the Steel Forming and Finishing Subcategory 14-51
14.4.7 PSES for the Oily Wastes Subcategory 14-58
14.4.8 PSES for the Railroad Line Maintenance Subcategory 14-61
14.4.9 PSES for the Shipbuilding Dry Dock Subcategory 14-61
14.5 New Source Performance Standards (NSPS) 14-61
14.5.1 NSPS for the General Metals Subcategory 14-62
14.5.2 NSPS for the Metal Finishing Job Shops Subcategory 14-63
14.5.3 NSPS for the Non-Chromium Anodizing Subcategory 14-66
14.5.4 NSPS for the Printed Wiring Board Subcategory 14-67
14.5.5 NSPS for the Steel Forming and Finishing Subcategory 14-68
14.5.6 NSPS for the Oily Wastes Subcategory 14-74
14.5.7 NSPS for the Railroad Line Maintenance Subcategory 14-74
14.5.8 NSPS for the Shipbuilding Dry Dock Subcategory 14-75
14.6 Pretreatment Standards for New Sources (PSNS) 14-75
14.6.1 PSNS for the General Metals Subcategory 14-76
14.6.2 PSNS for the Metal Finishing Job Shops Subcategory 14-77
14.6.3 PSNS for the Non-Chromium Anodizing Subcategory 14-79
14.6.4 PSNS for the Printed Wiring Board Subcategory 14-79
14.6.5 PSNS for the Steel Forming and Finishing Subcategory 14-80
14.6.6 PSNS for the Oily Wastes Subcategory 14-86
14.6.7 PSNS for the Railroad Line Maintenance Subcategory 14-86

TABLE OF CONTENTS (Continued)

Page

14.6.8 PSNS for the Shipbuilding Dry Dock Subcategory 14-86

15.0 PERMITTING GUIDANCE 15-1
15.1 Background 15-1
15.2 Implementing the MP&M Effluent Guidelines 15-5
15.2.1 Application of the Building Block Approach for Direct Dischargers 15-7
15.2.2 Application of the Combined Wastestream Formula for Indirect Dischargers 15-10
15.2.3 Production-Based Limits for the Steel Forming and Finishing Subcategory 15-12
15.2.4 Use of Site-Specific Historical Flow Data to Calculate Flow-Based Mass Limitations 15-15
15.2.5 Use of General MP&M Industry Flow Data to Develop Flow-Based Mass Limitations 15-16
15.2.6 Estimating Reasonable Production Rates 15-19
15.2.7 Monitoring Flexibility 15-24
15.3 Flow Guidance for Surface Treatment Rinsing Operations 15-27
15.3.1 Identification of Sites With Pollution Prevention and Water Conservation Practices 15-27
15.3.2 Influences on Flow Rates 15-38
15.3.3 Guidance for PNF Selection 15-39
15.4 Flow Guidance for Machining Operations 15-43
15.4.1 Identification of Sites With Pollution Prevention and Water Conservation Practices 15-43
15.4.2 Influences on Flow Rates 15-48
15.4.3 Guidance for PNF Selection 15-49
15.5 Flow Guidance for Painting Operations 15-50
15.5.1 Identification of Sites With Pollution Prevention and Water Conservation Practices 15-51
15.5.2 Influences on Flow Rates 15-56
15.5.3 Guidance for PNF Selection 15-57
15.6 Flow Guidance for Cleaning Operations 15-58
15.6.1 Identification of Sites With Pollution Prevention and Water Conservation Practices 15-58
15.6.2 Influences on Flow Rates 15-63
15.6.3 Guidance for PNF Selection 15-65
15.7 References 15-66

16.0 GLOSSARY/LIST OF ACRONYMS 16-1

LIST OF TABLES

		Page
1-1	Clarification of Coverage by MP&M Subcategory	1-4
1-2	Typical Unit Operations Performed at MP&M Sites	1-7
2-1	Summary of Regulatory Levels of Control	2-4
2-2	Summary of Metals Industry Effluent Guidelines	2-7
3-1	1989 and 1996 MP&M Survey Mailout Results	3-4
3-2	Summary of 1996 Detailed Survey Information by Question Number	3-16
3-3	Number of Sites Visited Within Each MP&M Sector	3-26
3-4	Number of Sites Sampled Within Each MP&M Sector	3-29
3-5	Metal Constituents Measured Under the MP&M Sampling Program	3-32
3-6	Organic Constituents Measured Under the MP&M Sampling Program	3-33
3-7	Additional Parameters Measured Under the MP&M Sampling Program	3-36
4-1	MP&M Wastewater-Discharging Sites by Sector	4-4
4-2	MP&M Unit Operations Listed by Type	4-12
4-3	Typical Unit Operations Performed at MP&M Sites	4-14
4-4	Additional Water-Using Unit Operations Performed at MP&M Sites	4-30
4-5	Number of MP&M Sites Discharging Process Wastewater by Unit Operation and Flow	4-32
5-1	Number of Process and Rinse Samples for Unit Operations That Generate Hexavalent Chromium-Bearing Wastewater	5-2
5-2	Summary of Analytical Data for Chromium From Unit Operations and Rinses Generating Chromium-Bearing Wastewater	5-3
5-3	Summary of Analytical Data for Chromium in Chromium-Bearing Raw Wastewater at Influent to Hexavalent Chromium Treatment	5-3

LIST OF TABLES (Continued)

		Page
5-4	Number of Process and Rinse Samples for Unit Operations That Generate Cyanide-Bearing Wastewater	5-4
5-5	Summary of Analytical Data for Cyanide from Unit Operations and Rinses Generating Cyanide-Bearing Wastewater	5-5
5-6	Summary of Analytical Data for Cyanide in Cyanide-Bearing Raw Wastewater at Influent to Cyanide Treatment	5-5
5-7	Number of Process and Rinse Samples For Unit Operations That Generate Oil-Bearing and/or Organic Pollutant-Bearing Wastewater	5-7
5-8	Analytical Data for Unit Operations Generating Oil-Bearing and/or Organic-Bearing Wastewater	5-8
5-9	Analytical Data for Rinses Generating Oil-Bearing and/or Organic-Bearing Wastewater	5-13
5-10	Analytical Data for Oil-Bearing and Organic Pollutant-Bearing Raw Wastewater Streams at Influent to Oil/Water Separation	5-16
5-11	Number of Process and Rinse Samples From Unit Operations That Generate General Metal-Bearing Wastewater	5-22
5-12	Analytical Data from Unit Operations Generating General Metal-Bearing Wastewater	5-23
5-13	Analytical Data from Rinses Generating General Metal-Bearing Wastewater	5-27
5-14	Analytical Data for General Metal-Bearing Treatment Influent Wastewater Streams	5-31
6-1	Proposed Subcategories	6-2
6-2	Percentage of Facilities Using Multiple Metal Types by Subcategory	6-4
6-3	Percentage of MP&M Facilities by Subcategory Using Each Metal Type	6-6
6-4	Unit Operations Performed by Oily Wastes Facilities	6-8
7-1	Priority Pollutant List	7-2

LIST OF TABLES (Continued)

		Page
7-2	Pollutant Parameters Not Detected in Any Samples Collected During the MP&M Sampling Program	7-5
7-3	Pollutant Parameters Detected in Less Than Three Samples Collected During the MP&M Sampling Program	7-7
7-4	Pollutant Parameters Detected at Average Concentrations of Less Than Five Times the Minimum Level During the MP&M Sampling Program	7-8
7-5	Pollutant Parameters Selected for Further Consideration Under the MP&M Proposed Rule	7-9
7-6	Pollutants Not Selected for Proposed Regulation for the Metal-Bearing Subcategories Because They Are Controlled Through the Regulation of Other Pollutants	7-14
7-7	Pollutants Not Selected for Proposed Regulation for the Metal-Bearing Subcategories Because They Are Present in Only Trace Amounts and/or Are Not Likely to Cause Toxic Effects	7-15
7-8	Pollutants Not Selected for Proposed Regulation for the Metal-Bearing Subcategories Because They May Serve as Treatment Chemicals in the MP&M Industry	7-16
7-9	Pollutants Not Selected for Proposed Regulation for the Metal-Bearing Subcategories Because They Are Not Controlled by the Selected BPT/BAT Technology	7-17
7-10	64 Remaining Pollutants Considered for Proposed Regulation for the Metal-Bearing Subcategories	7-18
7-11	Pollutants Not Selected for Proposed Regulation for the Oil-Bearing Subcategories Because They Are Controlled Through the Regulation of Other Pollutants	7-22
7-12	Pollutants Not Selected for Proposed Regulation for the Oil-Bearing Subcategories Because They Are Present in Only Trace Amounts and/or Are Not Likely to Cause Toxic Effects	7-23
7-13	Pollutants Not Selected for Proposed Regulation for the Oil-Bearing Subcategories Because They May Serve as Treatment Chemicals in the MP&M Industry	7-24

LIST OF TABLES (Continued)

		Page
7-14	Pollutants Not Selected for Proposed Regulation for the Oil-Bearing Subcategories Because They Are Not Controlled by the Selected BPT/BAT Technology	7-25
7-15	49 Remaining Pollutants Considered for Proposed Regulation for the Oil-Bearing Subcategories	7-25
7-16	Pass-Through Analysis Results for Existing Sources for Metal-Bearing Wastewater Subcategories	7-31
7-17	Pass-Through Analysis Results for New Sources for Metal-Bearing Wastewater Subcategories	7-33
9-1	EMH Tier 1 - MP&M Source Reduction and Pollution Prevention Technologies	9-10
9-2	EMH Tier 2 - MP&M Recycling Technologies	9-13
9-3	EMH Tiers 3 and 4 - MP&M End-of-Pipe Treatment and Disposal Technologies	9-15
9-4	Technology Options by Subcategory	9-20
10-1	Number of Evaluated Treatment Systems for Each Subcategory	10-24
10-2	Influent and Effluent Data Points from EPA Sampling Episodes	10-25
10-3	Influent and Effluent Data Points from Industry and Local Sanitation District Sampling Episodes	10-26
10-4	Industry-Supplied Effluent Monitoring Data	10-26
10-5	Number of Effluent Data Points Flagged for Each MP&M Technology Option	10-27
10-6A	MP&M Technology Effectiveness Concentrations for Total and Amenable Cyanide Destruction	10-28
10-6B	MP&M Technology Effectiveness Concentrations for General Metals and Steel Forming and Finishing Subcategories (Option 2)	10-29

LIST OF TABLES (Continued)

		Page
10-6C	MP&M Technology Effectiveness Concentrations for General Metals and Steel Forming and Finishing Subcategory (Option 4)	10-33
10-6D	MP&M Technology Effectiveness Concentrations for Metal Finishing Job Shops Subcategory (Option 2)	10-34
10-6E	MP&M Technology Effectiveness Concentrations for Nonchromium Anodizers Subcategory (Option 2)	10-36
10-6F	MP&M Technology Effectiveness Concentrations for Printed Wiring Boards Subcategory (Option 2)	10-36
10-6G	MP&M Technology Effectiveness Concentrations for Printed Wiring Boards Subcategory (Option 4)	10-37
10-6H	MP&M Technology Effectiveness Concentrations for Oily Wastes Subcategory (Option 6)	10-37
10-6I	MP&M Technology Effectiveness Concentrations for Railroad Line Maintenance Subcategory (Option 10)	10-38
10-6J	MP&M Technology Effectiveness Concentrations for Shipbuilding and Drydock Subcategory (Option 10)	10-39
10-7	Calculation of Total Organics Parameter (TOP) Limit	10-40
10-8A	Episode-Level Long-Term Averages and Variability Factors for Total and Amenable Cyanide Destruction (All Options for Applicable Subcategories)	10-42
10-8B	Episode-Level Long-Term Averages and Variability Factors for General Metals and Steel Forming and Finishing Subcategories (Option 2)	10-43
10-8C	Episode-Level Long-Term Averages and Variability Factors for General Metals and Steel Forming and Finishing Subcategories (Option 4)	10-47
10-8D	Episode-Level Long-Term Averages and Variability Factors for Metal Finishing Job Shops Subcategory (Option 2)	10-49
10-8E	Episode-Level Long-Term Averages and Variability Factors for Metal Finishing Job Shops (Option 4)	10-51

LIST OF TABLES (Continued)

		Page
10-8F	Episode-Level Long-Term Averages and Variability Factors for Nonchromium Anodizing Subcategory (Option 2)	10-53
10-8G	Episode-Level Long-Term Averages and Variability Factors for Printed Wiring Boards Subcategory (Option 2)	10-55
10-8H	Episode-Level Long-Term Averages and Variability Factors for Printed Wiring Boards Subcategory (Option 4)	10-57
10-8I	Episode-Level Long-Term Averages and Variability Factors for Oily Waste Subcategory (Option 6)	10-58
10-8J	Railroad Line Maintenance Subcategory (Option 10)	10-59
10-8K	Shipbuilding Dry Dock Subcategory (Option 10)	10-59
10-9A	Pollutant-Level Long-term Averages, Variability Factors and Limitations for General Metals Option 2	10-60
10-9B	Pollutant-Level Long-term Averages, Variability Factors and Limitations for General Metals Subcategory (Option 4)	10-61
10-9C	Pollutant-Level Long-term Averages, Variability Factors and Limitations for Metal Finishing Job Shops Subcategory (Option 2)	10-62
10-9D	Pollutant-Level Long-term Averages, Variability Factors and Limitations for Metal Finishing Job Shops Subcategory (Option 4)	10-63
10-9E	Pollutant-Level Long-term Averages, Variability Factors and Limitations for Non-Chromium Anodizing Subcategory (Option 2)	10-64
10-9F	Pollutant-Level Long-term Averages, Variability Factors and Limitations for Printed Wiring Boards (Option 2)	10-65
10-9G	Pollutant-Level Long-term Averages, Variability Factors and Limitations for Printed Wiring Boards (Option 4)	10-66
10-9H	Pollutant-Level Long-term Averages, Variability Factors and Limitations for Oily Wastes Subcategory (Option 6)	10-67
10-9I	Pollutant-Level Long-term Averages, Variability Factors and Limitations for Railroad Line Maintenance Subcategory (Option 10)	10-67

LIST OF TABLES (Continued)

		Page
10-9J	Pollutant-Level Long-term Averages, Variability Factors and Limitations for Shipbuilding Dry Docks Subcategory (Option 10)	10-68
11-1	MP&M Total Estimated Annualized Costs at the Proposed Options for Existing Sources	11-4
11-2	Components of Total Capital Investment	11-10
11-3	RSMeans Building Construction Historical Cost Indexes	11-13
11-4	Contract-Hauling Costs for Various Waste Types	11-13
11-5	Wastewater Treatment Technologies and Source Reduction and Recycling Practices for Which EPA Developed Cost Modules	11-14
11-6	List of Unit Operations Feeding Each Treatment Unit or In-Process Technology	11-15
11-7	Sedimentation and Oil Treatment Technologies Considered Treatment in Place for Various Technology Options	11-21
11-8	MP&M Equipment Cost Equations	11-25
12-1	Summary of Annual Pollutant Loadings for MP&M Direct Dischargers by Subcategory	12-8
12-2	Summary of Annual Pollutant Loadings for MP&M Indirect Dischargers by Subcategory	12-9
12-3	Publicly Owned Treatment Works (POTW) Removal Percents For Each MP&M Pollutants of Concern	12-10
12-4	Summary of Annual Pollutant Reductions for MP&M Direct Dischargers by Subcategory	12-15
12-5	Summary of Annual Pollutant Reductions for MP&M Indirect Dischargers by Subcategory	12-16
12-6	Top Pollutants Removed by Proposed Option for General Metals Direct Dischargers	12-17

LIST OF TABLES (Continued)

		Page
12-7	Top Pollutants Removed by Proposed Option for Metal Finishing Job Shops Direct Dischargers	12-19
12-8	Top Pollutants Removed by Proposed Option for Printed Wiring Board Direct Dischargers	12-21
12-9	Top Pollutants Removed by Proposed Option for Steel Forming and Finishing Direct Dischargers	12-22
12-10	Top Pollutants Removed by Proposed Option for Oily Wastes Direct Dischargers	12-24
12-11	Top Pollutants Removed by Proposed Option for Railroad Line Maintenance Direct Dischargers	12-25
12-12	Top Pollutants Removed by Proposed Option for Shipbuilding Dry Dock Direct Dischargers	12-26
12-13	Top Pollutants Removed by Proposed Option for General Metals Indirect Dischargers	12-27
12-14	Top Pollutants Removed by Proposed Option for Metal Finishing Job Shops Indirect Dischargers	12-29
12-15	Top Pollutants Removed by Option 2 for Non-Chromium Anodizing Indirect Dischargers	12-31
12-16	Top Pollutants Removed by Proposed Option for Printed Wiring Board Indirect Dischargers	12-32
12-17	Top Pollutants Removed by Proposed Option for Steel Forming and Finishing Indirect Dischargers	12-33
12-18	Top Pollutants Removed by Proposed Option for Oily Wastes Indirect Dischargers	12-35
12-19	Top Pollutants Removed by Option 10 for Railroad Line Maintenance Indirect Dischargers	12-36
12-20	Top Pollutants Removed by Option 10 for Shipbuilding Dry Dock Indirect Dischargers	12-37

LIST OF TABLES (Continued)

		Page
13-1	Energy Usage by Option	13-1
13-2	Wastewater Treatment Sludge by Option	13-4
13-3	Waste Oil Removed by Option	13-6
14-1	Pounds of Pollutants Removed by the Proposed BPT Option for Direct Dischargers by Subcategory	14-3
14-2	Annualized Costs and Economic Impacts of the Proposed BPT Option for Direct Dischargers by Subcategory	14-4
14-3	BPT/BAT Effluent Limitations for the General Metals Subcategory	14-7
14-4	BPT/BAT Effluent Limitations for the Metal Finishing Job Shops Subcategory	14-10
14-5	BPT/BAT Effluent Limitations for the Non-Chromium Anodizing Subcategory	14-13
14-6	BPT/BAT Effluent Limitations for the Printed Wiring Board Subcategory	14-15
14-7	Production Normalized Flows (PNF) for Steel Forming and Finishing	14-18
14-8	BPT/BAT Effluent Limitations for the Steel Forming and Finishing Subcategory	14-21
14-9	BPT/BAT Effluent Limitations for the Oily Wastes Subcategory	14-27
14-10	BPT Effluent Limitations for the Railroad Line Maintenance Subcategory	14-29
14-11	BPT Effluent Limitations for the Shipbuilding Dry Dock Subcategory	14-30
14-12	Annual Pounds of Pollutants Removed by the Proposed PSES Option for Indirect Dischargers by Subcategory	14-39
14-13	Annual Costs and Economic Impacts of the Proposed PSES Option for Indirect Dischargers by Subcategory	14-40
14-14	PSES for the General Metals Subcategory	14-43
14-15	PSES for the Metal Finishing Job Shops Subcategory	14-47

LIST OF TABLES (Continued)

		Page
14-16	PSES for the Printed Wiring Board Subcategory	14-50
14-17	PSES for the Steel Forming and Finishing Subcategory	14-53
14-18	PSES for the Oily Wastes Subcategory	14-60
14-19	NSPS for the General Metals Subcategory	14-63
14-20	NSPS for the Metal Finishing Job Shops Subcategory	14-65
14-21	NSPS for the Non-Chromium Anodizing Subcategory	14-67
14-22	NSPS for the Printed Wiring Board Subcategory	14-68
14-23	NSPS for the Steel Forming and Finishing Subcategory	14-70
14-24	PSNS for the General Metals Subcategory	14-77
14-25	PSNS for Metal Finishing Job Shops Subcategory	14-78
14-26	PSNS for the Printed Wiring Board Subcategory	14-80
14-27	PSNS for the Steel Forming and Finishing Subcategory	14-81
15-1 (a)	Descriptive Statistics of MP&M Survey Data for Unit Operations with Square Feet as the Production-Normalizing Parameter	15-68
15-1 (b)	Descriptive Statistics of MP&M Survey Data for Unit Operations with Pounds of Metal Removed as the Production-Normalizing Parameter	15-73
15-2	Water Conservation Methods for Surface Treatment Rinses	15-74
15-3	Definitions of Pollution Prevention and Water Conservation Practices and Technologies	15-76
15-4	Factors Affecting Drag-Out	15-81
15-5	Rinse-water Required for Various Plating Processes Based on Literature Values	15-82
15-6	Adjusted Production-Normalized Flow (PNF) Data for Countercurrent Cascade-Rinses	15-87

LIST OF TABLES (Continued)

Page

15-7 Pollution Prevention and Water Conservation Methods Applicable to Machining Operations 15-88

15-8 Pollution Prevention and Water Conservation Methods Applicable to Painting Operations 15-90

15-9 Pollution Prevention and Water Conservation Methods Applicable to Cleaning Operations 15-91

LIST OF FIGURES

		Page
3-1	Percentage of 1989 and 1996 MP&M Surveys Returned and Percentage of Survey Respondents Engaged in MP&M Unit Operations	3-5
3-2	Number of MP&M Sites Visited and Sampled by Industrial Sector	3-27
4-1	MP&M Wastewater-Discharging Sites by Number of Employees and Estimated Total Discharge Flow	4-2
4-2	Estimated Number of MP&M Facilities by EPA Region	4-3
4-3	MP&M Wastewater-Discharging Sites and Total Discharge Flow by Activity	4-5
4-4	MP&M Wastewater-Discharging Sites and Total Discharge Flow by Discharge Status	4-6
4-5	MP&M Wastewater-Discharging Sites by Total Discharge Flow	4-7
4-6	Number of Screener Survey Respondents Utilizing Each Zero Discharge Method	4-9
4-7	Number of MP&M Wastewater-Discharging Sites by Number of Metal Types Processed	4-31
6-1	Percentage of Wastewater-Discharging Facilities by Decade Built	6-10
8-1	Countercurrent Cascade Rinsing	8-2
8-2	Machine Coolant Recycling System	8-9
8-3	Centrifugation and Recycling of Painting Water Curtains	8-10
8-4	Electrodialysis Cell	8-11
8-5	Membrane Filtration Unit	8-14
8-6	Ion Exchange	8-15
8-7	Chemical Reduction of Hexavalent Chromium	8-21
8-8	Cyanide Destruction Through Alkaline Chlorination	8-23

LIST OF FIGURES (Continued)

		Page
8-9	Chemical Reduction / Precipitation of Chelated Metals	8-25
8-10	Continuous Chemical Emulsion Breaking Unit with Coalescing Plates	8-27
8-11a	Disc Oil Skimming Unit	8-29
8-11b	Belt Oil Skimming Unit	8-30
8-12	Dissolved Air Flotation Unit	8-32
8-13	Continuous Chemical Precipitation System with Lamella Clarifier	8-35
8-14	Effect of pH on Hydroxide and Sulfide Precipitation	8-36
8-15	Clarifier	8-39
8-16	Multimedia Filtration System	8-42
8-17	Gravity Thickening	8-44
8-18	Plate-and-Frame Filter Press	8-45
8-19	Rotary Vacuum Filter	8-46
9-1	End-of-Pipe Treatment Train for Options 1 and 2 Considered for the Following Subcategories: General Metals, Metal Finishing Job Shops, Non-Chromium Anodizing, Printed Wiring Boards, and Steel Forming and Finishing	9-21
9-2	In-Process Water Use Reduction Technologies for Options 2 and 4 Considered for the Following Subcategories: General Metals, Metal Finishing Job Shops, Non-Chromium Anodizing, Printed Wiring Boards, and Steel Forming and Finishing	9-22
9-3	End-of-Pipe Treatment Train for Options 3 and 4 Considered for the Following Subcategories: General Metals, Metal Finishing Job Shops, Non-Chromium Anodizing, Printed Wiring Boards, and Steel Forming and Finishing	9-23
9-4	End-of-Pipe Treatment Train for Options 5 and 6 Considered for the Oily Wastes Subcategory	9-24

LIST OF FIGURES (Continued)

		Page
9-5	End-of-Pipe Treatment Train for Option 7 and 8 Considered for the Following Subcategories: Oily Wastes, Railroad Line Maintenance, Shipbuilding Dry Dock	9-25
9-6	End-of-Pipe Treatment Train for Options 9 and 10 Considered for the Railroad Line Maintenance and Shipbuilding Dry Dock Subcategories	9-26
10-1	Summary of Technology Performance Data-Editing Procedures	10-5
10-2	Modified Delta-Lognormal Model	10-15
11-1	Relationship Between In-Process and End-of-Pipe Technologies and Practices	11-43
11-2	Components of Total Capital Investment	11-44
11-3	Logic Used to Apply End-of-Pipe Technologies and Practices for the Following Subcategories: General Metals, Metal Finishing Job Shops, Non-Chromium Anodizing, Printed Wiring Board, and Steel Forming and Finishing	11-45
11-4	Logic Used to Apply End-of-Pipe Technologies and Practices for the Following Subcategories: Oily Waste, Railroad Line Maintenance, and Shipbuilding Dry Dock	11-46
12-1	Estimates of MP&M Pollutant Loadings and Reductions	12-2
15-1	MP&M Permitting Process Flow Chart	15-8
15-2a	Single Rinse Tank	15-35
15-2b	Single Rinse Tank with Flow Reduction	15-35
15-2c	Multiple Rinse Tanks with Flow Reduction	15-36
15-2d	Countercurrent Rinsing with Flow Reduction	15-36
15-2e	Multiple Rinse Tanks with Flow Reduction and Drag-Out Recovery	15-37
15-2f	Multiple Rinse Tanks with Water Recycle, Drag-Out Recovery, and Metal Recovery	15-37

1.0 SUMMARY AND SCOPE OF THE REGULATION

Pursuant to the Clean Water Act (CWA), EPA is proposing effluent limitations guidelines and standards for the Metal Products and Machinery (MP&M) Point Source Category. This document and the administrative record for this rulemaking provide the technical basis for these effluent limitations guidelines and pretreatment standards. Direct discharging facilities discharge wastewater to a surface water (e.g., lake, river, ocean). Indirect discharging facilities discharge wastewater to a publicly owned treatment works (POTW).

Section 1.1 presents an overview of the MP&M Point Source Category. Section 1.2 describes the applicability of the MP&M proposal and how it overlaps with previously promulgated metals regulations. Section 1.3 summarizes the proposed effluent limitations guidelines and standards.

1.1 Overview of the MP&M Point Source Category

The MP&M Point Source Category includes sites that generate wastewater as a result of processing metal parts, metal products, and machinery. Although facilities in the MP&M industry produce a wide range of products, the operations performed can be described by two types of activities: manufacturing, and rebuilding/maintenance. Manufacturing is the series of unit operations necessary to produce metal products, and is generally performed in a production environment. Rebuilding/maintenance is the series of unit operations necessary to disassemble used metal products into components, replace the components or subassemblies or restore them to original function, and reassemble the metal product. These operations are intended to keep metal products in operating condition and can be performed in either a production or a non-production environment. These manufacturing and rebuilding/maintenance activities occur in industrial sectors including:

- Aerospace;
- Aircraft;
- Bus and Truck;
- Electronic Equipment;
- Hardware;
- Household Equipment;
- Instruments;
- Job Shops;
- Mobile Industrial Equipment;
- Motor Vehicle;
- Office Machine;
- Ordnance;
- Precious Metals and Jewelry;
- Printed Wiring Boards;
- Railroad;
- Ships and Boats;
- Stationary Industrial Equipment; and

- Miscellaneous Metal Products.

EPA has identified these 18 industrial sectors in the MP&M category; these sectors manufacture, maintain and rebuild metal products under more than 200 different SIC codes. EPA does not intend to include maintenance or repair of metal parts, products, or machines that occur only as ancillary activities at facilities that it did not include in the 18 industrial sectors. EPA believes that these ancillary repair and maintenance activities would typically generate only small quantities of wastewater. As an example, EPA does not intend for the MP&M proposal to include process wastewater discharges from an on-site machine or maintenance shop at a facility engaged in the manufacture of organic chemicals when the facility operates that shop to maintain the equipment related to manufacturing their products (i.e., organic chemicals). Alternatively, since aircraft is an industrial sector that the Agency considered in developing the MP&M proposal, EPA is proposing to include process wastewater discharges from activities related to maintaining or repairing aircraft or other related (metal) equipment (e.g., deicing vehicles) at airports. EPA also intends to cover wastewater from MP&M operations related to maintenance and repair of metal products, parts, and machinery at military installations.

The MP&M industry includes almost 90,000 sites, of which an estimated 63,000 discharge process wastewater. Of the facilities discharging process wastewater, EPA estimates that 93 percent are indirect dischargers and 7 percent are direct dischargers. The Agency estimates that there are approximately 26,000 facilities that fall into one of three categories: zero discharge, non-water-using, or contract haulers.

MP&M sites perform a wide variety of process unit operations on metal parts, products or machines. In general, MP&M unit operations can be characterized as belonging to one of the following types of unit operations:

- Assembly/disassembly operations;
- Metal deposition operations;
- Metal shaping operations;
- Organic deposition operations;
- Printed wiring board operations;
- Surface finishing operations;
- Surface preparation operations; and
- Dry dock operations.

At a given MP&M site, the specific unit operations performed, and the sequence of those operations, depend on many factors, including the activity (i.e., manufacturing, rebuilding, or maintenance), industrial sector, and type of product processed. The extent to which a facility uses process water for these unit operations may vary from site to site.

EPA estimates that MP&M sites discharge approximately 120 billion gallons of process wastewater per year. This wastewater typically contains metal pollutants (e.g., cadmium, copper, chromium, iron, nickel, zinc) and total suspended solids. MP&M wastewater may also contain oil and grease, cyanide, hexavalent chromium, and organic pollutants.

EPA identified several in-process pollution prevention, recycling, and end-of-pipe treatment technologies and practices to control the discharge of pollutants from MP&M facilities. Section 8.0 presents a more comprehensive discussion of standard in-process pollution prevention, recycling, and end-of-pipe treatment technologies and practices and Section 9.0 describes the technology options that EPA analyzed for the proposed rule.

EPA estimated engineering compliance costs for each of the technology options for a set of statistically selected model sites, and then used these sites to estimate compliance costs for the entire MP&M industry. The Agency also estimated pollutant loadings and removals associated with each of the technology options. EPA used the loadings and removals to assess the effectiveness of each technology option. The Agency used the costs to estimate the financial impact on the industry of implementing the various options, including the number of potential facility closures, potential job losses and gains, and the ability of the site to finance the pollution controls (see "Economic, Environmental, and Benefits Analysis of the Proposed Metal Products & Machinery Rule" [EPA-821-B-008].) Details on the cost-effectiveness analysis can be found in the document "Cost-Effectiveness Analysis of the Proposed Effluent Limitations Guidelines and Standards for the Metal Products & Machinery Point Source Category." [EPA-821-B-00-007]

1.2 Applicability of MP&M and Overlap with Other Effluent Guidelines

EPA has previously established effluent limitations guidelines and standards for 13 industries that may perform unit operations or process parts that are sometimes found at MP&M sites. These effluent guidelines are:

- Electroplating (40 CFR Part 413);
- Iron & Steel Manufacturing (40 CFR Part 420);
- Nonferrous Metals Manufacturing (40 CFR Part 421);
- Ferroalloy Manufacturing (40 CFR Part 424);
- Metal Finishing (40 CFR Part 433);
- Battery Manufacturing (40 CFR Part 461);
- Metal Molding & Casting (40 CFR Part 464);
- Coil Coating (40 CFR Part 465);
- Porcelain Enameling (40 CFR Part 466);
- Aluminum Forming (40 CFR Part 467);
- Copper Forming (40 CFR Part 468);
- Electrical & Electronic Components (40 CFR Part 469); and
- Nonferrous Metals Forming & Metal Powders (40 CFR Part 471).

In 1986, the Agency reviewed coverage of these regulations and identified a significant number of metals processing facilities discharging wastewater that these 13 regulations did not cover. Based on this review, EPA performed a more detailed analysis of these unregulated sites and identified the discharge of significant amounts of pollutants. This analysis resulted in the decision to develop national limitations and standards for the "Metal Products and Machinery" (MP&M) point source category. In general, when unit operations and their associated wastewater discharges are already covered by an existing effluent guideline, they will remain covered under that effluent guideline. However, EPA is proposing to replace the existing Electroplating (40 CFR

413) and Metal Finishing (40 CFR 433) effluent guidelines with the MP&M regulations for all facilities in the Printed Wiring Board Subcategory and the Metal Finishing Job Shops Subcategory (see Section 6.0 for a discussion on subcategorization). When a facility covered by existing metals effluent guidelines (other than Electroplating or Metal Finishing) discharges wastewater from unit operations not covered under those existing metals guidelines but covered under MP&M, the facility will need to comply with both regulations.

EPA has determined that some processes regulated under the 1982 Iron and Steel Category would be more appropriately regulated under the MP&M Category. The Agency proposes to include the following steel finishing operations in the MP&M Category: cold forming and surface finishing (e.g., electroplating) of steel bar, rod, wire, pipe, or tube; hot-dip coating of steel (except for hot dip coating of steel sheets, strips, or plates); and drawing and coating of steel wire. The Agency has determined that these operations are more similar to operations performed at MP&M facilities than to operations performed at iron and steel manufacturing facilities. This proposed regulation is not covering any hot forming operations or cold forming and surface finishing operations on steel sheets, strips or plates. Such operations on steel sheets, strips, or plates will remain regulated under the Iron and Steel Point Source Category (40CFR 420). If a facility discharges wastewater from operations covered under both the Iron and Steel guideline and the MP&M guideline, the facility will need to comply with both regulations.

Table 1-1 below summarizes the coverage of industrial operations by each MP&M subcategory.

Table 1-1

Clarification of Coverage by MP&M Subcategory

Subcategory	Proposing to continue to cover under 40 CFR Part 413 (Electroplating)	Proposing to continue to cover under 40 CFR Part 433 (Metal Finishing)	Proposing to cover under 40 CFR Part 438 (Metal Products & Machinery)
General Metals	Existing facilities that are currently covered by 413 AND are indirect dischargers that introduce less than or equal to 1 million gallons per year into a POTW.	Existing facilities that are currently covered (or new facilities that would be covered) by 433 AND are indirect dischargers that introduce less than or equal to 1 million gallons per year into a POTW.	All new and existing direct dischargers in this subcategory regardless of annual wastewater discharge volume and all new and existing indirect dischargers in this subcategory with annual wastewater discharges greater that 1 million gallons per year. (See 438.10)

Table 1-1 (Continued)

Subcategory	Proposing to continue to cover under 40 CFR Part 413 (Electroplating)	Proposing to continue to cover under 40 CFR Part 433 (Metal Finishing)	Proposing to cover under 40 CFR Part 438 (Metal Products & Machinery)
Metal Finishing Job Shops	None (see non-chromium anodizing)	None (see non-chromium anodizing)	All new and existing direct and indirect discharges under this subcategory. These facilities would no longer be covered by 413 or 433. (See 438.20)
Non-Chromium Anodizers **Note:** *Facilities that perform anodizing with chromium or with the use of dichromate sealants (or commingle their non-chromium anodizing process wastewater with wastewater from other MP&M subcategories) will be covered by 40CFR 438.*	Existing indirect dischargers that are currently covered by 413 AND that only perform non-chromium anodizing (or do not commingle their non-chromium anodizing wastewater with other process wastewater for discharge).	New and existing indirect dischargers (not covered by 413) that only perform non-chromium anodizing (or do not commingle their non-chromium anodizing wastewater with other process wastewater for discharge).	Existing and new direct dischargers that only perform non-chromium anodizing (or do not commingle their non-chromium anodizing wastewater with other process wastewater for discharge). (See 438.30)
Printed Wiring Board (Printed Circuit Board)	None	None	All new and existing direct and indirect discharges under this subcategory. These facilities would no longer be covered by 413 or 433. (See 438.40)
Steel Forming & Finishing	N/A	N/A	All new and existing direct and indirect discharges under this subcategory as described. (See 438.50)

Table 1-1 (Continued)

Subcategory	Proposing to continue to cover under 40 CFR Part 413 (Electroplating)	Proposing to continue to cover under 40 CFR Part 433 (Metal Finishing)	Proposing to cover under 40 CFR Part 438 (Metal Products & Machinery)
Oily Wastes	N/A	N/A	All new and existing direct and indirect dischargers under this subcategory as described. (See 438.60). (This subcategory excludes new and existing indirect dischargers that introduce less than or equal to 2 MGY into a POTW. Facilities under the cutoff are not and will not be covered by national categorical regulations).
Railroad Line Maintenance	N/A	N/A	All new and existing direct dischargers under this subcategory as described. (See 438.70) There are no national categorical pretreatment standards for these facilities.
Shipbuilding Dry Docks	N/A	N/A	All new and existing direct dischargers under this subcategory as described. (See 438.80) There are no national categorical pretreatment standards for these facilities.

N/A: Not applicable.

1.3 Proposed Effluent Limitations Guidelines and Standards

The MP&M effluent guidelines apply to process wastewater discharges from existing or new industrial sites engaged in manufacturing, rebuilding, or maintenance of metal parts, products or machines to be used in one of the industrial sectors listed in Section 1.1. The effluent guidelines only cover process wastewater generated at MP&M facilities. EPA is not covering non-process wastewater which includes sanitary wastewater, non-contact cooling water, and stormwater.

Typical unit operations at MP&M facilities include any one or more of the following:

Table 1-2

Typical Unit Operations Performed at MP&M Sites

Unit Operation Name	
1. Abrasive Blasting	24. Electroplating without Chromium or Cyanide
2. Abrasive Jet Machining	25. Electropolishing
3. Acid Treatment with Chromium	26. Floor Cleaning
4. Acid Treatment without Chromium	27. Grinding
5. Alkaline Cleaning for Oil Removal	28. Heat Treating
6. Alkaline Treatment with Cyanide	29. Impact Deformation
7. Alkaline Treatment without Cyanide	30. Machining
8. Anodizing with Chromium	31. Metal Spraying
9. Anodizing without Chromium	32. Painting - Spray or Brush
10. Aqueous Degreasing	33. Painting - Immersion
11. Assembly/Disassembly	34. Plasma Arc Machining
12. Barrel Finishing	35. Polishing
13. Burnishing	36. Pressure Deformation
14. Chemical Conversion Coating without Chromium	37. Salt Bath Descaling
15. Chemical Milling	38. Soldering/Brazing
16. Chromate Conversion Coating	39. Solvent Degreasing
17. Corrosion Preventive Coating	40. Stripping (paint)
18. Electrical Discharge Machining	41. Stripping (metallic coating)
19. Electrochemical Machining	42. Testing
20. Electroless Plating	43. Thermal Cutting
21. Electrolytic Cleaning	44. Washing Finished Products
22. Electroplating with Chromium	45. Welding
23. Electroplating with Cyanide	46. Wet Air Pollution Control

Source: MP&M survey database.

Numerous sub-operations within those listed above are also included. Many of these operations frequently have associated rinses that remove materials that preceding processes deposit on the surface of the workpiece and water-discharging air pollution control devices which become contaminated with process contaminants removed from the air. EPA is including both of these wastewater flows under the scope of the regulation.

The Agency is also including wastewater discharges from non-contact, nondestructive testing performed at MP&M facilities. EPA is not covering wastewater generated from electroplating-type operations during semiconductor wafer manufacturing or wafer fabrication processes occurring in a “clean room” environment because it believes that these operations are much different than the other electroplating operations that EPA is covering by these guidelines and do not contribute significant amounts of pollutants to the wastewater discharge.

EPA is proposing to cover wastewater generated from washing vehicles only when it occurs as a preparatory step prior to performing an MP&M unit operation (e.g., prior to disassembly to perform engine maintenance or rebuilding). EPA is also proposing to cover wastewater generated from unit operations performed by drum reconditioners/refurbishers to prepare drums for reuse. EPA did not collect information with respect to MP&M operations at gasoline service stations, passenger car rental facilities, or utility trailer and recreational vehicle rental facilities; therefore, this proposed regulation does not cover process wastewater generated by maintenance and repair activities when they occur at gasoline stations or car rental facilities.

EPA is proposing to exclude facilities in the General Metals and Oily Wastes Subcategories that discharge MP&M process wastewater below a specified flow rate (one and two million gallons per year, respectively). The Agency expects that many facilities that only perform repair and maintenance activities (e.g., auto repair shops, light aircraft maintenance) will be excluded as most will fit into the applicability of the either the General Metals or Oily Waste Subcategories and have process wastewater discharges below the subcategory-specific flow cutoffs. EPA is considering a higher flow cutoff (three million gallons per year) for the Oily Wastes Subcategory for the final regulation, and it solicits comment on appropriate flow cutoff levels for all subcategories in the preamble.

EPA is proposing to cover MP&M process wastewater at mixed-use facilities (i.e., any municipal, private, U.S. military or federal facility which contains both industrial and commercial/administrative buildings at which one or more industrial sites conduct MP&M operations within the facility's boundaries). The Agency is not proposing to cover wastewater from non-metal repair, maintenance or manufacturing operations at mixed use facilities such as wastewater from residential housing, schools, churches, recreational parks, shopping centers, gas stations, utility plants, and hospitals. Therefore, EPA is proposing to allow wastewater generated at different sites within a mixed use facility to be considered as separate discharges for the purpose of applying the appropriate low flow cutoff (when applicable).

EPA may divide a point source category (e.g., MP&M) into groupings called "subcategories" to provide a method for addressing variations between products, raw materials, processes, and other factors which result in distinctly different effluent characteristics. Regulation of a category by using formal subcategories provides that each subcategory has a uniform set of effluent limitations which take into account technological achievability and economic impacts unique to that subcategory. One result of grouping similar facilities into subcategories is the increased likelihood that the regulations are practicable, and it diminishes the need to address variations between facilities through a variance process. The CWA requires EPA, in developing effluent limitations guidelines and pretreatment standards, to consider a number of different subcategorization factors. (See Section 6.0 for a list of the factors considered for the proposed MP&M rule and a detailed discussion of subcategorization).

As a result of the subcategorization analysis, EPA identified 8 distinct subcategories: General Metals, Metal Finishing Job Shops, Non-Chromium Anodizing, Oily Wastes, Printed Wiring Boards, Railroad Line Maintenance, Shipbuilding Dry Docks, and Steel Forming and Finishing.

In the 1995 proposal, EPA proposed concentration-based limits for a portion of the MP&M Point Source Category with the requirement that control authorities (e.g., POTWs) implement them as mass-based limits. The Agency did not finalize that proposal and, instead, has proposed this regulation covering the entire MP&M Point Source Category. EPA proposed requiring this conversion to mass-based limits because the Agency believed that it was necessary to ensure the use of water conservation and pollution prevention practices similar to those that were part of EPA's selected option (60 FR 28230). EPA received comments on the administrative burden on POTWs associated with implementation of mass-based limits, largely due to the fact that most MP&M facilities do not collect production information on a wastestream-by-wastestream basis. EPA is again proposing concentration-based limits (for all but one subcategory--Steel Forming & Finishing); however, the Agency is no longer requiring control authorities (e.g., POTWs) or permit writers to implement the limits on a mass basis. Instead EPA authorizes control authorities and permit writers to decide when it is most appropriate to implement mass-based limits. EPA believes that this approach will reduce implementation burden on POTWs and will result in increased use of water conservation practices at the facilities where POTWs and permit writers think it is most needed.

The proposed limitations are presented in Section 14.0 for each subcategory, and Section 15.0 provides guidance to permit writers on the conversion of concentration-based limits to mass-based limits.

2.0 BACKGROUND

This section presents background information supporting the development of effluent limitations guidelines and standards for the Metal Products and Machinery (MP&M) Point Source Category. Section 2.1 presents the legal authority to regulate the MP&M industry. Section 2.2 discusses the Clean Water Act, Pollution Prevention Act, Regulatory Flexibility Act (as amended by the Small Business Regulatory Enforcement Fairness Act of 1996), and prior regulation of the MP&M industry.

2.1 Legal Authority

EPA is proposing this regulation under the authorities of Sections 301, 304, 306, 307, 308, 402 and 501 of the Clean Water Act, 33 U.S.C. Sections 1311, 1314, 1316, 1317, 1318, 1342 and 1361 and under authority of the Pollution Prevention Act of 1990 (PPA), 42 U.S.C. 13101 et seq., Pub L. 101-508, November 5, 1990.

2.2 Regulatory Background

2.2.1 Clean Water Act

Congress adopted the Clean Water Act (CWA) to "restore and maintain the chemical, physical, and biological integrity of the nation's waters" (Section 101(a), 33 U.S.C.1251(a)). EPA accomplishes this goal in part by restricting the types and amounts of pollutants discharged from various industrial, commercial, and public sources of wastewater. Direct dischargers must comply with effluent limitations in National Pollutant Discharge Elimination System ("NPDES") permits; indirect dischargers must comply with pretreatment standards for pollutants which may pass through or interfere with POTW operations. EPA establishes these limitations and standards by regulation for categories of industrial dischargers and bases them on the degree of control that can be achieved using various levels of pollution control technology. These guidelines and standards are summarized briefly below.

1. Best Practicable Control Technology Currently Available (BPT) (Section 304(b)(1) of the CWA).

   BPT effluent limitations guidelines are applicable to direct dischargers (i.e., sites that discharge wastewater to surface water). BPT effluent limitations guidelines are generally based on the average of the best existing performance by facilities of various sizes, ages, unit processes or other common characteristics within the category or subcategory for control of conventional, priority, and non-conventional pollutants.

   In establishing BPT effluent limitations guidelines, EPA first considers the total cost of achieving effluent pollutant reductions in relation to the effluent pollutant reduction benefits. The agency also considers the age of equipment and facilities involved, the processes employed, process

changes required, engineering aspects of the control technologies, non-water quality environmental impacts (including energy requirements), and other factors as the Agency deems appropriate. The Agency considers the category- or subcategory-wide cost of applying the technology in relation to the effluent pollutant reduction benefits. Where existing performance is uniformly inadequate, EPA may require higher levels of control than currently in place in an industrial category if the Agency determines that the technology can be practically applied.

2. Best Available Technology Economically Achievable (BAT) (Sections 304(b)(2)(B) of the CWA).

BAT effluent limitations guidelines are applicable to direct discharging sites. In general, BAT effluent limitations guidelines represent the best existing economically achievable performance of plants in the industrial subcategory or category. The CWA establishes BAT as the principal national means of controlling the direct discharge of priority pollutants and nonconventional pollutants to waters of the United States. The factors considered in assessing BAT include the cost of achieving BAT effluent reductions, the age of equipment and facilities involved, the processes employed, engineering aspects of the control technology, potential process changes, non-water quality environmental impacts (including energy requirements), and such factors as the Administrator deems appropriate. The Agency retains considerable discretion in assigning the weight to be accorded to these factors. An additional statutory factor considered in setting BAT is economic achievability. Generally, EPA determines the economic achievability on the basis of the total cost to the industrial subcategory and the overall effect of the rule on the industry's financial health. As with BPT, where existing performance is uniformly inadequate, EPA may base BAT upon technology transferred from a different subcategory within an industry or from another industrial category. In addition, BAT may include process changes or internal controls, even when these technologies are not common industry practice.

3. Best Conventional Pollutant Control Technology (BCT) (Section 304(b)(4) of the CWA).

The 1977 Act included Section 301(b)(2)(E), which established BCT for discharges of conventional pollutants from existing industrial point sources. BCT effluent limitations guidelines are applicable to direct discharging sites. Section 304(a)(4) designated the following as conventional pollutants: biochemical oxygen demand (BOD_5), total suspended solids (TSS), fecal coliform, pH, and any additional pollutants defined by the Administrator as conventional. The Administrator designated oil and grease as an additional conventional pollutant on July 30, 1979 (44 FR 44501).

BCT is not an additional limitation, but replaces BAT for the control of conventional pollutants. In addition to other factors specified in Section 304(b)(4)(B), the CWA requires that EPA establish BCT limitations after consideration of a two- part "cost-reasonableness" test. EPA explained its methodology for the development of BCT limitations in 1986 (51 FR 24974, July 9, 1986).

4. New Source Performance Standards (NSPS)
(Section 306 of the CWA).

NSPS are applicable to new direct discharging sites and are based on the best available demonstrated treatment technology. New facilities have the opportunity to install the best and most efficient production processes and wastewater treatment technologies. As a result, NSPS should represent the greatest degree of effluent reduction attainable through the application of the best available demonstrated control technology for all pollutants (i.e., conventional, nonconventional, and priority pollutants). In establishing NSPS, the CWA directs EPA to take into consideration the cost of achieving the effluent pollutant reduction and any non-water quality environmental impacts (including energy requirements).

5. Pretreatment Standards for Existing Sources (PSES)
(Section 307(b) of the CWA).

PSES are applicable to indirect discharging sites (i.e., sites that discharge to a publicly owned treatment works (POTW)). The CWA requires PSES for pollutants that pass through, interfere with, or are otherwise incompatible with POTW treatment processes or sludge disposal methods. The CWA specifies that pretreatment standards are to be technology-based and analogous to the BAT effluent limitations guidelines.

The General Pretreatment Regulations, which set forth the framework for implementing categorical pretreatment standards, are found at 40 CFR Part 403. Those regulations contain a definition of pass-through that addresses local rather than national instances of pass-through and establish pretreatment standards that apply to all non-domestic dischargers (52 FR 1586, January 14, 1987).

6. Pretreatment Standards for New Sources (PSNS)
(Section 307(b) of the CWA).

PSNS are applicable to new indirect discharging sites. Like PSES, PSNS are designed to prevent the discharges of pollutants that pass through, interfere with, or are otherwise incompatible with the operation of POTWs. PSNS are to be issued at the same time as NSPS. New indirect dischargers have the opportunity to incorporate into their plants the best available

demonstrated technologies. The Agency considers the same factors in promulgating PSNS that it considers in promulgating NSPS.

The following table summarizes these regulatory levels of control and the pollutants controlled.

Table 2-1

Summary of Regulatory Levels of Control

Type of Sites Regulated	BPT	BAT	BCT	NSPS	PSES	PSNS
Existing Direct Dischargers	X	X	X			
New Direct Dischargers				X		
Existing Indirect Dischargers					X	
New Indirect Dischargers						X
Pollutants Regulated	**BPT**	**BAT**	**BCT**	**NSPS**	**PSES**	**PSNS**
Priority Toxic Pollutants	X	X		X	X	X
Nonconventional Pollutants	X	X		X	X	X
Conventional Pollutants	X		X	X		

Source: Clean Water Act.

2.2.2 Section 304(m) Requirements

Section 304(m) of the Clean Water Act (33 U.S.C. 1314(m)), added by the Water Quality Act of 1987, requires EPA to establish schedules for (1) reviewing and revising existing effluent limitations guidelines and standards ("effluent guidelines"), and (2) promulgating new effluent guidelines. On January 2, 1990, EPA published an Effluent Guidelines Plan (55 FR 80), in which it established schedules for developing new and revised effluent guidelines for several industrial categories. In this notice, the Agency identified the Metal Products and Machinery (formerly referred to as Machinery Manufacturing and Rebuilding) Point Source Category as requiring effluent guidelines, and identified an estimated schedule for regulatory action.

The Natural Resources Defense Council, Inc. (NRDC) and Public Citizen, Inc. challenged the Effluent Guidelines Plan in a suit filed in U.S. District Court for the District of Columbia (NRDC et al. v. Reilly, Civ. No. 89-2980). The plaintiffs charged that EPA's plan did not meet the requirements of Section 304(m). A Consent Decree in this litigation was entered by the Court on January 31, 1992. The terms of the Consent Decree are reflected in the Effluent Guidelines Plan published on September 8, 1992 (57 FR 41000). As a result of this decree, EPA established a plan to propose effluent guidelines for the MP&M Point Source Category. As discussed further in Section 2.2.5, EPA initially divided the industry into two phases based on industrial sector. The 1992 Effluent Guidelines Plan scheduled EPA to propose the MP&M Phase I Category by November 1994, and take final action by May 1996. EPA filed a motion with the

court on September 28, 1994, and the court granted an extension for proposal and promulgation of the final regulation.

On May 30, 1995, EPA published the MP&M Phase I proposal (60 FR 28210). EPA received a large number of public comments on the Phase I proposal requesting that the Agency combine all MP&M industrial sectors into one effluent guideline (see Section 2.2.5). Based on these comments and after negotiations with NRDC, EPA filed an unopposed motion in the U.S. District Court for the District of Columbia to modify the Consent Decree to merge the two phases of the MP&M effluent guideline and to modify the dates for proposal and final action (61 FR 35042; July 3,1996). The court approved the motion, and the modified dates for the combined MP&M regulation are October 2000 for proposal and December 2002 for final action (62 FR 8726; February 26,1997).

2.2.3 Pollution Prevention Act

The Pollution Prevention Act of 1990 (42 U.S.C. 13101 et seq., Pub.L. 101-508, November 5, 1990), makes pollution prevention the national policy of the United States. This act identifies an environmental management hierarchy in which pollution "should be prevented or reduced whenever feasible; pollution that cannot be prevented or recycled should be reused in an environmentally safe manner whenever feasible; pollution that cannot be prevented or recycled should be treated in an environmentally safe manner whenever feasible; and disposal or release into the environment should be employed only as a last resort..." (Sec. 6602; 42 U.S.C. 13103).

According to the Pollution Prevention Act, source reduction reduces the generation and release of hazardous substances, pollutants, wastes, contaminants, or residuals at the source, usually within a process. The term source reduction "includes equipment or technology modifications, process or procedure modifications, reformulation or redesign of products, substitution of raw materials, and improvements in housekeeping, maintenance, training, or inventory control. The term source reduction does not include any practice which alters the physical, chemical, or biological characteristics or the volume of a hazardous substance, pollutant, or contaminant through a process or activity which itself is not integral to or necessary for the production of a product or the providing of a service." In effect, source reduction means reducing the amount of a pollutant that enters a waste stream or that is otherwise released into the environment prior to out-of-process recycling, treatment, or disposal. The Pollution Prevention Act directs the Agency to, among other things, "review regulations of the Agency prior and subsequent to their proposal to determine their effect on source reduction" (Sec. 6604; 42 U.S.C. 13103).

2.2.4 Regulatory Flexibility Act (RFA) as Amended by the Small Business Regulatory Enforcement Fairness Act of 1996 (SBREFA)

Under the Regulatory Flexibility Act (RFA) [5 U.S. C. 601 et seq., as amended by the Small Business Regulatory Enforcement Fairness Act (SBREFA)], EPA generally is required to conduct a regulatory flexibility analysis describing the impact of a proposed rule on small entities as part of the rulemaking. EPA conducted an initial regulatory flexibility analysis (IRFA) that examines the impact of the proposed rule on small entities, along with regulatory alternatives

that could reduce that impact. The IRFA is available for review in the MP&M Administrative Record (as chapter 10 in the Economic, Environmental and Benefits Analysis). Under section 605(b) of the RFA, if EPA certifies that a rule will not have a significant economic impact on a substantial number of small entities, EPA is not required to prepare a regulatory flexibility analysis. A regulatory flexibility analysis addresses:

- The need for, objectives of, and legal basis for a rule.
- A description of, and where feasible, an estimate of the number of small entities to which a rule would apply.
- The projected reporting, recordkeeping, and other compliance requirements of a rule, including an estimate of the classes of small entities that would be subject to a rule and the types of professional skills necessary for preparation of the report or record.
- An identification, where practicable, of all relevant federal rules that may duplicate, overlap, or conflict with a rule.
- A description of any significant regulatory alternatives to a rule that accomplish the stated objectives of applicable statutes and that minimize any significant economic impact of a rule on small entities. Consistent with the stated objectives of the CWA, the analysis discusses significant alternatives such as:
  - Establishing differing compliance or reporting requirements or timetables that take into account the resources available to small entities.
  - Clarifying, consolidating, or simplifying of compliance and reporting requirements under the rule for such small entities.
  - Using performance rather than design standards.
  - Excluding from coverage of a rule, or any part thereof, such small entities. Based on the regulatory flexibility analysis and other factors, EPA considered an exclusion to eliminate disproportionate impacts on small businesses, which reduced the number of small businesses that would be affected by a rule.

Pursuant to the RFA as amended by SBREFA, EPA also conducted outreach to small entities and convened a Small Business Advocacy Review Panel to obtain advice and recommendations of representatives of the small entities that potentially would be subject to the rule's requirements. The Panel comprised representatives from three federal agencies: EPA, the Small Business Administration, and the Office of Management and Budget. The Panel reviewed materials EPA prepared in connection with the IRFA, and collected the advice and

recommendations of small entity representatives. For this proposed rule, the small entity representatives included nine small MP&M facility owner/operators, one small municipality, and the following six trade associations representing different sectors of the industry: National Association of Metal Finishers (NAMF)/Association of Electroplaters and Surface Finishers (AESF)/MP&M Coalition; the Association Connecting Electronics Industries (also known as IPC); Porcelain Enamel Institute; American Association of Shortline Railroads (ASLRA); Electronics Industry Association (EIA); and the American Wire Producers Association (AWPA). The Panel provided background information and analysis to the small entity representatives and conducted meetings with the representatives. The Panel asked the small entity representatives to submit written comment on the MP&M rulemaking in relation to the elements of the IRFA. The Panel carefully considered these comments when developing their recommendations. The Panel prepared a report (available in the MP&M Administrative Record) that summarizes their outreach to small entities and the comments submitted by the small entity representatives. The Panel's report also presented their findings on issues related to the elements of an IRFA and recommendations regarding the rulemaking.

2.2.5 Regulatory History of the Metals Industry

EPA has promulgated effluent limitations guidelines and standards for 13 metals industries. These regulations cover metal manufacturing, metal forming, and component finishing, as summarized below.

Table 2-2

Summary of Metals Industry Effluent Guidelines

Coverage Area	Title	CFR Reference
Metal and Metal Alloy Manufacturing	Iron and Steel Manufacturing[a] Nonferrous Metals Manufacturing Ferroalloy Manufacturing	40 CFR 420 40 CFR 421 40 CFR 424
Metal Forming	Iron and Steel Manufacturing[a] Metal Molding and Casting Aluminum Forming Copper Forming Nonferrous Metals Forming and Metal Powders	40 CFR 420 40 CFR 464 40 CFR 467 40 CFR 468 40 CFR 471
Component Finishing	Electroplating Iron and Steel Manufacturing[a] Metal Finishing Battery Manufacturing Coil Coating Porcelain Enameling Electrical and Electronic Component Manufacturing	40 CFR 413 40 CFR 420 40 CFR 433 40 CFR 461 40 CFR 465 40 CFR 466 40 CFR 469

Source: Code of Federal Regulations, Part 40.
[a]The Iron and Steel Manufacturing category includes metal manufacturing, metal forming, and component finishing.

In 1986, the Agency reviewed coverage of these 13 regulations and identified a significant number of metals processing facilities discharging wastewater that these regulations did not cover. Based on this review, EPA performed a detailed analysis of these unregulated sites and identified the discharge of significant amounts of pollutants. This analysis resulted in the formation of the Machinery Manufacturing and Rebuilding (MM&R) Point Source Category. In 1989, the Agency published a Preliminary Data Summary (PDS) for the MM&R industry, which is located in the MP&M Public Record. Based on information contained in the PDS, EPA divided the MM&R category into two phases by major industrial groups or sectors. The Agency announced its schedule for the development of effluent guidelines for two separate MM&R phases in EPA's January 2, 1990 Effluent Guidelines Plan (55 FR 80). One of the primary reasons for dividing the category into two phases was the large number of facilities (over 900,000) identified in the PDS as potentially included in the MM&R Point Source Category. On May 7, 1992, EPA changed the category name to Metal Products and Machinery (MP&M) to clarify the coverage of the category (57 FR 19748). Many questionnaire respondents found the MM&R label confusing and interpreted the category to apply only to machinery sites. The Agency believes that the MP&M title more accurately describes the coverage of the category.

The MP&M Point Source Category includes sites that generate wastewater while processing metal parts, metal products, and machinery. The category covers process wastewater generated during manufacturing, assembly, rebuilding, repair, or maintenance of metal parts, products or machines for use in the following industrial sectors:

- Aerospace;
- Aircraft;
- Bus and Truck;
- Electronic Equipment;
- Hardware;
- Household Equipment;
- Instruments;
- Job Shops;
- Mobile Industrial Equipment;
- Motor Vehicles;
- Office Machines;
- Ordnance;
- Precious Metals and Jewelry;
- Printed Wiring Boards;
- Railroad;
- Ships and Boats;
- Stationary Industrial Equipment; and
- Miscellaneous Metal Products.

EPA proposed effluent limitations guidelines, pretreatment standards, and new source performance standards for the seven MP&M Phase I industrial sectors on May 30, 1995 (60 FR 28210). These seven industrial sectors included aerospace, aircraft, electronic equipment, hardware, mobile industrial equipment, ordnance, and stationary industrial equipment. EPA

received over 4,000 pages of public comment on the Phase I proposal. One area where commenters from all stakeholder groups (i.e, industry, environmental groups, regulators) were in agreement was that EPA should not divide the industry into two separate regulations. Commenters raised concerns regarding the regulation of similar facilities with different compliance schedules and potentially different limitations solely based on whether they were in a Phase I or Phase II MP&M industrial sector. Furthermore, many facilities performed work in multiple sectors. In such cases, permit writers and control authorities (e.g., POTWs) would need to decide which MP&M rule (Phase I or II) applied to a facility.

Based on these comments, EPA proposed merging the two phases into one rule (61 FR 35042; July 3, 1996). In 1997, EPA obtained approval from the U.S. District Court for the District of Columbia to combine MP&M Phases I and II into a single regulation for the 18 MP&M industrial sectors and to extend the effluent guidelines schedule (62 FR 8726; February 26, 1997). Extension of the schedule allowed EPA to use POTW survey data to develop more precise estimates of administrative burden and allowed more extensive stakeholder involvement for data collection. Under the 304(m) decree as amended, the final action on the MP&M rule is to be taken by December 2002.

3.0 DATA COLLECTION ACTIVITIES

This section summarizes the Agency's data collection activities for the MP&M rulemaking effort. Section 3.1 summarizes the 1989 and 1996 MP&M industry questionnaires including their purpose, recipient selection process, types of information collected, and uses of data, Sections 3.2 and 3.3 summarize the site visit and field sampling programs, respectively, conducted at MP&M sites. Sections 3.4, 3.5, and 3.6 discuss other data sources.

3.1 Industry Questionnaires

EPA distributed two screener and six detailed questionnaires (surveys) as part of the data collection effort for the MP&M Point Source Category. As discussed in Section 2.0, EPA initially divided the MP&M Point Source Category into two phases by major industrial sectors. The surveys distributed for the seven Phase I industrial sectors requested data reflecting 1989 operations, and the surveys distributed for the 11 Phase II industrial sectors requested data reflecting 1996 operations. The table below lists the industry surveys and the distribution dates. Sections 3.1.1 and 3.1.2 discuss these questionnaire efforts.

Distribution of the MP&M Industry Surveys

Type of Survey	Survey Name	Distribution Date
Screener	1989 Screener Survey	8/90
	1996 Screener Survey	12/96
	1996 Benefits Screener	10/98
Detailed	1989 Detailed Survey	1/91
	1996 Long Survey	6/97
	1996 Short Survey	9/97
	1996 Municipality Survey	6/97
	1996 POTW Survey	11/97
	1996 Federal Survey	4/98

3.1.1 The 1989 Industry Surveys

EPA distributed a screener and a detailed survey for the initial MP&M proposed regulation to manufacturing, rebuilding, and/or maintenance facilities engaged in the following seven industrial sectors:

- Aerospace;
- Aircraft;
- Electronic Equipment;
- Hardware;
- Mobile Industrial Equipment;

- Ordnance; and
- Stationary Industrial Equipment.

The survey instructions and appendices provide descriptions of the industrial sectors. The 1989 screener and detailed surveys are discussed below. EPA fully describes the recipient selection, stratification schemes, and the type and potential use of the information requested in the Information Collection Request (ICR) for the 1989 screener and detailed metal products and machinery industry surveys. The ICR can be found in the MP&M Administrative Record.

3.1.1.1 1989 Screener Survey

In August and September 1990, EPA mailed 8,342 screener surveys [also referred to as the Mini Data Collection Portfolio (MDCP)] to sites believed to be engaged in MP&M manufacturing, rebuilding, or maintenance activities in one of the seven industrial sectors listed above. Mailout of the screener was the preliminary step in an extensive data-gathering effort for these seven MP&M sectors. The purpose of the screener was to identify sites to receive the more detailed survey and to make a preliminary assessment of these seven MP&M sectors.

1989 Screener Recipient Selection and Distribution

The Agency sent the screener to randomly selected MP&M sites engaged in manufacturing, rebuilding, or maintenance operations in the seven industrial sectors. EPA identified potential recipients using Standard Industrial Classification (SIC) codes. To examine trends and similarities in manufacturing across the MP&M industrial sectors, EPA also sent screener surveys to some facilities performing manufacturing in the following eight industrial sectors:

- Bus and Truck;
- Household Equipment;
- Instruments;
- Motor Vehicles;
- Office Machines;
- Precious and Nonprecious Metals;
- Railroad; and
- Ships and Boats.

The Agency did not send the screener to sites whose SIC codes indicated that they were engaged in only MP&M rebuilding or maintenance (not manufacturing) operations in the eight industrial sectors.

The Agency identified more than 190 SIC codes applicable to the seven MP&M sectors listed in Section 3.1.1. Within each sector, EPA identified between one and 40 SIC codes. EPA calculated the number of sites to receive the screener within each SIC code by a coefficient of variation (CV) minimization procedure, described in the Statistical Summary for the Metal

Products & Machinery Industry Surveys. Based on the number of sites selected within each SIC code, the Agency purchased a list of randomly selected names and addresses from the Dun & Bradstreet database for each SIC code. This list included twice the number of sites specified by the CV minimization procedure for each SIC code.

EPA deleted sites from the Dun & Bradstreet list for the following reasons: sites had SIC codes that were inconsistent with company names; sites were corporate headquarters without manufacturing, rebuilding, or maintenance operations; or sites had insufficient mailing addresses. EPA then randomly selected 30 to 60 sites within each SIC code and assigned each site a randomly selected identification number. EPA assigned each site identification number a corresponding barcode to track the distribution and processing of the screeners.

EPA established a toll-free helpline from August through October of 1990 to assist screener recipients in completing the survey. This helpline received approximately 900 calls from screener recipients. Additional information about the screener mailing (e.g., a copy of the screener, specific mailing and processing procedures, non-CBI screener responses, follow-up letters, and notes from helpline telephone conversations) is discussed in the following sections and is contained in the MP&M Public Record.

1989 Screener Mailout Results

EPA initially mailed 8,000 screener surveys in August 1990. Based on the number of surveys returned undelivered, EPA mailed an additional 342 in September 1990. In addition, EPA received 22 unsolicited responses to the survey. Of the 8,364 potential respondents to the screener, including those who provided unsolicited responses, 7,846 received the screener. Screeners for the remaining 518 were returned to EPA as undeliverable. EPA assumed these sites to be out of business. Of the total potential respondents, 84 percent (6,981) returned the screener to EPA. A blank copy of the screener form and nonconfidential portions of the completed screeners are contained in the MP&M Public Record. Table 3-1 and Figure 3-1 summarize the mailout results for the 1989 and 1996 survey efforts.

Information Collected

The Agency requested the following site-specific information in the 1989 screener:

- Name and address of facility;
- Contact person;
- Parent company;
- Sectors in which the site manufactures, rebuilds, or maintains machines or metal components;

Table 3-1

1989 and 1996 MP&M Survey Mailout Results

Survey Type	Mailed	Returned Undelivered	Returned (%)	Not Returned (%)	Respondents Engaged in MP&M Operations (%)	Respondents Not Engaged in MP&M Operations (%)
1989 Screener Survey	8,342	518	6,981[a] (84)	865 (11)	3,598 (52)	3,373 (48)
1989 Detailed Survey	1,020	0	998[b] (98)	22 (X)	792 (79)	199 (20)
1996 Screener Survey	5,325	579	4248 (80)	497 (10)	2,424 (57)	1,824 (12)
1996 Benefits Screener	1750	155	1392 (80)	161 (10)	1354 (97)	38(3)
1996 Long Detailed Survey	353	1	311 (88)	41 (12)	297[c] (95)	8 (3)
1996 Short Detailed Survey	101	1	83 (82)	17 (17)	75 (90)	8 (10)
1996 Municipality Detailed Survey	150	3	135 (90)	12 (8)	71 (53)	64 (47)
1996 POTW Detailed Survey	150	2	147 (98)	1 (1)	144 (98)	3 (2)
1996 Federal Detailed Survey	--	--	51 (--)	--	44 (86)	7 (14)

[a]Includes 22 unsolicited responses.
[b]Seven of the 1989 detailed surveys were returned too late to be incorporated into the detailed survey database.
[c]Includes long survey respondents that discharge <1 mgy.
-- Not applicable to the survey.
Source: 1989 and 1996 Survey Tracking Systems.

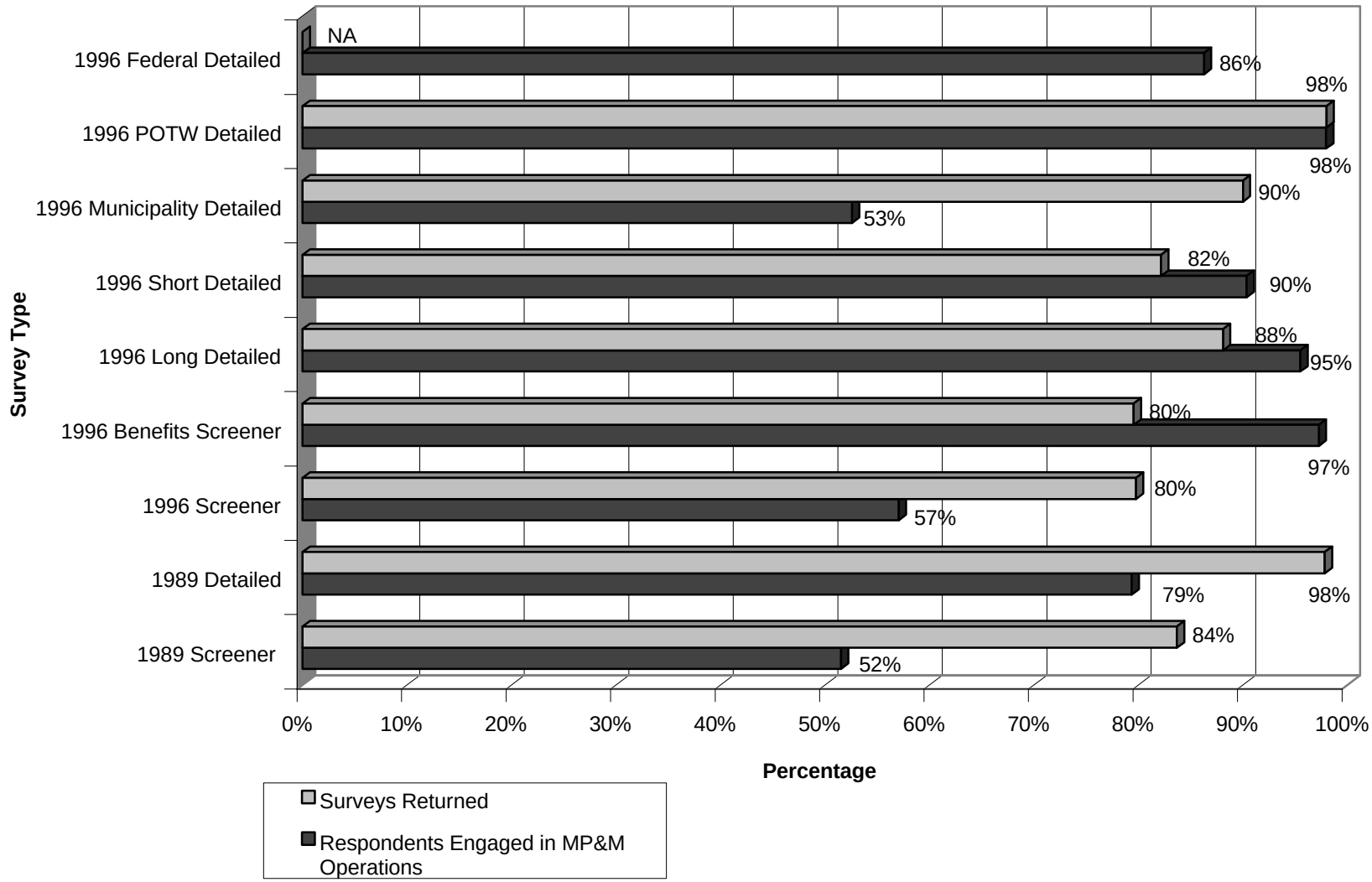

** NA - The number of federal surveys distributed is not certain, and the percentage of returned surveys cannot be calculated.*

Figure 3-1. Percentage of 1989 and 1996 MP&M Surveys Returned and Percentage of Survey Respondents Engaged in MP&M Unit Operations

- SIC codes corresponding to products at the site;
- Number of employees;
- Annual revenues;
- Unit operations performed at the site;
- Whether there is process water use and/or wastewater discharge for each unit operation performed at the site; and
- Base metal(s) on which each unit operation is performed.

The Agency used a computerized database system to store and analyze data received from the screeners. The database dictionary and all nonconfidential screener surveys are located in the MP&M Public Record.

EPA determined the number of sites engaged in MP&M operations by responses to the screener. As shown in Table 3-1, approximately 52 percent of the 1989 screener survey respondents reported that their sites were engaged in MP&M operations and approximately 48 percent reported no MP&M operations at their sites. The status of 10 of the sites could not be determined because they returned incomplete screeners and did not respond to follow-up efforts.

The Agency contacted a statistically representative sample of the nonrespondent sites (i.e., sites that did not return the screener) and sites reporting "not engaged" in MP&M operations to determine whether their responses were due to confusion over the scope of the MP&M industry. Based on the results of this follow-up, EPA adjusted the survey weights for misclassification and response. The methodology for calculating the adjustment factors is provided in Chapter 4 of the Statistical Summary for the Metal Products and Machinery Industry Surveys, Part I which is located in the MP&M Administrative Record.

1989 Screener Data Entry, Engineering Coding, and Analysis

EPA reviewed all of the screener surveys prior to data entry. As part of this effort, the Agency reviewed all documentation provided by the site, corrected errors and deficiencies, and coded the information for data entry. In some cases, these revisions required telephone contact with site personnel. The Agency contacted more than 1,100 screener recipients to resolve survey deficiencies and code information for data entry. Following preliminary review, EPA entered the scannable data (i.e., responses to multiple-choice, Mark Sense™ questions) into the database using a Scantron™ reader. EPA scanned each form twice and compared the information using a computer program as a quality control (QC) check. The Agency performed double-key entry of nonscannable data, resolved any inconsistencies, and converted the data to database files.

Based on the screener mailout results, EPA developed an MP&M industry profile for the seven sectors. The screener database report provides estimates of the national population for sites in these MP&M sectors with regard to water use characteristics, size, location, sector,

unit operations, and metal types. The Statistical Summary for the Metal Products & Machinery Industry Surveys discusses the sample size determination and statistical procedures for developing national estimates for the industry.

3.1.1.2 1989 Detailed Survey

Based on responses to the 1989 screener, EPA sent a more detailed survey to a select group of water-using MP&M sites. This survey, also referred to as the data collection portfolio (DCP), was designed to collect detailed 1989 technical and financial information. EPA used this information to characterize MP&M sites from the seven industrial sectors, develop pollutant loadings and reductions, and develop compliance cost estimates, as discussed later in this document.

EPA mailed 896 detailed surveys in January 1991. Based on the number of detailed surveys returned undelivered, EPA mailed an additional 124 detailed surveys in January and February 1991, for a total of 1,020 detailed surveys mailed. A blank copy of the 1989 detailed survey and copies of the nonconfidential portions of the completed detailed surveys are located in the MP&M Public Record.

1989 Detailed Survey Recipient Selection and Distribution

EPA selected 1,020 detailed survey recipients from the following three groups of sites:

- Water-discharging 1989 screener respondents (860 sites);
- Water-using 1989 screener respondents that did not discharge process water (74 sites); and
- Water-discharging sites from key MP&M companies that did not receive the 1989 screener (86 sites).

The methods used to select sites within each group are described below.

The Agency mailed the 1989 detailed survey to all 860 water-discharging screener respondents. EPA's intent in collecting detailed data from all 860 sites was to characterize the potential variations in unit operations performed and water use practices among water-discharging sites in these seven MP&M industrial sectors.

The Agency mailed the 1989 detailed survey to a probability sample of 50 screener respondents that reported using but not discharging process water. EPA selected these sites to provide information on water-use practices at sites that use but do not discharge process water, and to determine if "zero-discharge" practices used at those sites could be used at other MP&M sites. In addition to the 50 probability sample sites, EPA also mailed the 1989 detailed survey to an additional 24 screener respondents that reported using but not discharging process water. The

Agency selected these sites because they performed unit operations that were not expected to be sufficiently characterized by detailed surveys mailed to other sites. The unit operations that EPA expected at each of the 24 sites are listed in the MP&M Public Record.

EPA mailed the 1989 detailed survey to 86 sites that did not receive the 1989 screener. The Agency identified these sites to represent key companies in the MP&M industry that EPA did not select as 1989 detailed survey recipients based on the screener mailout. EPA identified key companies from Dun & Bradstreet company lists, the Thomas Register, Fortune Magazine's list of the top 500 U.S. companies, and MP&M site visits at companies with annual revenues of $50 million or more that EPA believed to be leading companies in their particular MP&M sector. The Agency contacted each of the key companies to identify sites within the company that were engaged in MP&M operations and used process water to perform MP&M operations. Records of these follow-up telephone calls are located in the MP&M Public Record. EPA did not use these 86 surveys for developing the national estimates because the Agency did not randomly select these facilities.

EPA operated a toll-free telephone helpline from January until July 1991 to assist recipients in completing the 1989 detailed survey. The helpline received approximately 1,400 calls from detailed survey recipients. Callers to the 1989 detailed survey helpline typically requested the following:

- Assistance with the technical sections of the detailed survey (e.g., technical clarification of unit operation definitions);
- Additional time to complete the survey;
- Assistance with the financial sections of the detailed survey (these calls were referred to a separate economics helpline); or
- Clarification of the applicability of the survey (i.e., did the survey apply to the site?).

Records for nonconfidential telephone calls to the helpline and to EPA personnel are located in the MP&M Public Record.

1989 Detailed Survey Mailout Results

Table 3-1, on page 3-4, summarizes the results of the detailed survey mailout. Of the 1,020 sites that received the detailed survey, 998 responded to the survey and 22 did not. Of the sites that responded, EPA did not include 199 sites in the detailed survey database for one of the following reasons:

- The site was out of business;
- The site did not use process water;

- The site was not engaged in MP&M operations; or

- Process information at the site was Department of Defense or Department of Energy classified information.

Specific reasons for not using data from these sites are located in the MP&M Public Record.

Upon review of the detailed surveys submitted by these sites, EPA determined 87 sites to be in the other 11 industrial sectors rather than the seven sectors identified in Section 3.1.1. Because the scope of the detailed survey mailout effort included only sites from the seven industrial sectors listed in Section 3.1.1, EPA did not include these 87 sites in the detailed survey database.

Information Collected

This section describes the information collected in each part of the 1989 detailed survey and the reasons for collecting this information. The detailed survey instructions and the Information Collection Request (ICR) for this project contain further details on the types of and potential uses for information collected. These documents are located in the MP&M Administrative Record.

The Agency designed the 1989 detailed survey to collect information necessary to develop effluent guidelines and standards for the MP&M industry. EPA divided the detailed survey into the following parts:

- Part I - General Information;
- Part II - Process Information;
- Part III - Water Supply;
- Part IV - Wastewater Treatment and Discharge;
- Part V - Process and Hazardous Wastes; and
- Part VI - Financial and Economic Information.

Part I (questions 1 through 13) requested information necessary to identify the site, to characterize the site by certain variables, and to confirm that the site was engaged in MP&M operations. This information included: site name, address, contact person, number of employees, facility age, average energy usage, discharge permit status, and MP&M activity (manufacturing, rebuilding, or maintenance).

Part II (questions 14 through 21) requested detailed information on MP&M products, production levels, unit operations, activity, water use for unit operations, wastewater discharge from unit operations, miscellaneous wastewater sources, waste minimization practices (e.g., pollution prevention), and air pollution control for unit operations. EPA requested the site to provide detailed technical information (e.g., water balance, chemical additives, metal type processed, disposition of wastewater) for each MP&M unit operation and air pollution control

device using process water. This section also requested information on unique and/or auxiliary MP&M operations. EPA used this information to evaluate raw waste characteristics, water use and discharge practices, and sources of pollutants for each MP&M unit operation.

Part III (question 22) requested information on the water supply for the site. EPA requested the site to specify the source water origin, average intake flow, average intake operating hours, and the percentage of water used for MP&M operations. EPA used this information to evaluate overall water use for the site.

Part IV (questions 23 through 33) requested detailed information on MP&M influent and effluent wastewater treatment streams and wastewater treatment operations. The information requested included: the origin of each stream contributing to the site's overall wastewater discharge; a block diagram of the wastewater treatment system; detailed technical information (e.g., wastewater stream flow rates, treatment chemical additives, system capacity, disposition of treatment sludge) for each wastewater treatment operation; self-monitoring data; and capital and operating cost data. EPA collected this information to evaluate treatment in place at MP&M sites, to develop and design a cost model and to assess the long-term variability of MP&M effluent streams.

Part V (question 34) requested detailed information on the types, amounts, and composition of wastewater and solid/hazardous wastes generated during production or waste treatment, and the costs of solid waste disposal. EPA collected this information to evaluate the types and amounts of wastes currently discharged, the amount of waste that is contract hauled off site, and the cost of contract-hauling wastes.

Part VI requested detailed financial and economic information from the site and the company owning the site. The Economic, Environmental, and Benefits Analysis document for the proposed rule, which is located in the MP&M Administrative Record, presents information from this part.

1989 Detailed Survey Review, Coding, and Data Entry

The Agency completed a detailed engineering review of the detailed surveys, including coding responses to questions from Parts I through V of the detailed surveys to facilitate entry of technical data into a database. The MP&M DCP Database Dictionary identifies all database codes developed for this effort and the database dictionary for Section VI of the detailed survey are located in the MP&M Administrative Record.

The Agency followed up with telephone calls to all respondents who: (1) did not provide information on operations (manufacturing, rebuilding, or maintenance) or sectors; (2) did not provide metal type or unit operation descriptions for each water-using unit operation; or (3) did not provide descriptions for each wastewater treatment operation. EPA also made follow-up calls to clarify incomplete or contradictory technical or economic information. EPA confirmed all information obtained from follow-up calls by sending a letter to the site.

EPA developed a database to store all technical data provided in the detailed surveys. After engineering review and coding, the Agency entered data from the detailed surveys into the database using a double key-entry and verification procedure. EPA coded and entered data from 792 detailed survey respondents determined to be engaged in MP&M activities into the detailed survey database. The MP&M DCP Database Dictionary presents the database structure and defines each field in the detailed survey database and the codes that describe data in these fields.

1989 Detailed Survey Data Analysis

The Statistical Summary for the Metal Products & Machinery Industry Surveys provides estimates of the national population of MP&M water-discharging sites with regard to size, location, sector, unit operations, metal types, discharge flows, and production-normalized flows. The report discusses the statistical procedures for developing national estimates for the industry, and is located in the MP&M Administrative Record.

3.1.2 The 1996 Industry Surveys

Between 1996 and 1998, EPA distributed one screener and five detailed surveys. The five detailed surveys included the long, short, municipality, federal, and publicly owned treatment works (POTW) surveys. The Agency distributed the 1996 surveys to commercial and government (federal, state, and local) facilities that manufacture, rebuild, or maintain metal products or parts to be used in one of the following 11 MP&M industrial sectors:

- Bus and Truck;
- Household Equipment;
- Instruments;
- Job Shops;
- Motor Vehicles;
- Office Machines;
- Precious Metals and Jewelry;
- Printed Wire Boards;
- Railroad;
- Ships and Boats; and
- Miscellaneous Metal Products.

The job shop sector includes facilities that manufacture, rebuild, or maintain metal products or parts but do not own 50 percent or more of the items they process. EPA distributed the POTW detailed survey to POTWs to assess the impact of the MP&M regulation on permitting entities. The 1996 screener and detailed surveys are discussed below. Recipient selection, stratification schemes, and the type and potential use of the information requested are described in more detail in the ICR for the 1996 screener and detailed metal products machinery industry surveys which is located in the MP&M Administrative Record.

3.1.2.1 1996 Screener Surveys

In December 1996 and February 1997, EPA distributed 5,325 screener surveys to sites believed to be engaged in MP&M manufacturing, rebuilding, or maintenance activities in one of 11 MP&M industrial sectors listed above. The purpose of the screener surveys was to identify sites to receive the more detailed survey and to make a preliminary assessment of the MP&M industry for the 11 industrial sectors listed in Section 3.1.2. EPA sent an additional 1,750 screeners to facilities located in Ohio (a state with a high concentration of MP&M facilities) as part of the benefits study. The Agency used these screeners to collect data to analyze environmental benefits.

1996 Screener Recipient Selection and Distribution

As discussed above, EPA sent the 1996 screener survey to 5,325 randomly selected MP&M sites (includes replacement sites). The Agency selected potential recipients from the Dun & Bradstreet database based on the industrial sector (using the SIC code), activity (i.e., manufacturing, maintenance, or rebuilding), size as measured by number of employees, and wastewater discharge flow rate.

The Agency identified more than 126 SIC codes applicable to the 11 MP&M sectors. Within each sector, EPA identified between 1 and 26 SIC codes. EPA calculated the number of sites to receive the 1996 screener within each SIC code by a coefficient of variation (CV) minimization procedure described in the Statistical Summary for the Metal Products & Machinery Industry Surveys. Based on the number of sites selected within each SIC code, the Agency obtained a list of randomly selected names and addresses from Dun & Bradstreet. This list included twice the number of sites specified by the CV minimization procedure for each SIC code. EPA randomly selected the initial list of sites from the Dun & Bradstreet database for each SIC code.

EPA reviewed the potential sites and deleted sites for the following reasons:

- The site was a corporate headquarters without manufacturing, rebuilding, or maintenance operations;
- The site received a 1989 screener or detailed survey;
- The site was a duplicate of a miscellaneous facility in the list of potential MP&M sites.
- The site had an SIC code which was inconsistent with company name; or
- The site had an insufficient mailing address.

EPA established a toll-free telephone helpline and an electronic mail address to assist screener recipients in completing the survey. EPA received helpline calls and electronic

mail inquiries from more than 600 screener recipients. Nonconfidential notes from helpline and review follow-up calls are located in the MP&M Public Record.

1996 Screener Mailout Results

EPA initially mailed 4,900 surveys in December 1996. The Agency distributed an additional 425 surveys to replace surveys that were returned undelivered. EPA assumed the undeliverable sites to be out of business. Of the 5,325 surveys mailed, 80 percent (4,248) of the recipients returned completed surveys to EPA. A blank copy of the 1996 screener and nonconfidential portions of the completed screeners are located in the MP&M Public Record. Table 3-1 and Figure 3-1, on pages 3-4 and 3-5, summarize the MP&M survey mailout results.

The Agency contacted a statistically representative sample of nonrespondent sites to determine whether these sites were engaged in MP&M operations and discharged process wastewater. Only 24 percent of the nonrespondents contacted were engaged in MP&M operations, and approximately half of these facilities did not discharge process wastewater.

Information Collected

The Agency requested the following site-specific information in the screener:

- Name and address of facility;
- Contact person;
- Whether process water is used at the site;
- Destination of process wastewater discharged;
- Volume of process wastewater discharged;
- Number of employees;
- Annual revenue;
- Sectors in which the site manufactures, rebuilds, or maintains machines or metal components; and
- Unit operations performed at the site and whether there is water use and/or wastewater discharge for each unit operation performed at the site.

The Agency used a computerized database system to store and analyze data received from the 1996 screeners. Nonconfidential portions of the screener surveys and the database dictionary are located in the MP&M Administrative Record.

1996 Screener Data Review and Data Entry

EPA reviewed the 1996 screener survey for accuracy and consistency and formatted the information for data entry. The Agency contacted approximately 1,800 screener respondents to resolve deficient and inconsistent information prior to data entry. Following review, EPA double key-entered and compared the data from the formatted screeners, using a computer program, as a quality control check. The Agency then reviewed the database files for deficiencies and inconsistencies, and resolved all issues for the final survey database.

1996 Benefits Screener Survey

For an environmental benefits study, EPA sent the 1996 screener survey to 1,750 (including replacement sites) randomly selected sites in Ohio, a state with a large number of MP&M sites. EPA used the data for the environmental benefit analyses. The selection criteria and sampling frame for the benefits screener recipients are described in more detail in memoranda located in the MP&M Administrative Record.

The Agency initially mailed the benefits screener to 1,600 facilities in October 1998. EPA mailed an additional 150 facilities the screener in February 1999 to replace surveys that were returned undelivered. The Agency assumed the undeliverable surveys to be out of business. Of the 1,750 surveys mailed, 80 percent (1,392) of the recipients returned completed screeners to EPA. A blank copy of the 1996 benefits screener and nonconfidential portions of the completed benefits screeners are located in the MP&M Public Record. Table 3-1 and Figure 3-1, on pages 3-4 and 3-5, summarize MP&M mailout results.

EPA established a toll-free telephone helpline and an electronic mail address to assist screener recipients in completing the survey. EPA received helpline calls and electronic mail inquiries from more than 900 benefits screener recipients. Nonconfidential notes from helpline and review follow-up calls are located in the MP&M Public Record.

The Agency followed the same review, data entry, and database development procedures used for the original 1996 screener survey. The benefits screener database is discussed in the Economic, Environmental, and Benefits Analysis of the Proposed Metal Products & Machinery Rule. EPA contacted more than 400 screener respondents to resolve deficient and inconsistent information prior to data entry.

3.1.2.2 1996 Long Detailed Survey

EPA distributed the long detailed surveys in June 1997 to 353 MP&M wastewater-discharging industrial facilities. EPA designed this survey to gather detailed technical and economic information required to develop the MP&M effluent limitations guidelines and standards. The long survey is discussed below.

1996 Long Survey Recipient Selection and Distribution

In June 1997, EPA sent the long survey to all 353 1996 screener respondents who indicated they performed operations in one of the 11 MP&M industrial sectors listed in Section 3.1.2 and discharged one million or more gallons of MP&M process wastewater annually. EPA established a toll-free telephone helpline and an electronic mail address to assist long survey recipients in completing the survey. EPA received helpline calls and electronic mail inquiries from approximately 200 long survey recipients. Nonconfidential notes from helpline and review follow-up calls are located in the MP&M Public Record.

1996 Long Survey Mailout Results

Of the 353 surveys mailed, 88 percent (311) of the recipients returned completed surveys to EPA. One survey was returned as undelivered and EPA assumed the facility to be out of business. A blank copy of the 1996 long survey and nonconfidential portions of the completed long surveys are located in the MP&M Public Record. Table 3-1 and Figure 3-1, on pages 3-4 and 3-5, summarize the MP&M survey mailout results.

Information Collected

This section describes the information collected in each section of the 1996 long survey and the reason EPA collected the information. Further details on the types of information collected and the potential uses of the information are contained in the ICR for this project and in the survey instructions which are located in the MP&M Administrative Record.

EPA divided the long detailed survey into the following sections:

- Section I: General Site Information;
- Section II: General Process Information;
- Section III: Specific Process Information;
- Section IV: Economic Information; and
- Section V: Voluntary Supplemental Information.

Table 3-2 summarizes the information requested in the 1996 long, short, federal, and municipality detailed surveys by question number. EPA designed the long, short, municipality, and federal surveys to collect similar detailed process information from different audiences, as discussed below for each survey.

Table 3-2

Summary of 1996 Detailed Survey Information by Question Number

Survey Question Number			Type of Information Requested
Long and Federal	**Short**	**Municipality**	
Section I 1	**Section I** 1	**Part II** 1	Industrial sector activities
Section II 2-5	**Section II** 2-5	2-5	Site location and facility contact
6,7	6, 7	5, 6	Number of employees and age of site
8,9	8, 9	7, 8	Discharge status and destination
10	10	9	Permits under Miscellaneous categorical effluent guidelines
---	11-12	10-11	Types of end-of-pipe wastewater treatment units
11	13	12	Metal types processed
12	15	13	5 major products (quantity and sector)
13	16	14	Unit operations: water use and associated rinses
Section III 14-15	---	---	General water use and costs
16	---	---	Production process diagram
17-23	---	---	Detailed description of **wet** unit operations performed
24-29	**Section II** 17	16	In-process pollution prevention technologies or practices
30	---	---	Wastewater treatment (WWT) diagram
31-41	---	---	Detailed design and operating parameters of WWT units
42	---	---	WWT costs by treatment unit
43-44	**Section II** 14	15	Wastewater sampling and analysis conducted
45	---	---	Contract haul and disposal costs
---	---	---	Facility comments page
Section IV 1-9	**Section IV** 1-8	**Part I** 1-3	Financial and economic data
Section V 1	**Section V** 1	---	Parent firm name and contact, number of Miscellaneous MP&M facilities
2	2	---	Number of employees for Miscellaneous facility(ies)
3	3	---	MP&M sector and activity
2, 4	2, 4	---	Discharge status and destination
5	5	---	Unit operations: water use and discharge status

--- Question is not applicable to this survey.

Section I requested information to determine if the facility was engaged in MP&M operations. Question 1 requested the site to identify the MP&M industrial sector and type of activity (manufacturing, rebuilding, or maintenance) performed.

Section II requested information to identify the site location and contact person, number of employees, facility age, process wastewater discharge status and destination, and wastewater discharge permits and permitting authority. This section also requested general information about metal types processed, MP&M products and production levels, water use for unit operations, and wastewater discharge from unit operations. EPA used the process information to evaluate water use and discharge practices, and sources of pollutants for each MP&M unit operation.

Section III requested detailed information on MP&M wet unit operations, pollution prevention practices, wastewater treatment technologies, costs for water use and wastewater treatment systems, and wastewater/sludge disposal costs. EPA also requested the site to provide block diagrams of the production process and the wastewater treatment system. The unit operation information requested included: metal types processed, production rate, operating schedule, chemical additives, volume and destination of process wastewater and rinse waters, in-process pollution prevention technologies, and in-process flow control technologies. The information requested for each wastewater treatment unit included: operating flow rate, design capacity, operating time, chemical additives, and unit operations discharging to each treatment unit. In addition, EPA requested the site to provide the type of MP&M wastewater sampling data collected. EPA used these data to characterize the industry, to perform subcategorization analyses, to identify best management practices, to evaluate performance of the treatment technology for inclusion in the regulatory options, and to develop regulatory compliance cost estimates.

Section IV requested detailed financial and economic information about the site or the company owning the site. Information from this section is presented in the Economic, Environmental, and Benefits Analysis of the Proposed Metal Products & Machinery Rule, which is located in the MP&M Administrative Record.

Section V requested supplemental information on Miscellaneous MP&M facilities owned by the company. EPA included this voluntary section to measure the combined impact of proposed MP&M effluent guidelines on companies with multiple MP&M facilities that discharge process wastewater. This section requested the same information collected in the 1996 MP&M screener survey. Responses to questions in this section provided the size, industrial sector, revenue, unit operations, and water usage of the company's Miscellaneous MP&M facilities.

1996 Long Survey Data Review and Data Entry

EPA completed a detailed engineering review of Sections I through III of the detailed survey to evaluate the accuracy of technical information provided by the respondents. During the engineering review, EPA coded responses to facilitate entry of technical data into the long survey database. The MP&M 1996 Long Survey Database Dictionary identifies the database codes developed for this project, and is located in the MP&M Administrative Record. EPA

contacted approximately 240 long survey respondents, by telephone and letter, to clarify incomplete or inconsistent technical information prior to data entry.

The Agency developed a database for the technical information provided by survey respondents. After engineering review and coding, EPA entered data from 297 long surveys into the database using a double key-entry and verification procedure. The MP&M 1996 Long Survey Database Dictionary presents the database structure and defines each field in the files for the long survey database. EPA did not include data from 14 long survey respondents in the database for the following reasons:

- The site was out of business;
- The site did not use process water;
- The site was not engaged in MP&M operations; or
- The site provided insufficient data and the survey was returned too late to enter into the database.

3.1.2.3 1996 Short Detailed Survey

EPA distributed the short surveys in September 1997 to 101 MP&M wastewater-discharging industrial facilities. EPA designed this survey to gather technical and economic information required to develop the MP&M effluent limitations guidelines and standards. The short survey is discussed below.

1996 Short Survey Recipient Selection and Distribution

EPA initially sent 100 short surveys in September 1997 and mailed one additional survey to a site to replace a short survey that was returned undelivered; EPA assumed the undeliverable site to be out of business. The Agency sent the short surveys to randomly selected 1996 screener respondents who performed operations in one of the 11 MP&M industrial sectors identified in Section 3.1.2 and indicated they discharged less than one million gallons of MP&M process wastewater annually. The selection criteria and sampling frame for short survey recipients are described in more detail in the Statistical Summary for the Metal Products & Machinery Industry Surveys.

EPA established a toll-free telephone helpline and an electronic mail address to assist short survey recipients in completing the survey. EPA received helpline calls and electronic mail inquiries from approximately 20 short survey recipients. Nonconfidential notes from helpline and review follow-up calls are located in the MP&M Public Record.

1996 Short Survey Mailout Results

Of the 101 surveys mailed, 82 percent (83 surveys) of the recipients returned completed surveys to EPA. A blank copy of the 1996 short survey and nonconfidential portions of the completed short surveys are located in the MP&M Public Record. Table 3-1 and Figure 3-1, on pages 3-4 and 3-5, summarize the MP&M survey mailout results.

Information Collected

The information collected in the 1996 short survey included the identical general site and process information and economic information collected in Sections I, II, IV, and V of the long detailed survey (see Section 3.1.2.2). To minimize the burden on facilities discharging less than one million gallons of process wastewater, EPA did not require these facilities to provide the detailed information on MP&M unit operations or treatment technologies that EPA requested in Section III of the long survey. The ICR for this project and the survey instructions have further details on the types of information collected and the potential uses of the information.

EPA divided the short survey into the following sections:

- Section I: General Site Information;
- Section II: General Process Information;
- Section IV: Economic Information; and
- Section V: Voluntary Supplemental Information.

Table 3-2, on page 3-16, summarizes the 1996 short survey information by question number.

1996 Short Survey Data Review and Data Entry

EPA completed a detailed engineering review of Sections I and II of the short survey to evaluate the accuracy of technical information provided by the respondents. During the engineering review, EPA coded responses to facilitate entry of technical data into the short survey database. The MP&M 1996 Short Survey Database Dictionary identifies the database codes developed for this project and is located in the MP&M Administrative Record. EPA contacted more than 60 short survey respondents, by telephone and letter, to clarify incomplete or inconsistent technical information prior to data entry.

The Agency developed a database for the technical information provided by survey respondents. After engineering review and coding, EPA entered data for 75 short surveys into the database using a double key-entry and verification procedure. The MP&M 1996 Short Survey Database Dictionary presents the database structure and defines each field in the files for the short survey database. EPA did not include data from eight short survey respondents in the database for the following reasons:

- The site was out of business;
- The site did not use process water; or

- The site was not engaged in MP&M operations.

3.1.2.4 1996 Municipality Detailed Survey

EPA distributed the municipality surveys in June 1997 to 150 city and county facilities that might operate MP&M facilities. EPA designed this survey to measure the impact of this rule on municipalities and Miscellaneous government entities that perform maintenance and rebuilding operations on MP&M products (i.e., bus and truck, automobiles, etc.).

Recipient Selection and Distribution

The Agency sent the municipality survey to 150 city and county facilities randomly selected from the Municipality Year Book-1995 based on population and geographic location. EPA allocated sixty percent of the sample to municipalities and 40 percent to counties. The 60/40 distribution was approximately proportional to their aggregate populations in the frame. The Agency divided the municipality sample and the county sample into three size groupings as measured by population. For municipalities, the population groupings were: less than 10,000 residents, 10,000 - 50,000 residents, and 50,000 or more residents. For counties, the population groupings were: less than 50,000 residents, 50,000-150,000 residents, and 150,000 or more residents. The geographic stratification conformed to the Census definitions of Northeast, North Central, South, Pacific, and Mountain states.

EPA established a toll-free telephone helpline and an electronic mail address to assist municipality survey recipients in completing the survey. EPA received helpline calls and electronic mail inquiries from more than 50 municipality survey recipients. Notes from helpline and review follow-up calls are located in the MP&M Administrative Record.

1996 Municipality Survey Mailout Results

EPA distributed 150 municipality surveys in June 1997. Three surveys were returned undelivered. Of the 150 surveys mailed, 90 percent (135) of the recipients returned completed surveys to EPA. A blank copy of the 1996 municipality survey and nonconfidential portions of the completed municipality surveys are located in the MP&M Public Record. Table 3-1 and Figure 3-1, on pages 3-4 and 3-5, summarize the MP&M survey mailout results.

Information Collected

The 1996 municipality survey collected economic information for the entire municipality and site-specific process information for each MP&M site operated by the municipality. The ICR for this project and the survey instructions contain further details on the types of information collected and the potential uses of the information and are located in the MP&M Administrative Record.

EPA divided the municipality detailed survey into the following parts:

- Part I: Economic and Financial Information; and
- Part II: General Site-Specific Process Information.

Table 3-2, on page 3-16, summarizes the 1996 municipality survey information by question number.

Part I requested information to provide the site location and contact person, number of employees, detailed financial and economic information about the entire municipality, and information necessary to determine if the municipality owned and operated MP&M sites in any of the MP&M industrial sectors. Information from this section is presented in the Economic, Environmental, and Benefits Analysis of the Proposed Metal Products & Machinery Rule, which is located in the MP&M Administrative Record.

Part II requested site-specific process information for each MP&M site owned and operated by the municipality. Question 1 requested the site to identify the MP&M industrial sector and type of activity (manufacturing, rebuilding, or maintenance) performed. The remaining questions were identical to Section II of the short detailed survey and requested facility age, process wastewater discharge status and destination, wastewater discharge permits and permitting authority, general information about metal types processed, MP&M products and production levels, water use for unit operations, and wastewater discharge from unit operations. The Agency used the process information to evaluate water use and discharge practices, and sources of pollutants for each MP&M unit operation.

1996 Municipality Survey Data Review and Data Entry

EPA completed a detailed engineering review of Part II of the municipality survey to evaluate the accuracy of technical information provided by the respondents. During the engineering review, the Agency coded responses to facilitate entry of technical data into the municipality survey database. The MP&M 1996 Municipality Survey Database Dictionary identifies the database codes developed for this project, and is located in the MP&M Administrative Record. EPA contacted more than 50 municipality survey respondents by telephone to clarify incomplete or inconsistent technical information prior to data entry.

The Agency developed a database for the technical information provided by survey respondents. After engineering review and coding, EPA entered data from 209 municipality facilities into the database using a double key-entry and verification procedure. This number is greater than the number of respondents because some municipalities had more than one site engaged in MP&M operations. The MP&M 1996 Municipality Survey Database Dictionary presents the database structure and defines each field in the files for the municipality survey database.

3.1.2.5 1996 Federal Facilities Detailed Survey

In April 1998, EPA distributed the federal facilities detailed survey to the following seven federal agencies:

- Department of Energy;
- Department of Defense;
- National Aeronautics and Space Administration (NASA);
- Department of Transportation (including the United States Coast Guard);
- Department of Interior;
- Department of Agriculture; and
- United States Postal Service.

EPA designed this survey to assess the impact of the MP&M effluent limitations guidelines and standards on federal agencies that operate MP&M facilities.

Recipient Selection and Distribution

There was no specific sampling frame for the federal survey. EPA distributed the survey to federal agencies likely to perform industrial operations on metal products or machines. EPA requested representatives of seven federal agencies to voluntarily distribute copies of the survey to sites they believed performed MP&M operations. The selection criteria for federal survey recipients are described in more detail in the ICR for the 1996 MP&M industry surveys. Because the sample was not randomly selected, EPA did not use data from these surveys to develop national estimates.

EPA established a toll-free telephone helpline and an electronic mail address to assist federal survey recipients in completing the survey. EPA received helpline calls and electronic mail inquiries from approximately 20 federal survey recipients. Nonconfidential notes from helpline and review follow-up calls are located in the MP&M Public Record.

1996 Federal Survey Distribution Results

EPA distributed the federal surveys to seven federal agencies and requested that they forward copies to any of their sites that performed MP&M operations. The Agency received 51 completed federal surveys. Of the 51 returned surveys, 39 were Department of Defense facilities and 12 were NASA facilities. A blank copy of the 1996 federal survey and nonconfidential portions of the completed federal surveys are located in the MP&M Public Record.

Information Collected

The information collected in the 1996 federal survey was identical to the long survey. The federal survey included the same five sections and questions discussed in Section 3.1.2.2. The ICR for this project and the survey instructions contain further details on the types of

information collected and the potential uses of the information . Table 3-2, on page 3-22, summarizes the 1996 federal detailed survey information by question number.

Data Review and Data Entry

EPA completed a detailed engineering review of Sections I through III of the federal detailed survey to evaluate the accuracy of technical information provided by the respondents. During the engineering review, the Agency coded responses to facilitate entry of technical data into the federal survey database. The MP&M 1996 Federal Survey Database Dictionary identifies the database codes developed for this project and is located in the MP&M Administrative Record.

The Agency developed a database for the technical information provided by survey respondents. After engineering review and coding, EPA entered data from 44 federal surveys into the database using a double key-entry and verification procedure. The Agency did not include data from seven federal survey responses in the database because the sites did not use MP&M process water. The MP&M 1996 Federal Survey Database Dictionary presents the database structure and defines each field in the files for the federal survey database.

3.1.2.6 1997 Iron and Steel Industry Short Survey Data

As part of its effort to review and revise effluent limitations guidelines and standards for the iron and steel industry, EPA distributed the iron and steel industry short survey to 402 iron and steel facilities in November 1998. Following field sampling of iron and steel sites and review of the completed industry surveys, EPA decided that some iron and steel operations would be covered more appropriately by the MP&M rule because they were more like MP&M operations. These operations are steel forming and surface treatment processes and include the following:

- Acid Cleaning/Pickling;
- Alkaline Cleaning;
- Annealing;
- Conversion Coating (e.g., passivation, surface activation/fluxing)
- Electrolytic Cleaning
- Electroplating
- Cold Forming (e.g., wire, bar, and rod drawing, pipe and tube forming)
- Hot Dip Coating;
- Lube (lime, Borax, etc.)
- Painting
- Salt Bath Descaling
- Shot Blasting; and
- Wet Air Pollution Control.

The wastewater characteristics and flows for these operations are similar to those seen in the MP&M industry, and less like the wastewater characteristics and flows associated with

the large, continuous flat-rolled products (e.g., sheet, strip, and plate) and the hot-forming operations at steel manufacturing facilities.

Based on EPA's decision regarding these operations, the Agency transferred 154 iron and steel surveys to the MP&M project. Of the 154 surveys transferred, 47 sites discharge process wastewater, 64 do not discharge process wastewater, and 43 sites discharge storm water only. The Agency coded and entered process and wastewater treatment information from 47 iron and steel surveys into the MP&M costing input database. The sites included in the costing effort were sites discharging process wastewater. The 107 iron and steel zero discharge and stormwater-only sites were not included in the costing effort. A blank copy of the 1997 iron and steel short survey and nonconfidential portions of the 47 completed iron and steel surveys are located in the MP&M Public Record.

3.1.2.7 1996 Publicly Owned Treatment Works (POTW) Detailed Survey

EPA distributed the POTW survey to 150 sites in November 1997. The Agency designed this survey to estimate benefits associated with implementation of the MP&M regulations and to estimate possible costs and burden that POTWs might incur in writing and maintaining MP&M permits or other control mechanisms.

Recipient Selection and Distribution

The Agency sent the POTW survey to 150 POTWs with flow rates greater than 0.50 million gallons per day. EPA randomly selected the recipients from the 1992 Needs Survey Review, Update, and Query System Database. EPA divided the POTW sample into two strata by daily flow rates: 0.50 to 2.50 million gallons, and 2.50 million gallons or more. The selection criteria and sampling frame for POTW survey recipients are described in more detail in the ICR for the 1996 surveys.

EPA established a toll-free telephone helpline and an electronic mail address to assist POTW survey recipients in completing the survey. EPA received helpline calls and electronic mail inquiries from approximately 50 POTW survey respondents. Nonconfidential notes from helpline and review follow-up calls are located in the MP&M Administrative Record.

1996 POTW Survey Mailout Results

EPA distributed 150 POTW surveys in November 1997. Two surveys were returned undelivered. Of the 150 surveys mailed, 98 percent (147) of the recipients returned completed surveys to EPA. A blank copy of the 1996 POTW survey and nonconfidential portions of the completed POTW surveys are located in the MP&M Public Record. Table 3-1 and Figure 3-1, on pages 3-4 and 3-5, summarize the MP&M survey mailout results.

Information Collected

The POTW survey requested data required to estimate benefits associated with implementation of the MP&M regulations and to estimate possible costs and burden that POTWs might incur in writing and maintaining MP&M permits or other control mechanisms. The ICR for this project and the survey instructions contain further details on the types of information collected and the potential uses of the information. EPA divided the POTW survey into the following parts:

- Part I: Introduction and Basic Information;
- Part II: Administrative Permitting Costs; and
- Part III: Sewage Sludge Use or Disposal Costs.

Part I requested site location and contact information, and the total volume of wastewater treated at the site. EPA used the wastewater flow information to characterize the size of the POTW.

Part II requested the number of industrial permits written, the cost to write the permits, the permitting fee structure, the percentage of industrial dischargers covered by National Categorical Standards (i.e., effluent guidelines), and the percentage of permits requiring expensive administrative activities. EPA used this information to estimate administrative burden and costs.

Part III requested information on the use or disposal of sewage sludge generated by the POTW. EPA required only POTWs that received discharges from an MP&M facility to complete Part III. The sewage sludge information requested included the amount generated, use or disposal method, metal levels, use or disposal costs, and the percentage of total metal loadings at the POTW from MP&M facilities. The Agency used this information to assess the potential changes in sludge handling resulting from the MP&M rule and to estimate economic benefits to the POTW related to sludge disposal and reduction in upsets/interference.

Data Review and Data Entry

EPA performed a detailed review of Parts I through III of the POTW detailed survey to evaluate the accuracy of information provided by the respondents. During review, the Agency coded responses to facilitate entry of data into the POTW detailed survey database. The database dictionary for the POTW survey identifies the database codes developed for this project, and is located in the MP&M Administrative Record. EPA contacted more than 95 POTW survey respondents by telephone to clarify incomplete or inconsistent information prior to data entry.

The Agency developed a database for the information provided by survey respondents. After review and coding, EPA entered data from 147 POTW surveys into the database using a double key-entry and verification procedure. The database dictionary presents the database structure and defines each field in the files for the POTW survey database.

3.2 Site Visits

The Agency visited 201 MP&M sites between 1986 and 1999 to collect information about MP&M unit operations, water use practices, pollution prevention and treatment technologies, and waste disposal methods, and to evaluate sites for potential inclusion in the MP&M sampling program (described in Section 3.3). In general, the Agency visited sites to encompass the range of sectors, unit operations, and wastewater treatment technologies within the MP&M industry (discussed in Section 3.2.1). Table 3-3 lists the number of sites visited within each MP&M sector. The total number of site visits presented in this table exceeds 201 because EPA classified some sites in multiple sectors. Figure 3-2 presents the number of MP&M sites visited and sampled by industrial sector.

Table 3-3

Number of Sites Visited Within Each MP&M Sector

Industrial Sectors	Total Number of Sites Visited	Industrial Sectors	Total Number of Sites Visited
Aerospace	13	Motor Vehicle	20
Aircraft	32	Office Machines	5
Bus and Truck	8	Ordnance	15
Electronic Equipment	22	Precious Metals and Jewelry	2
Hardware	15	Printed Wire Boards	9
Household Equipment	4	Railroad	10
Instrument	4	Ships and Boats	7
Job Shops	20	Stationary Industrial Equipment	14
Mobile Industrial Equipment	7	Miscellaneous Metal Products	0

Source: MP&M Site Visits.

3.2.1 Criteria for Site Selection

The Agency based site selection on information contained in the MP&M screener and detailed surveys. The Agency also contacted regional EPA personnel, state environmental agency personnel, and local pretreatment coordinators to identify MP&M sites believed to be operating in-process source reduction and recycling technologies and/or well-operated end-of-pipe wastewater treatment technologies.

The Agency used the following four general criteria to select sites that encompassed the range of sectors and unit operations within the MP&M industry.

1. The site performed MP&M unit operations in one of the industrial sectors. To assess the variation of unit operations and water use practices across sectors, the Agency visited sites in each of the MP&M sectors.

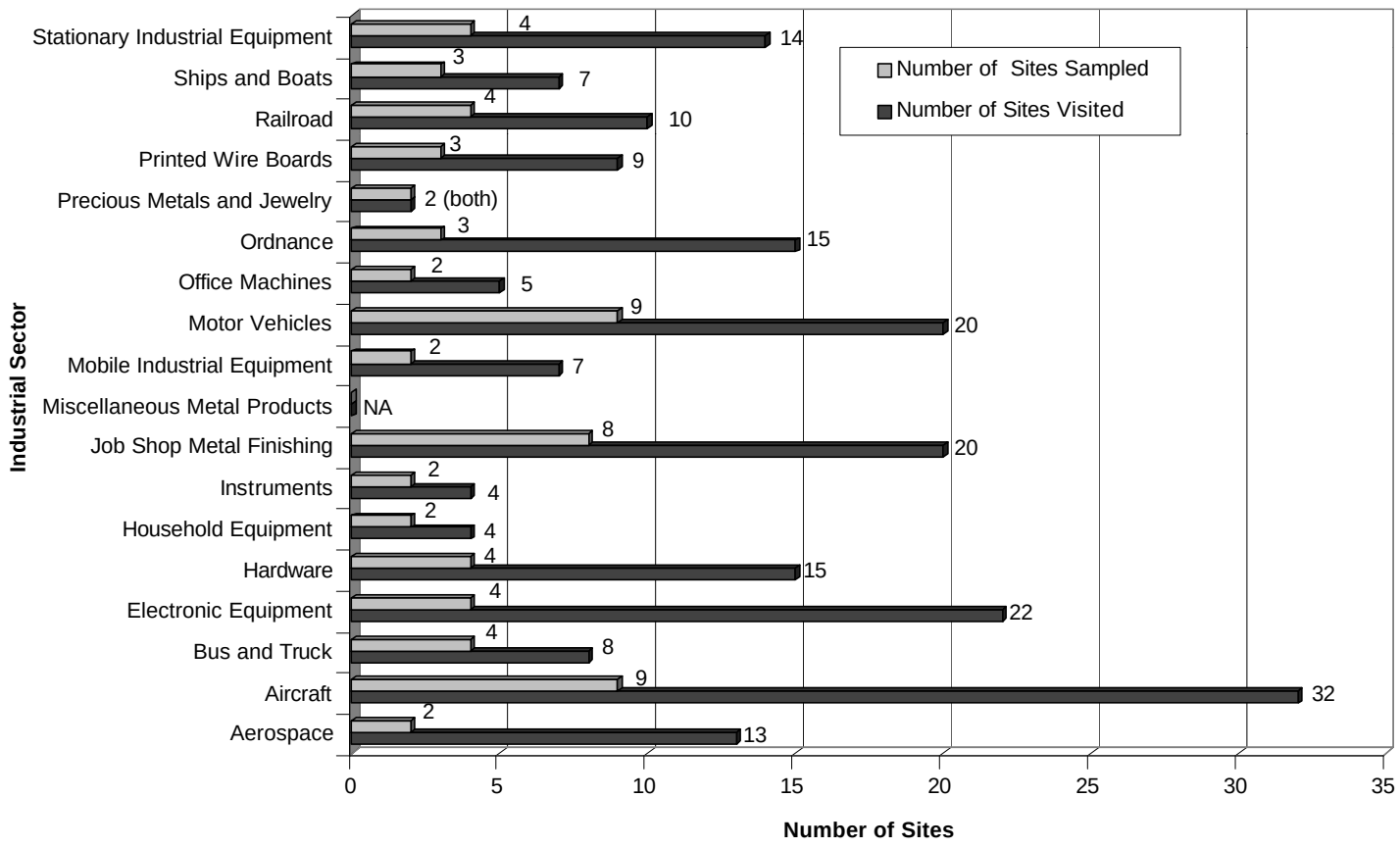

Figure 3-2. Number of MP&M Sites Visited and Sampled by Industrial Sector

2. The site performed MP&M unit operations that needed to be characterized for development of the regulation.

3. The site had water use practices that were believed to be representative of the best sites within an industrial sector.

4. The site operated in-process source reduction, recycling, or end-of-pipe treatment technologies EPA was evaluating in developing the MP&M technology options.

The Agency also attempted to visit sites of various sizes. EPA visited sites with wastewater flows ranging from less than 200 gpd to more than 1,000,000 gpd.

Site-specific selection criteria are discussed in site visit reports (SVRs) prepared for each site visited by EPA. The SVRs are located in the MP&M Administrative Record.

3.2.2 Information Collected

During the site visits, EPA collected the following types of information:

- Unit operations performed at the site and the types of metals processed through these operations;
- Purpose of unit operations performed and purpose for any process water and chemical additions used by the unit operations;
- Types and disposition of wastewater generated at the site;
- Types of in-process source reduction and recycling technologies performed at the site;
- Cross-media impacts of in-process source reduction and recycling technologies;
- Types of end-of-pipe treatment technologies performed at the site; and
- Logistical information required for sampling.

This information is documented in the SVRs for each site. Non-confidential SVRs can be found in the MP&M Public Record.

3.3 Wastewater and Solid Waste Sampling

The Agency conducted sampling episodes at 72 sites between 1986 and 1999 to obtain data on the characteristics of MP&M wastewater and solid wastes. In addition, EPA

performed sampling episodes to assess the following: the loading of pollutants to surface waters and POTWs from MP&M sites; the effectiveness of technologies designed to reduce and remove pollutants from MP&M wastewater; and the variation of MP&M wastewater characteristics across unit operations, metal types processed in each unit operation, and sectors. Table 3-4 indicates the number of sites sampled within each MP&M sector. The number of sampled sites presented in the table does not equal 72 because EPA conducted multiple sampling episodes at some sites, and EPA classified some sites in multiple sectors. Figure 3-2 on page 3-27 presents the number of sites visited and sampled by industrial sector.

Table 3-4

Number of Sites Sampled Within Each MP&M Sector

Industrial Sectors	Total Number of Sites Sampled	Industrial Sectors	Total Number of Sites Sampled
Aerospace	2	Motor Vehicle	9
Aircraft	9	Office Machines	2
Bus and Truck	4	Ordnance	3
Electronic Equipment	4	Precious Metals and Jewelry	2
Hardware	4	Printed Wiring Boards	3
Household Equipment	2	Railroad	4
Instruments	2	Ships and Boats	3
Job Shops	8	Stationary Industrial Equipment	4
Mobile Industrial Equipment	2	Miscellaneous Metal Products	0

Source: MP&M Sampling Episodes.

3.3.1 Criteria for Site Selection

The Agency used information collected during MP&M site visits to identify candidate sites for sampling. The Agency used the following general criteria to select sites for sampling:

- The site performed MP&M unit operations EPA was evaluating for development of the MP&M regulation;

- The site processed metals through MP&M unit operations for which the metal type/unit operation combination needed to be characterized for the sampling database;

- The site performed in-process source reduction, recycling, or end-of-pipe treatment technologies that EPA was evaluating for technology option development; and

- The site performed unit operations in a sector that EPA was evaluating for development of the MP&M regulation.

The Agency also attempted to sample at sites of various sizes. EPA sampled at sites with wastewater flows ranging from less than 200 gpd to more than 1,000,000 gpd.

After EPA selected a site for sampling, the Agency prepared a detailed sampling and analysis plan (SAP), based on the information contained in the SVR and follow-up correspondence with the site. EPA prepared the SAPs to ensure collection of samples that would be representative of the sampled waste streams. The SAPs contained the following types of information: site-specific selection criteria for sampling; information about site operations; sampling point locations and sample collection, preservation, and transportation procedures; site contacts; and sampling schedules.

3.3.2 Information Collected

In addition to wastewater and solid waste samples, the Agency collected the following types of information during each sampling episode:

- Dates and times of sample collection;
- Flow data corresponding to each sample;
- Production data corresponding to each sample of wastewater from MP&M unit operations;
- Design and operating parameters for source reduction, recycling, and treatment technologies characterized during sampling;
- Information about site operations that had changed since the site visit or that were not included in the SVR; and
- Temperature and pH of the sampled waste streams.

EPA documented all data collected during sampling episodes in the sampling episode report (SER) for each sampled site. Nonconfidential SERs are located in the MP&M Public Record. Many of the SERs also contain preliminary technical analyses of treatment system performance (where applicable) as compared to treatment performance data collected for previous metals industry regulatory development efforts.

3.3.3 Sample Collection and Analysis

The Agency collected, preserved, and transported all samples according to EPA protocols as specified in EPA's Sampling and Analysis Procedures for Screening of Industrial

Effluents for Priority Pollutants (1) and the MP&M Quality Assurance Project Plan (QAPP). These documents are located in the MP&M Administrative Record.

In general, EPA collected composite samples from wastewater streams with compositions that the Agency expected to vary over the course of a production period (e.g., overflowing rinse waters, wastewater from continuous recycling and treatment systems). The Agency collected grab samples from unit operation baths or rinses that the facility did not continuously discharge and the Agency did not expect to vary over the course of a production period. EPA also collected composite samples of wastewater treatment sludge at 11 facilities. EPA collected the required types of quality control samples as described in the MP&M QAPP, such as blanks and duplicate samples, to verify the precision and accuracy of sample analyses.

The Agency shipped samples via overnight air transportation to EPA-approved laboratories, where the samples were analyzed for metal and organic pollutants and additional parameters (including several water quality parameters). EPA analyzed metal pollutants using EPA Method 1620 (2), volatile organic pollutants using EPA Method 1624 (3), and semivolatile organic pollutants using EPA Method 1625 (4). Tables 3-5 and 3-6 list the metal and organic pollutants, respectively, analyzed using these methods. Table 3-5 also lists additional metal pollutants that EPA analyzed in the MP&M sampling program, but, as specified by EPA Method 1620, were not subject to the rigorous quality assurance/quality control procedures established by the QAPP. The Agency used these metals analyses for screening purposes and did not select the metals for regulation in this rulemaking (see Section 7.0). EPA analyzed additional parameters, including several water quality parameters, using analytical methods contained in EPA's Methods for Chemical Analysis of Water and Wastes (5). Table 3-7 lists these parameters, along with the method and technique used to analyze for each parameter. Method descriptions are included in the MP&M QAPP. The specific parameters measured in each sample are listed in the SER for each sampling episode.

Quality control measures used in performing all analyses complied with the guidelines specified in the analytical methods and in the MP&M QAPP. EPA reviewed all analytical data to ensure that these measures were followed and that the resulting data were within the QAPP-specified acceptance criteria for accuracy and precision.

As discussed previously, upon receipt and review of the analytical data for each site, EPA prepared an SER to document the data collected during sampling, the analytical results, and the technical analyses of the results. The SAPs and correspondence with site personnel are included as appendices to the SERs.

Table 3-5

Metal Constituents Measured Under the MP&M Sampling Program (EPA Method 1620)

Metal Constituents		
ALUMINUM	COBALT	SELENIUM
ANTIMONY	COPPER	SILVER
ARSENIC	IRON	SODIUM
BARIUM	LEAD	THALLIUM
BERYLLIUM	MAGNESIUM	TIN
BORON	MANGANESE	TITANIUM
CADMIUM	MERCURY	VANADIUM
CALCIUM	MOLYBDENUM	YTTRIUM
CHROMIUM	NICKEL	ZINC
Additional Metal Constituents[a] Not Subject to Rigorous QA/QC Procedures Per Method 1620		
BISMUTH	LANTHANUM	SAMARIUM
CERIUM	LITHIUM	SCANDIUM
DYSPROSIUM	LUTETIUM	SILICON
ERBIUM	NEODYMIUM	STRONTIUM
EUROPIUM	NIOBIUM	SULFUR
GADOLINIUM	OSMIUM	TANTALUM
GALLIUM	PALLADIUM	TELLURIUM
GERMANIUM	PHOSPHORUS	TERBIUM
GOLD	PLATINUM	THORIUM
HAFNIUM	POTASSIUM	THULIUM
HOLMIUM	PRASEODYMIUM	TUNGSTEN
INDIUM	RHENIUM	URANIUM
IODINE	RHODIUM	YTTERBIUM
IRIDIUM	RUTHENIUM	ZIRCONIUM

[a]Analyses for these metals were used for screening purposes, and the metals were not selected for regulation in this rulemaking.

Source: EPA Method 1620.

Table 3-6

Organic Constituents Measured Under the MP&M Sampling Program (EPA Methods 1624 and 1625)

Volatile Organic Constituents (EPA Method 1624)	
ACRYLONITRILE	TRANS-1,4-DICHLORO-2-BUTENE
BENZENE	TRIBROMOMETHANE
BROMODICHLOROMETHANE	TRICHLOROETHENE
BROMOMETHANE	TRICHLOROFLUOROMETHANE
CARBON DISULFIDE	VINYL ACETATE
CHLOROACETONITRILE	VINYL CHLORIDE
CHLOROBENZENE	1,1-DICHLOROETHANE
CHLOROETHANE	1,1-DICHLOROETHENE
CHLOROFORM	1,1,1-TRICHLOROETHANE
CHLOROMETHANE	1,1,1,2-TETRACHLOROETHANE
CIS-1,3-DICHLOROPROPENE	1,1,2-TRICHLOROETHANE
CROTONALDEHYDE	1,1,2,2-TETRACHLOROETHANE
DIBROMOCHLOROMETHANE	1,2-DIBROMOETHANE
DIBROMOMETHANE	1,2-DICHLOROETHANE
DIETHYL ETHER	1,2-DICHLOROPROPANE
ETHYL CYANIDE	1,2,3-TRICHLOROPROPANE
ETHYL METHACRYLATE	1,3-BUTADIENE, 2-CHLORO
ETHYLBENZENE	1,3-DICHLOROPROPANE
IODOMETHANE	1,4-DIOXANE
ISOBUTYL ALCOHOL	2-BUTANONE
M-XYLENE	2-CHLOROETHYL VINYL ETHER
METHYL METHACRYLATE	2-HEXANONE
METHYLENE CHLORIDE	2-PROPANONE
O+P-XYLENE	2-PROPEN-1-OL
TETRACHLOROETHENE	2-PROPENAL
TETRACHLOROMETHANE	2-PROPENENITRILE, 2-METHYL-
TOLUENE	3-CHLOROPROPENE
TRANS-1,2-DICHLOROETHENE	4-METHYL-2-PENTANONE
TRANS-1,3-DICHLOROPROPENE	
Semivolatile Organic Constituents (EPA Method 1625)	
ACENAPHTHENE	BENZO(A)ANTHRACENE
ACENAPHTHYLENE	BENZO(A)PYRENE
ACETOPHENONE	BENZO(B)FLUORANTHENE
ALPHA-TERPINEOL	BENZO(GHI)PERYLENE
ANILINE	BENZO(K)FLUORANTHENE
ANILINE, 2,4,5-TRIMETHYL-	BENZOIC ACID
ANTHRACENE	BENZONITRILE, 3,5-DIBROMO-4-HYDROXY-
ARAMITE	BENZYL ALCOHOL
BENZANTHRONE	BETA-NAPHTHYLAMINE
BENZENETHIOL	BIPHENYL

Table 3-6 (Continued)

Semivolatile Organic Constituents (EPA Method 1625)	
BENZIDINE	BIPHENYL, 4-NITRO
BIS(2-CHLOROETHOXY)METHANE	N-EICOSANE
BIS(2-CHLOROETHYL) ETHER	N-HEXACOSANE
BIS(2-CHLOROISOPROPYL) ETHER	N-HEXADECANE
BIS(2-ETHYLHEXYL) PHTHALATE	N-NITROSODI-N-BUTYLAMINE
BUTYL BENZYL PHTHALATE	N-NITROSODIETHYLAMINE
CARBAZOLE	N-NITROSODIMETHYLAMINE
CHRYSENE	N-NITROSODIPHENYLAMINE
CIODRIN	N-NITROSOMETHYLETHYLAMINE
CROTOXYPHOS	N-NITROSOMETHYLPHENYLAMINE
DI-N-BUTYL PHTHALATE	N-NITROSOMORPHOLINE
DI-N-OCTYL PHTHALATE	N-NITROSOPIPERIDINE
DI-N-PROPYLNITROSAMINE	N-OCTACOSANE
DIBENZO(A,H)ANTHRACENE	N-OCTADECANE
DIBENZOFURAN	N-TETRACOSANE
DIBENZOTHIOPHENE	N-TETRADECANE
DIETHYL PHTHALATE	N-TRIACONTANE
DIMETHYL PHTHALATE	N,N-DIMETHYLFORMAMIDE
DIMETHYL SULFONE	NAPHTHALENE
DIPHENYL ETHER	NITROBENZENE
DIPHENYLAMINE	O-ANISIDINE
DIPHENYLDISULFIDE	O-CRESOL
ETHANE, PENTACHLORO-	O-TOLUIDINE
ETHYL METHANESULFONATE	O-TOLUIDINE, 5-CHLORO-
ETHYLENETHIOUREA	P-CHLOROANILINE
FLUORANTHENE	P-CRESOL
FLUORENE	P-CYMENE
HEXACHLOROBENZENE	P-DIMETHYLAMINOAZOBENZENE
HEXACHLOROBUTADIENE	P-NITROANILINE
HEXACHLOROCYCLOPENTADIENE	PENTACHLOROBENZENE
HEXACHLOROETHANE	PENTACHLOROPHENOL
HEXACHLOROPROPENE	PENTAMETHYLBENZENE
HEXANOIC ACID	PERYLENE
INDENO(1,2,3-CD)PYRENE	PHENACETIN
ISOPHORONE	PHENANTHRENE
ISOSAFROLE	PHENOL
LONGIFOLENE	PHENOL, 2-METHYL-4,6-DINITRO-
MALACHITE GREEN	PHENOTHIAZINE
MESTRANOL	PRONAMIDE
METHAPYRILENE	PYRENE
METHYL METHANESULFONATE	PYRIDINE
N-DECANE	RESORCINOL
N-DOCOSANE	SAFROLE
N-DODECANE	SQUALENE
STYRENE	2-NITROANILINE
THIANAPHTHENE	2-NITROPHENOL
THIOACETAMIDE	2-PHENYLNAPHTHALENE
THIOXANTHE-9-ONE	2-PICOLINE
TOLUENE, 2,4-DIAMINO-	2,3-BENZOFLUORENE

Table 3-6 (Continued)

Semivolatile Organic Constituents (EPA Method 1625)	
1-BROMO-2-CHLOROBENZENE	2,3,4,6-TETRACHLOROPHENOL
1-BROMO-3-CHLOROBENZENE	2,3,6-TRICHLOROPHENOL
1-CHLORO-3-NITROBENZENE	2,4 -DICHLOROPHENOL
1-METHYLFLUORENE	2,4-DIMETHYLPHENOL
1-METHYLPHENANTHRENE	2,4-DINITROPHENOL
1-NAPHTHYLAMINE	2,4-DINITROTOLUENE
1-PHENYLNAPHTHALENE	2,4,5-TRICHLOROPHENOL
1,2-DIBROMO-3-CHLOROPROPANE	2,4,6-TRICHLOROPHENOL
1,2-DICHLOROBENZENE	2,6-DI-TERT-BUTYL-P-BENZOQUINONE
1,2-DIPHENYLHYDRAZINE	2,6-DICHLORO-4-NITROANILINE
1,2,3-TRICHLOROBENZENE	2,6-DICHLOROPHENOL
1,2,3-TRIMETHOXYBENZENE	2,6-DINITROTOLUENE
1,2,4-TRICHLOROBENZENE	3-METHYLCHOLANTHRENE
1,2,4,5-TETRACHLOROBENZENE	3-NITROANILINE
1,2:3,4-DIEPOXYBUTANE	3,3'-DICHLOROBENZIDINE
1,3-DICHLORO-2-PROPANOL	3,3'-DIMETHOXYBENZIDINE
1,3-DICHLOROBENZENE	3,6-DIMETHYLPHENANTHRENE
1,3,5-TRITHIANE	4-AMINOBIPHENYL
1,4-DICHLOROBENZENE	4-BROMOPHENYL PHENYL ETHER
1,4-DINITROBENZENE	4-CHLORO-2-NITROANILINE
1,4-NAPHTHOQUINONE	4-CHLORO-3-METHYLPHENOL
1,5-NAPHTHALENEDIAMINE	4-CHLOROPHENYL PHENYL ETHER
2-(METHYLTHIO)BENZOTHIAZOLE	4-NITROPHENOL
2-CHLORONAPHTHALENE	4,4'-METHYLENEBIS(2-CHLOROANILINE)
2-CHLOROPHENOL	4,5-METHYLENE PHENANTHRENE
2-ISOPROPYLNAPHTHALENE	5-NITRO-O-TOLUIDINE
2-METHYLBENZOTHIOAZOLE	7,12-DIMETHYLBENZ(A)ANTHRACENE
2-METHYLNAPHTHALENE	

Source: EPA Methods 1624 and 1625.

Table 3-7

Additional Parameters Measured Under the MP&M Sampling Program

Parameter	EPA Method
Acidity	305.1
Alkalinity	310.1
Ammonia as Nitrogen	350.1
BOD 5-Day (Carbonaceous)	405.1
Chemical Oxygen Demand (COD)	410.1 410.2
Chloride	325.3
Cyanide, Total	335.2
Cyanide, Amenable	335.1
Fluoride	340.2
Nitrogen, Total Kjeldahl	351.2
Oil and Grease	413.2
Oil and Grease (as HEM)	1664
pH	150.1
Phenolics, Total Recoverable	420.2
Phosphorus, Total	365.4
Sulfate	375.4
Sulfide, Total	376.1, 376.2
Total Dissolved Solids (TDS)	160.1
Total Organic Carbon (TOC)	415.1
Total Petroleum Hydrocarbons (as SGT-HEM)	1664
Total Suspended Solids (TSS)	160.2
Ziram	630.1

Source: EPA Methods for Chemical Analysis of Water and Wastes.

3.4 Other Sampling Data

Extension of the MP&M effluent guidelines schedule, as discussed in Section 2.2, allowed more stakeholder involvement for data collection. The Association of American Railroads (AAR), the Hampton Roads Sanitation District (HRSD), and the Los Angeles County Sanitation Districts (LACSD) proposed potential sampling sites to the Agency, and EPA visited these sites to identify candidates for sampling. After conducting site visits, EPA selected five sites for sampling episodes.

EPA selected the five sites to characterize end-of-pipe treatment technologies in metal finishing and aircraft parts job shops and the railroad and shipbuilding industrial sectors. The site sampled by AAR performs railroad line maintenance and uses dissolved air flotation (DAF) to treat MP&M process wastewater. The site sampled by HRSD manufactures ships and boats and uses DAF, chemical precipitation, and cyanide destruction to treat process wastewater. The three sites sampled by LACSD were two metal finishing job shops and one aircraft parts manufacturing job shop. EPA selected the LACSD sites to provide data for cyanide treatment and also conducted effluent variability sampling at one of the metal finishing job shops.

EPA prepared detailed SAPs based on the information collected during the five site visits, and AAR, HRSD and LACSD collected the wastewater samples. EPA also prepared the sampling episode reports. In addition to the wastewater samples, sampling personnel obtained the collection date and time, sample flow data, treatment unit design and operating parameters, and temperature and pH of the sampled waste streams. All data collected during sampling episodes are documented in the SER for each sampled site which are located in the MP&M Administrative Record. The SERs also contain preliminary technical analyses of treatment system performance (where applicable) as compared to treatment performance data collected for previous metals industry regulatory development efforts. EPA combined these data with data collected from the MP&M sampling program.

EPA collected, preserved, and transported all samples according to EPA protocols as specified in EPA's Sampling and Analysis Procedures for Screening of Industrial Effluents for Priority Pollutants and the MP&M QAPP. Shipping and analysis of the samples were similar to that discussed in Section 3.3 with the exception that some samples were shipped directly to internal sanitation district laboratories for analysis. Pollutant parameters and analytical methods were agreed upon by EPA, AAR, HRSD, and LACSD and were treated as equivalent to the EPA MP&M sampling program.

3.5 Other Industry-Supplied Data

EPA evaluated other industry data in developing the MP&M effluent guidelines. The data sources reviewed included public comments to the 1995 MP&M Phase I proposed rule, the Metal Finishing F006 Benchmark Study (8), data supporting the Final Rule for the F006 Accumulation Time Extension (65 FR 12377, March 8, 2000), data provided by the Aluminum Anodizing Council (AAC), the American Wire Producers Association (AWPA), and the Aerospace Association. EPA also reviewed data from storm water pollution prevention plans

provided by several shipbuilding sites, dry dock data from a shipbuilding site, and data from periodic compliance monitoring reports/discharge monitoring reports for 14 sites that were part of the Agency's wastewater sampling program. Data submitted with the MP&M Phase I comments did not include the quality control data required to verify the accuracy of sample analyses and, therefore, EPA did not use the data.

3.6 Other Data Sources

In developing the MP&M effluent guidelines, EPA evaluated the following existing data sources:

1. EPA Engineering and Analysis Division (EAD) databases from development of effluent guidelines for Miscellaneous metals industries;

2. The Office of Research and Development (ORD) National Risk Management and Research Laboratory (NRMRL) treatability database;

3. The Fate of Priority Pollutants in Publicly Owned Treatment Works (50 POTW Study) database;

4. The Domestic Sewage Study; and

5. The Toxics Release Inventory (TRI) database.

These data sources and their uses for the development of the MP&M effluent guidelines are discussed below.

3.6.1 EPA/EAD Databases

As discussed in Section 2.0, EPA has promulgated effluent guidelines for 13 metals industries. In developing these past effluent guidelines, EPA collected wastewater samples to characterize the unit operations and treatment systems at sites in these industries. MP&M sites operate many of the same or similar sampled unit operations and treatment systems; therefore, EPA evaluated these data for transfer to the MP&M effluent guidelines development effort.

For the MP&M pollutant loading and wastewater characterization efforts, EPA reviewed the data collected for unit operations performed at both MP&M sites and at sites in the other metals industries. EPA reviewed the Technical Development Documents (TDDs), sampling episode reports, and supporting rulemaking record materials for the other metals industries to identify available data. EPA used these data for the preliminary assessment of the MP&M industry, but did not use these data for the MP&M pollutant loadings because EPA obtained sufficient data from the MP&M sampling program to characterize the MP&M unit operations.

For the MP&M technology effectiveness assessment effort, EPA reviewed sampling data collected to characterize treatment systems for the development of effluent

guidelines for Miscellaneous metals industries. For several previous effluent guidelines, EPA used treatment data from metals industries to develop the Combined Metals Database (CMDB), which served as the basis for developing limits for these industries. EPA also developed a separate database used as the basis for limits for the Metal Finishing category. EPA used the CMDB and Metal Finishing data as a guide in identifying well-designed and well-operated MP&M treatment systems. EPA did not use these data in developing the MP&M technology effectiveness concentrations, since the Agency collected sufficient data from MP&M sites to develop technology effectiveness concentrations.

3.6.2 Fate of Priority Pollutants in Publicly Owned Treatment Works Database

In September 1982, EPA published the Fate of Priority Pollutants in Publicly Owned Treatment Works (6), referred to as the 50 POTW Study. The purpose of this study was to generate, compile, and report data on the occurrence and fate of the 129 priority pollutants in 50 POTWs. The report presents all of the data collected, the results of preliminary evaluations of these data, and the results of calculations to determine the following:

- The quantity of priority pollutants in the influent to POTWs;
- The quantity of priority pollutants discharged from the POTWs;
- The quantity of priority pollutants in the effluent from intermediate process streams; and
- The quantity of priority pollutants in the POTW sludge streams.

EPA used the data from this study as one of the ways to assess removal by POTWs of MP&M pollutants of concern. To provide consistency for data analysis and establishment of removal efficiencies, EPA reviewed the 50-POTW Study and standardized the reported minimum levels of quantitation (MLs) for use in the MP&M proposed rule. EPA's review of the 50-POTW Study is described in more detail in Section 7.3.1, in the appendices to Section 7, and in memoranda located in Section 6.4 of the MP&M Public Record.

3.6.3 National Risk Management Research Laboratory (NRMRL) Treatability Database

EPA's Office of Research and Development (ORD) developed the NRMRL (formerly RREL) treatability database to provide data on the removal and destruction of chemicals in various types of media, including water, soil, debris, sludge, and sediment. This database contains treatability data from POTWs as well as industrial facilities for various pollutants. The database includes physical and chemical data for each pollutant, the types of treatment used to treat the specific pollutants, the types of wastewater treated, the size of the POTW or industrial plant, and the treatment concentrations achieved. EPA used the NRMRL database to estimate pollutant reductions achieved by POTWs for MP&M pollutants of concern that were not found in the 50-POTW database. The Agency used these prcent removal estimates in calculating the pollutant

loads removed by indirect dishcarging MP&M facilities. Because the 50-POTW database contained sufficient data, EPA did not use these percent removal estimates in the pass-through analysis. EPA used only treatment technologies representative of typical POTW secondary treatment operations (i.e., activated sludge, activated sludge with filtration, aerated lagoons). The Agency further edited these files to include information pertaining only to domestic or industrial wastewater. The Agency used these percent removal estimates in calculating the pollutant loads removed by indirect discharging MP&M facilities. Because the 50-POTW database contained sufficient data, EPA did not use these percent removal estimates in the pass-through analysis. EPA used pilot-scale and full-scale data, and eliminated bench-scale data and data from less reliable references.

3.6.4 The Domestic Sewage Study

In February 1986, EPA issued the Report to Congress on the Discharge of Hazardous Wastes to Publicly Owned Treatment Works (7), referred to as the Domestic Sewage Study (DSS). This report, which was based in part on the 50 POTW Study, revealed a significant number of sites discharging pollutants to POTWs. These pollutants are a threat to the treatment capability of the POTW. These pollutants were not regulated by national effluent regulations. Some of the major sites identified were in the metals industries, particularly one called equipment manufacturing and assembly. This industry included sites that manufacture such products as office machines, household appliances, scientific equipment, and industrial machine tools and equipment. The DSS estimated that this category discharges 7,715 metric tons per year of priority hazardous organic pollutants, which are presently unregulated. Data on priority hazardous metals discharges were unavailable for this category. Further review of the DSS revealed Miscellaneous categories that were related to metals industries, namely the motor vehicle category, which includes servicing of new and used cars and engine and parts rebuilding, and the transportation services category, which includes railroad operations, truck service and repair, and aircraft servicing and repair. EPA used the information in the DSS in developing the 1989 Preliminary Data Summary (PDS) for the MP&M category.

3.6.5 Toxics Release Inventory (TRI) Database

The TRI database contains specific toxic chemical release and transfer information from manufacturing facilities throughout the United States. This database was established under the Emergency Planning and Community Right-to-Know Act of 1986 (EPCRA), which Congress passed to promote planning for chemical emergencies and to provide information to the public about the presence and release of toxic and hazardous chemicals. Each year, manufacturing facilities meeting certain activity thresholds must report the estimated releases and transfers of listed toxic chemicals to EPA and to the state or tribal entity in whose jurisdiction the facility is located. The TRI list includes more than 300 chemicals in 20 chemical categories.

EPA considered using the TRI database in developing the MP&M effluent guidelines. However, EPA did not use TRI data on wastewater discharges from MP&M sites because sufficient data were not available for effluent guidelines development. For example, in developing the MP&M effluent guidelines, EPA uses wastewater influent concentrations to

characterize a facility's wastewater and to calculate treatment efficiency (i.e., percent removal across the treatment system). The TRI database does not provide concentrations for the influent to a facility's treatment system. EPA also did not use the data on wastewater discharge because many MP&M sites do not meet the reporting thresholds for the TRI database.

3.7 References

1. U.S. Environmental Protection Agency. Sampling and Analysis Procedures for Screening of Industrial Effluents for Priority Pollutants, April 1977.

2. U.S. Environmental Protection Agency. Method 1620 Draft - Metals by Inductively Coupled Plasma Atomic Emission Spectroscopy and Atomic Absorption Spectroscopy, September 1989.

3. U.S. Environmental Protection Agency. Method 1624 Revision C - Volatile Organic Compounds by Isotope Dilution GCMS, June 1989.

4. U.S. Environmental Protection Agency. Method 1625 Revision C - Semivolatile Organic Compounds by Isotope Dilution GCMS, June 1989.

5. U.S. Environmental Protection Agency. Methods for Chemical Analysis of Water and Wastes, EPA-600/4-79-020, Washington, DC, March 1979.

6. U.S. Environmental Protection Agency. Fate of Priority Pollutants in Publicly Owned Treatment Works, EPA 440/1-82/303, Washington, DC, September, 1982.

7. U.S. Environmental Protection Agency. Report to Congress on the Discharge of Hazardous Wastes to Publicly Owned Treatment Works, EPA 530-SW-86-004, Washington, DC, February 1986.

8. U.S. Environmental Protection Agency. Metal Finishing F006 Benchmark Study, Washington, DC, September 1998.

4.0 INDUSTRY DESCRIPTION

As discussed in Section 3.0, the MP&M Point Source Category covers sites that perform manufacturing, rebuilding, or maintenance activities while processing metal parts, machinery, or metal products. The category includes 18 industrial sectors: aerospace, aircraft, bus and truck, electronic equipment, hardware, household equipment, instruments, job shops, miscellaneous metal products, mobile industrial equipment, motor vehicle, office machines, ordnance, precious metals and jewelry, printed wiring boards, railroad, ships and boats, and stationary industrial equipment.

This section describes the MP&M industry. Section 4.1 presents an overview of the industry; Section 4.2 provides a general discussion of unit operations performed, metal types processed, and volumes of wastewater discharged; Section 4.3 discusses trends in the industry; and Section 4.4 lists the references used for Section 4.

4.1 Overview of the Industry

This section discusses the MP&M industry, including the number and size of MP&M sites, the geographic distribution of these sites, the number of wastewater discharging sites, and the number of non-wastewater-discharging sites.

4.1.1 Number and Size of MP&M Sites

Based on the MP&M survey database, there are approximately 89,000 MP&M sites in the United States. Based on detailed survey results, approximately 63,000 MP&M sites discharge process wastewater. The remaining 26,000 sites fall into one of three categories: zero dischargers, non-water-users, or contract haulers.

MP&M wastewater-discharging sites range in size from sites with less than 10 employees to sites with tens of thousands of employees, and with wastewater discharge flow rates of less than 100 gallons per year to more than 100 million gallons per year. The following figure summarizes the estimated number of wastewater-discharging MP&M sites by number of employees and estimated total discharge flow. This shows that approximately 92 percent of MP&M sites have 500 or fewer employees and approximately 78 percent have 100 or fewer employees.

As shown in Figure 4-1 the number of employees at a site does not necessarily correspond with the discharge flow at the site. [This is demonstrated by the fact that sites with greater than 500 employees account for only 38 percent of the total industry flow.] Section 4.1.3 presents additional information on the estimated number of MP&M sites by discharge flow range.

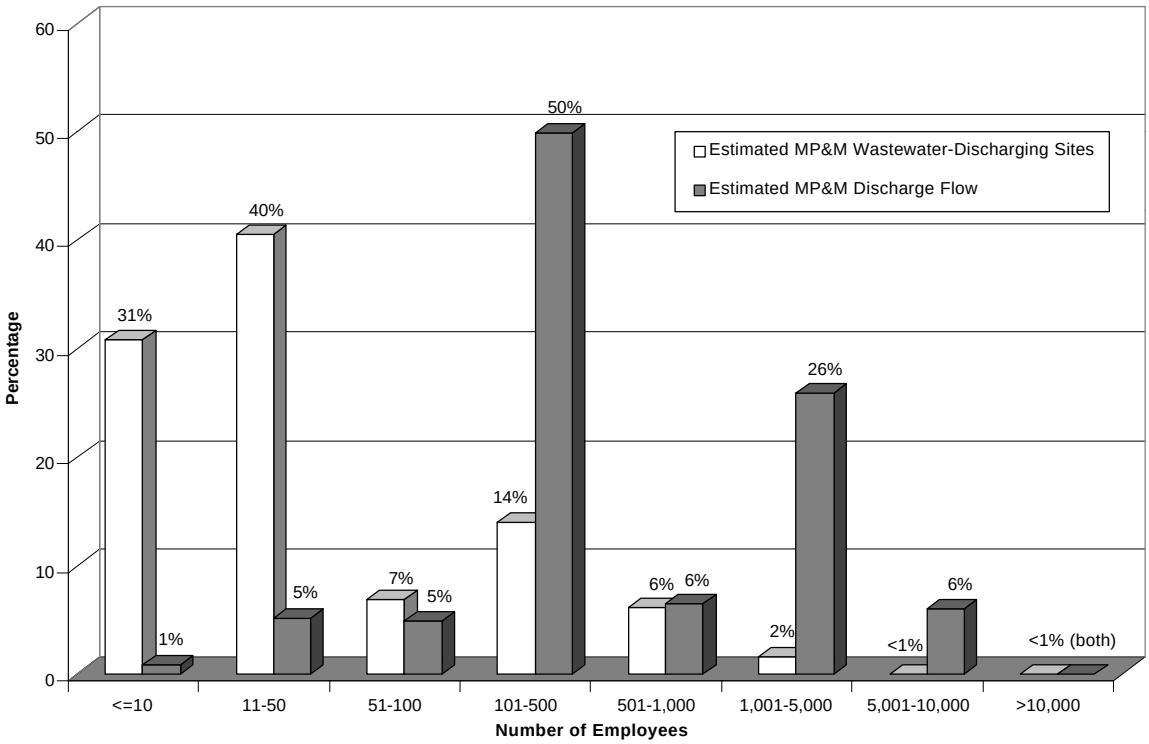

Source: MP&M Survey Database.
Note: There are 62,749 wastewater-discharging MP&M sites. Total MP&M wastewater flow is 122 billion gallons per year.

Figure 4-1. MP&M Wastewater-Discharging Sites by Number of Employees and Estimated Total Discharge Flow

4.1.2 Geographic Distribution

MP&M wastewater-discharging facilities are located throughout the United States. EPA received survey data from all 10 EPA regions and from 48 states. MP&M facilities are mostly concentrated in industrialized areas, with the highest concentration of facilities in California, Pennsylvania, and Illinois. The following map shows the estimated number of MP&M facilities located in each EPA region.

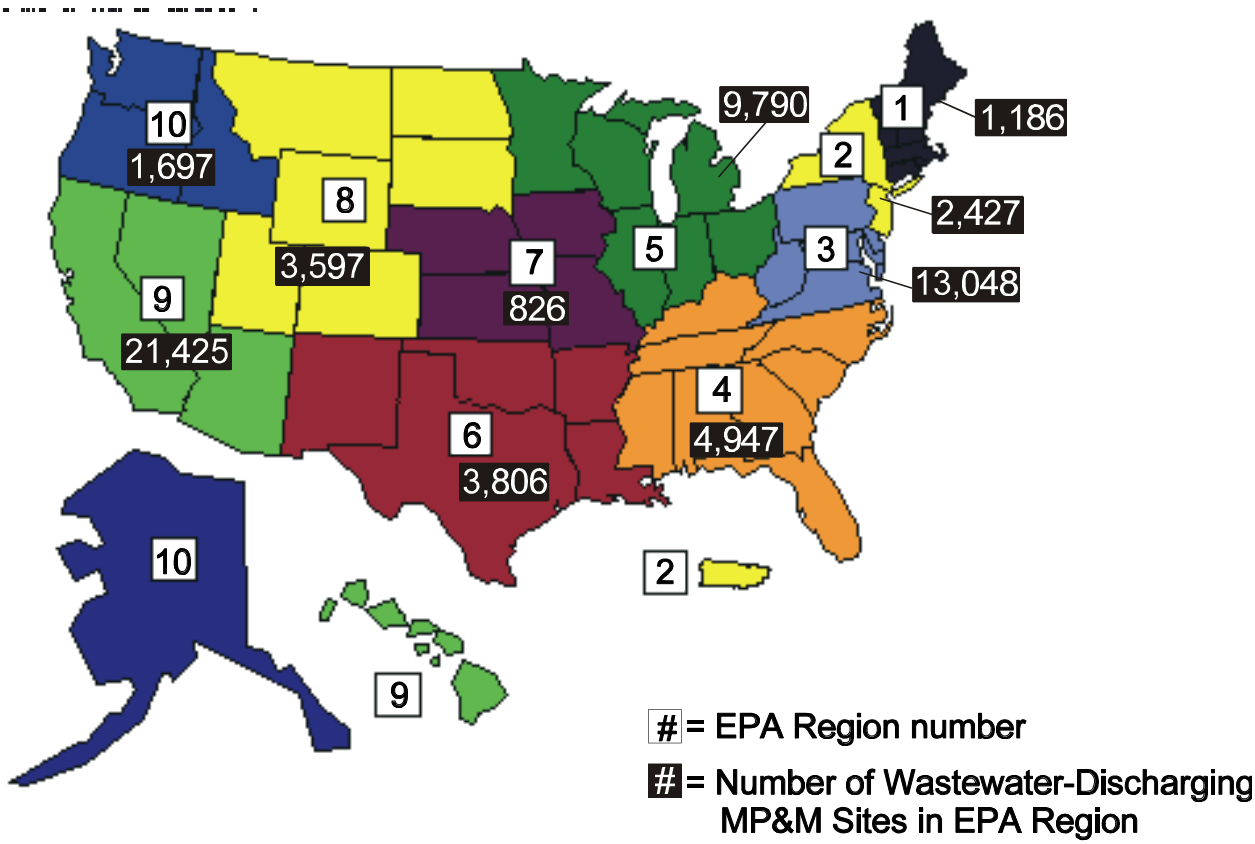

Figure 4-2. Estimated Number of MP&M Facilities by EPA Region

4.1.3 Wastewater-Discharging Sites

The MP&M category includes 18 industrial sectors. Table 4-1 summarizes the number of MP&M wastewater-discharging sites by sector. Because some sites perform operations in more than one sector, the sum of wastewater-discharging sites by sector exceeds the total number of wastewater-discharging sites identified in the survey. As indicated in Table 4-1, the railroad sector has the smallest number of wastewater-discharging sites (97) and the job shops sector has the largest number of wastewater-discharging sites (33,683).

Table 4-1

MP&M Wastewater-Discharging Sites by Sector

Sector	Estimated Number of Sites That Discharge Process Waste Water[a]
Aerospace	312
Aircraft	1,356
Bus and Truck	1,861
Electronic Equipment	2,289
Hardware	6,275
Household Equipment	2,003
Instruments	3,208
Iron and Steel [c]	153
Job Shop [b]	33,683
Miscellaneous Metal Products	3,030
Mobile Industrial Equipment	879
Motor Vehicle	1,506
Municipality [c]	4,342
Office Machine	249
Ordnance	403
Precious Metals and Jewelry	307
Printed Circuit Boards	617
Railroad	97
Ships and Boats	273
Stationary Industrial Equipment	6,217

Source: MP&M Survey Database.

[a] Because some sites perform operations in more than one sector, the sum of sites by sector exceeds the total number of sites that discharge water (62,749).

[b] The Job Shop Sector includes any MP&M facility that owns < 50% of the products they work on (annual area basis). This includes metal finishing job shops, but also may include other job shops such as painting or assembly job shops.

[c] Technical surveys for these sites did not include sector information therefore they were listed separately for this table.

In addition to description by sector, MP&M operations can also be described by two types of activities: manufacturing and rebuilding/maintenance. For the purpose of the MP&M regulation, EPA defines these activities below:

- Manufacturing is the series of unit operations necessary to produce metal products, and is generally performed in a production environment.

- Rebuilding/maintenance is the series of unit operations necessary to disassemble used metal products into components, replace the components or subassemblies or restore them to original function, and

reassemble the metal products. These operations are intended to keep metal products in operating condition and can be performed in either a production or a non-production environment.

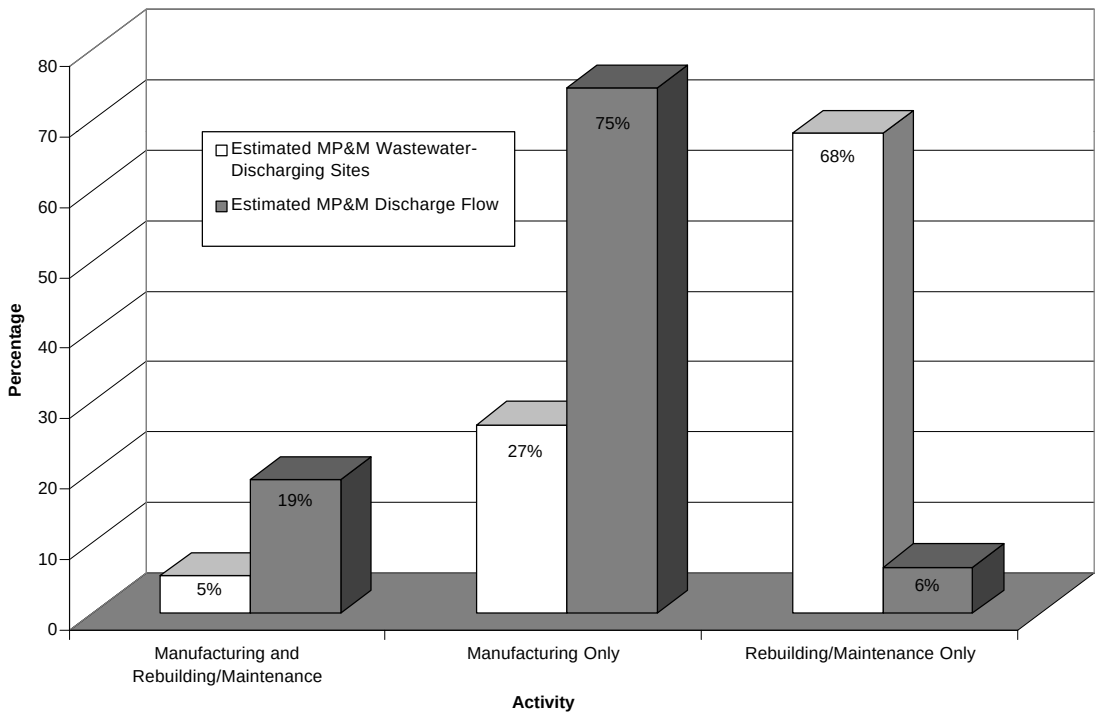

Source: MP&M Survey Database.
Note: There are 62,749 wastewater-discharging MP&M sites. Total wastewater flow is 122 billion gallons per year.

Figure 4-3. MP&M Wastewater-Discharging Sites and Total Discharge Flow by Activity

Figure 4-3 summarizes the estimated number of MP&M wastewater-discharging sites and baseline (i.e., current) total discharge flow by activity. The largest number of sites (42,733) perform rebuilding/maintenance only and account for the smallest amount (6 percent) of the total estimated discharge flow for the industry. The smallest number of sites (3,239) perform both manufacturing and rebuilding/maintenance activities but represent 19 percent of the total estimated discharge flow for the industry.

MP&M sites include direct dischargers, indirect dischargers, and those that are both direct and indirect dischargers. A direct discharger is a site that discharges wastewater to a surface water (e.g., river, lake, ocean). An indirect discharger is a site that discharges wastewater to a publicly owned treatment works (POTW). For the purposes of the MP&M regulation, EPA considers sites discharging exclusively to privately owned treatment works to be zero dischargers

that contract haul their wastewater to centralized waste treatment facilities. Figure 4-4 summarizes the number of MP&M wastewater-discharging sites and baseline total discharge flow by discharge status. This figure shows that the majority of MP&M discharging facilities are indirect dischargers.

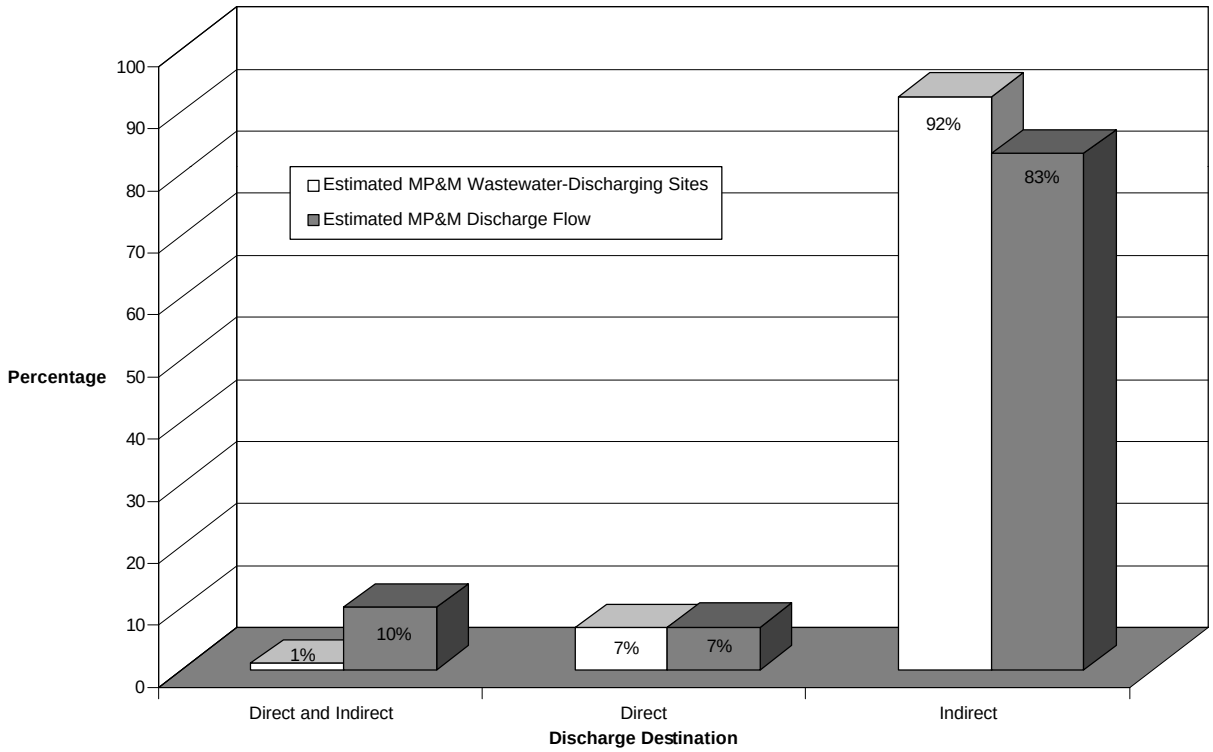

Source: MP&M Survey Database.
Note: There are 62,749 wastewater-discharging MP&M sites. Total MP&M wastewater flow is 122 billion gallons per year.

Figure 4-4. MP&M Wastewater-Discharging Sites and Total Discharge Flow by Discharge Status

Wastewater discharge flows from MP&M sites range from less than 100 gallons per year to greater than 100 million gallons per year. Figure 4-5 summarizes the wastewater discharge flow ranges for MP&M sites. As this figure shows, sites discharging more than one million gallons per year (approximately 10 percent of the total sites) account for approximately 97 percent of the total wastewater discharge from the industry. In contrast, sites discharging less than 100,000 gallons per year (approximately 72% of the total sites) account for less than 1% of the overall wastewater discharge flow for the industry.

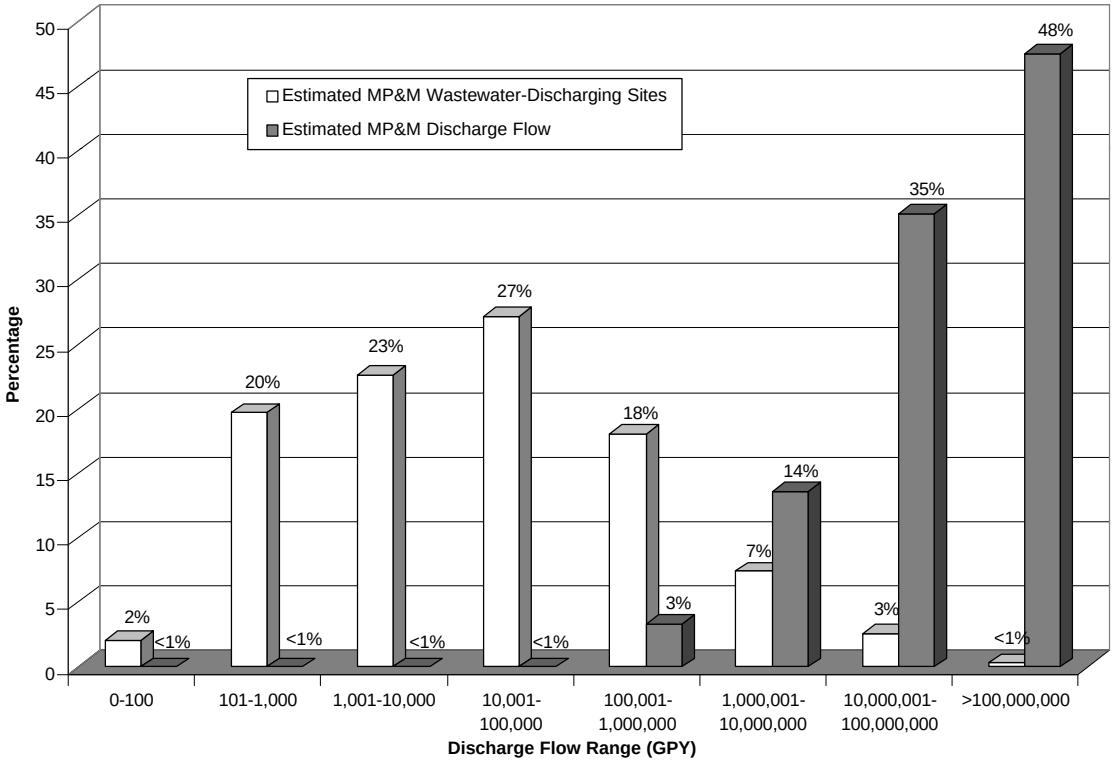

Source: MP&M Survey Database.
Note: There are 62,749 wastewater-discharging MP&M sites. Total MP&M wastewater flow is 122 billion gallons per year.

Figure 4-5. MP&M Wastewater-Discharging Sites by Total Discharge Flow

4.1.4 Non-Wastewater-Discharging Sites

Based on the results of the survey, approximately 26,000 MP&M sites do not use process water (dry sites) or use but do not discharge process water. Based on information from the MP&M detailed surveys, site visits, and technical literature, these sites achieve zero discharge of process wastewater in one of the following ways:

- Contract haul all process wastewater generated on site;
- Discharge process wastewater to either on-site septic systems or deep-well injection systems;
- Perform end-of-pipe treatment and reuse all process wastewater generated on site;

- Perform either in-process or end-of-pipe evaporation to eliminate wastewater discharges; or

- Perform in-process recirculation and recycling to eliminate wastewater discharges.

As discussed in Section 3.0, EPA mailed surveys to 50 statistically selected sites that were using but not discharging process water. Based on those survey responses, five of these sites contract hauled all wastewater generated on site, eight actually discharged process wastewater, 18 had no process wastewater discharges, and 19 were not engaged in MP&M. EPA mailed an additional 24 surveys, selected for technical reasons, to sites which reported not discharging process water on their screener questionnaire. Of these, 14 actually discharged process wastewater, two had no process wastewater discharges, and eight were not engaged in MP&M activities.

In addition to the 20 sites discussed above that do not discharge process wastewater, 205 of the 1996 screener survey respondents reported eliminating wastewater discharge by in-process or end-of-pipe evaporation, end-of-pipe treatment and reuse, in-process recirculation and recycling, or other unspecified means. Figure 4-6 shows the number of sites using each type of zero discharge method. Note that Figure 4-6 provides actual number of survey respondents and not national estimates. EPA discusses the methods used by the 225 sites that have eliminated wastewater discharges below.

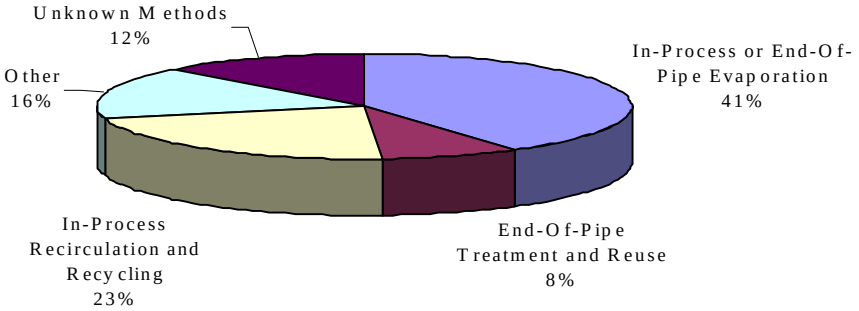

Note: There are 225 survey sites which have eliminated wastewater discharge.

Figure 4-6. Number of Screener Survey Respondents Utilizing Each Zero Discharge Method

In-Process or End-Of-Pipe Evaporation. Ninety-one screener survey respondents reported discharging wastewater to either evaporators, on-site ponds, or lagoons for evaporation of process wastewater. These sites typically performed less than 20 wastewater-discharging unit operations. None of these sites reported recovering the process wastewater. Sludge from the evaporation units was reported as being contract hauled for off-site disposal.

End-Of-Pipe Treatment and Reuse. Nineteen screener survey respondents reported eliminating wastewater discharge through end-of-pipe treatment and reuse of all wastewater generated on site. These sites typically performed less than 13 wastewater-discharging unit operations on site. As discussed in Sections 9.0 and 14.0, EPA considered end-of-pipe ion exchange with reuse of all wastewater generated in developing the MP&M effluent guidelines, but determined that the technology was not appropriate for national effluent guidelines for this industry because its effectiveness and potential metals recovery advantages were generally limited to specific sites and specific metal types and not to the industry as a whole.

In-Process Recirculation and Recycling. Fifty screener survey respondents reported eliminating wastewater discharge through in-process recirculation and recycling. Most of these sites perform fewer than 10 wastewater-generating unit operations; five sites perform between 10 and 20 wastewater-generating unit operations. Several sites perform heat treating operations, in which a stagnant water quench is used and not discharged. Some sites perform surface finishing operations (e.g., alkaline cleaning and chemical conversion coating) in stagnant baths and do not discharge wastewater. Make-up water is added for evaporation. Based on the data from MP&M sites, only sites with few unit operations are typically able to achieve zero discharge solely through in-process recirculation and recycling.

Other. Thirty-seven screener survey respondents reported eliminating wastewater discharge through a variety of other methods including land application and septic systems.

EPA's Underground Injection Control (UIC) Program, authorized by the Safe Drinking Water Act, regulates shallow on-site systems and deep wells that discharge fluids or wastewater into the subsurface and thus may endanger underground sources of drinking water. If a facility disposes any wastewater (other than solely sanitary waste) into a shallow disposal system (e.g., septic system or a floor drain connected to a dry well) that well is covered by the UIC program. If you think you have a UIC disposal well on your facility, you should contact your State UIC Program authority to determine your compliance status.

EPA published the Class V Rule in the Federal Register on December 7, 1999 (64 FR 68545), which affected facilities using on-site systems to dispose waste associated with motor vehicle service and repair in state-designated groundwater protection areas. The EPA is scheduled to develop additional requirements for other Class V wells that receive endangering waste. Contact your State UIC Program for more information on these developing regulations.

4.2 General Discussion of MP&M Processes

This section presents a general discussion of MP&M processes, including the different categories of unit operations, descriptions of the unit operations performed, metal types processed, and wastewater discharge volumes generated.

4.2.1 Types of Unit Operations Performed

MP&M sites perform a wide variety of process unit operations on metal parts, products, and machines. The MP&M regulatory development effort initially focused on 45 unit operations (and their associated rinses) performed at MP&M sites, plus wet air pollution control operations. EPA describes these 46 unit operations in detail in Section 4.2.2. During the regulatory development effort, EPA identified additional unit operations performed at MP&M sites. Section 4.2.2 also lists these additional unit operations.

Each of the MP&M unit operations can be listed under one of the following types:

- Metal shaping operations;
- Surface preparation operations;
- Metal deposition operations;
- Organic deposition operations;
- Surface finishing operations;
- Assembly operations;
- Drydock operations;
- Specialized printed wiring board operations; and
- Unit operations performed at Steel Forming and Finishing sites.

Metal shaping operations are mechanical operations that alter the form of raw materials into intermediate and final products. Surface preparation operations are chemical and mechanical operations that remove unwanted materials from or alter the chemical or physical properties of the surface prior to subsequent MP&M operations. Metal deposition operations apply a metal coating to the part surface by chemical or physical means. Organic deposition operations apply an organic material to the part by chemical or physical means. Sites may perform metal and organic deposition operations to protect the surface from wear or corrosion, modify the electrical properties of the surface, or alter the appearance of the surface. Surface finishing operations protect and seal the surface of the treated part from wear or corrosion by chemical means. Sites may use some surface finishing operations to alter the appearance of the part surface. Assembly operations are performed throughout the manufacturing, rebuilding, or maintenance process. Drydock operations are those MP&M unit operations performed at ship and boat facilities within drydocks or similar structures and incorporate many of the previously described types of MP&M operations. Specialized printed wiring board operations are those specific to the manufacture or rebuilding/maintenance of wiring boards (such as Carbon Black Deposition, Solder Flux Cleaning, and Photo Image Developing). Additional unit operations performed at Steel Forming and Finishing sites are defined in Section 14.1.5. Table 4-2 lists example MP&M unit operations common to each type of operation described above.

Table 4-2

MP&M Unit Operations Listed by Type

Type of Unit Operation	Example Unit Operations Performed
Metal Shaping	Machining, Grinding, Deformation
Surface Preparation	Alkaline Cleaning, Acid Treatment
Metal Deposition	Electroplating, Vapor Deposition
Organic Deposition	Painting
Surface Finishing	Chemical Conversion Coating
Assembly	Testing (e.g. leak testing), Assembly
Specialized Printed Wiring Board	Solder Leveling, Photo Resist Applications
Unit operations performed at Steel Forming and Finishing sites	Mechanical Descaling, Hot Dip Coating

At a given MP&M site, the specific unit operations performed and the sequence of operations depend on many factors, including the activity (i.e., manufacturing, rebuilding/ maintenance), industrial sector, and type of product processed. As a result, MP&M sites perform many different combinations and sequences of unit operations. For example, MP&M sites that repair, rebuild or maintain products often conduct preliminary operations that may not be performed at manufacturing facilities (e.g. disassembly, cleaning, or degreasing to remove dirt and oil accumulated during use of the product). In general, however, MP&M products are processed in the following order:

- The raw material (e.g., bar stock, wire, rod, sheet stock, plates) undergoes some type of metal shaping process, such as impact or pressure deformation, machining, or grinding. In these operations, the raw material is shaped into intermediate forms for further processing or into final forms for assembly and shipment to the customer. Sites typically clean and degrease the parts between some of the shaping operations to remove lubricants, coolants, and metal fines. Sites may also perform heat treating operations between shaping operations to alter the physical characteristics of the part.

- After shaping, the part typically undergoes some type of surface preparation operation, such as alkaline cleaning, acid pickling, or barrel finishing. The specific operation used depends on the subsequent unit operations to be performed and the final use of the products. For example, prior to electroplating, parts typically undergo acid pickling (i.e., acid cleaning) to prepare the surface of the part for electroplating. Before assembly, parts typically undergo alkaline cleaning or barrel finishing.

Parts undergo surface preparation operations at various stages of the production process. Additional cleaning and degreasing steps precede metal deposition, organic deposition, surface finishing, and assembly operations.

- Metal and organic deposition operations typically follow shaping and surface preparation operations, and precede surface finishing and final assembly operations. Electroplating operations typically follow alkaline and acid treatment operations, while painting operations typically follow phosphate conversion coating and alkaline treatment operations.

- Surface finishing operations are typically performed after shaping and surface preparation operations. Some surface finishing operations are performed after metal deposition operations. For example, chromate conversion coating typically follows acid cleaning, although this operation is sometimes performed as a sealant operation after electroplating (e.g. chemical conversion coating of cadmium plated parts). Some surface finishing operations are also performed prior to organic coating operations. For example, phosphate conversion coating frequently precedes painting to enhance the paint adhesion.

- Disassembly operations may be performed as the first step in the rebuilding process. Assembly operations, on the other hand, are performed at many steps of the manufacturing and rebuilding process. Assembly operations prepare the final product. Assembly may also involve some final shaping (e.g., drilling and grinding) and surface preparation (e.g., alkaline cleaning). Final assembly operations are generally the last operations performed prior to shipment to the customer.

Some MP&M sites conduct all of these types of operations in manufacturing or rebuilding products, while others may perform only some types. For example, a site in the hardware sector may start with bar stock and manufacture a final hardware product, performing machining, cleaning, electroplating, conversion coating, painting, degreasing, and assembly operations. Another hardware site may focus on painting the parts, and only perform cleaning and painting operations. A third hardware site may only shape the parts, and perform only machining, cleaning, and degreasing operations.

4.2.2 MP&M Unit Operations and Rinses

This section describes each of the 46 MP&M unit operations listed in Table 4-3 and the wastewater generated from each operation and associated rinse. The following descriptions are included for informational purposes and are not meant to supersede regulatory definitions (e.g., definitions for unit operations that are part of the proposed rule are defined in Section 14 in the applicable subcategory section).

Table 4-3

Typical Unit Operations Performed at MP&M Sites

Unit Operation Name			
1.	Abrasive Blasting	24.	Electroplating without Chromium or Cyanide
2.	Abrasive Jet Machining	25.	Electropolishing
3.	Acid Treatment with Chromium	26.	Floor Cleaning
4.	Acid Treatment without Chromium	27.	Grinding
5.	Alkaline Cleaning for Oil Removal	28.	Heat Treating
6.	Alkaline Treatment with Cyanide	29.	Impact Deformation
7.	Alkaline Treatment without Cyanide	30.	Machining
8.	Anodizing with Chromium	31.	Metal Spraying
9.	Anodizing without Chromium	32.	Painting - Spray or Brush
10.	Aqueous Degreasing	33.	Painting - Immersion
11.	Assembly/Disassembly	34.	Plasma Arc Machining
12.	Barrel Finishing	35.	Polishing
13.	Burnishing	36.	Pressure Deformation
14.	Chemical Conversion Coating without Chromium	37.	Salt Bath Descaling
		38.	Soldering/Brazing
15.	Chemical Milling	39.	Solvent Degreasing
16.	Chromate Conversion Coating	40.	Stripping (paint)
17.	Corrosion Preventive Coating	41.	Stripping (metallic coating)
18.	Electrical Discharge Machining	42.	Testing
19.	Electrochemical Machining	43.	Thermal Cutting
20.	Electroless Plating	44.	Washing Finished Products
21.	Electrolytic Cleaning	45.	Welding
22.	Electroplating with Chromium	46.	Wet Air Pollution Control
23.	Electroplating with Cyanide		

Source: MP&M Survey database.

1 **Abrasive Blasting** involves removing surface films from a workpiece by using abrasive directed at high velocity against the workpiece. Abrasive blasting includes bead, grit, shot, and sand blasting, and may be performed either dry or with water. The primary applications of wet abrasive blasting include: removing burrs on precision parts; producing satin or matte finishes; removing fine tool marks; and removing light mill scale, surface oxide, or welding scale. Wet blasting can be used to finish fragile items such as electronic components. Also, some aluminum parts are wet blasted to achieve a fine-grained matte finish for decorative purposes. With abrasive blasting operations, the water and abrasive are typically reused until the particle size diminishes due to impacting and fracture.

2 **Abrasive Jet Machining** includes removing stock material from a workpiece by a high-speed stream of abrasive particles carried by a liquid or gas from a nozzle. Abrasive jet machining is used for deburring, drilling, and cutting thin sections of metal or composite material. Unlike abrasive blasting, this process operates at

pressures of thousands of pounds per square inch. The liquid streams are typically alkaline or emulsified oil solutions, although water can also be used.

3 **Acid Treatment With Chromium** is a general term used to describe any application of an acid solution containing chromium to a metal surface. Acid cleaning, chemical etching, and pickling are types of acid treatment.

Chromic acid is used occasionally for cleaning cast iron, stainless steel, cadmium and aluminum, and bright dipping of copper and copper alloys. Also, chromic acid solutions can be used as final steps in acid cleaning phosphate conversion coating systems.

For chemical conversion coatings formulated with chromic acid, see unit operation 16.

Wastewater generated from acid treatment includes spent solutions and rinse waters. Spent solutions are typically batch discharged and treated or disposed of off site. Most acid treatment operations are followed by a water rinse to remove residual acid.

4 **Acid Treatment Without Chromium** is a general term used to describe any application of an acid solution, not containing chromium, to a metal surface. Acid cleaning, chemical etching, and pickling are types of acid treatment.

Wastewater generated from acid treatment includes spent solutions and rinse waters. Spent solutions are typically batch discharged and treated or disposed of off site. Most acid treatment operations are followed by a water rinse to remove residual acid.

5 **Alkaline Cleaning for Oil Removal** is a general term for the application of an alkaline cleaning agent to a metal part to remove oil and grease during the manufacture, maintenance, or rebuilding of a metal product.

This unit operation does not include the washing of finished products after routine use (see unit operation 44), or the application of an alkaline cleaning agent to remove nonoily contaminants such as dirt and scale (see unit operations 6 and 7). Wastewater generated from this operation includes spent cleaning solutions and rinse waters.

- **Alkaline cleaning** is performed to remove foreign contaminants from parts. This process is commonly applied prior to finishing operations, such as electroplating.

- **Emulsion cleaning** is an alkaline treatment (typically performed in the pH range of 7 to 9) that uses either complex chemical enzymes or common organic solvents (e.g., kerosene, mineral oil, glycols, and benzene) dispersed in water with the aid of an emulsifying agent. Depending on the solvent used, cleaning is performed at temperatures from room temperature to 82EC (180EF). The process is often used as a replacement for vapor degreasing.

6 **Alkaline Treatment With Cyanide** is a general term used to describe the application of an alkaline solution containing cyanide to a metal surface to clean it.

Wastewater generated from alkaline treatment includes spent solutions and rinse waters. Alkaline treatment solutions become contaminated during use from the introduction of soils and/or dissolution of the base metal, and they are typically batch discharged for treatment or disposal. Alkaline treatment operations are typically followed by a water rinse that is discharged to treatment. EPA does not consider the washing of finished products after routine use to be part of this unit operation, but instead classifies this as unit operation 44, washing of finished products.

7 **Alkaline Treatment Without Cyanide** is a general term used to describe the application of an alkaline solution, not containing cyanide, to a metal surface to clean the metal surface or prepare the metal surface for further surface finishing. Alkaline treatment includes alkaline cleaning and emulsion cleaning as described under unit operation 5.

8 **Anodizing With Chromium** involves producing a protective oxide film on aluminum, magnesium, or other light metal, usually by passing an electric current through an electrolyte bath in which the metal is immersed. Anodizing may be followed by a sealant operation.

Chromic acid anodic coatings have a relatively thick boundary layer and are more protective than sulfuric acid coatings. For these reasons, chromic acid is sometimes used when the part cannot be completely rinsed. These oxide coatings provide corrosion protection, decorative surfaces, a base for painting and other coating processes, and special electrical and mechanical properties.

Wastewater generated from anodizing includes spent anodizing solutions, sealants, and rinse waters. Because of the anodic nature of the process, anodizing solutions become contaminated with the base metal being processed. These solutions eventually reach an intolerable concentration of dissolved metal and require treatment or disposal. Rinse water following anodizing, coloring, and sealing steps is typically discharged to treatment.

9 **Anodizing Without Chromium** involves producing of a protective oxide film on aluminum, magnesium, or other light metal, usually by passing an electric current through an electrolyte bath in which the metal is immersed. Phosphoric acid, sulfuric acid, and boric acid, are all types of anodizing. Anodizing may also include sealant baths. These oxide coatings provide corrosion protection, decorative surfaces, a base for painting and other coating processes, and special electrical and mechanical properties.

Wastewater generated from anodizing includes spent anodizing solutions, sealants, and rinse waters. Because of the anodic nature of the process, anodizing solutions become contaminated with the base metal being processed. These solutions eventually reach an intolerable concentration of dissolved metal and require treatment or disposal. Rinse water following anodizing, coloring, and sealing steps typically discharged to treatment.

10 **Aqueous Degreasing** involves cleaning metal parts using aqueous-based cleaning chemicals primarily to remove residual oils and greases from a part. Residual oils can be from previous operations (e.g., machine coolants), oil from product use in a dirty environment, or oil coatings intended to inhibit corrosion. Wastewater generated by this operation includes spent cleaning solutions and rinse waters.

11 **Assembly/Disassembly** involves fitting together previously manufactured or rebuilt parts or components into a complete metal product or machine or taking a complete metal product or machine apart. Assembly/disassembly operations are typically dry; however, special circumstances can require water for cooling or buoyancy. Also, rinsing may be necessary under some conditions.

12 **Barrel Finishing (i.e., tumbling, mass finishing**) involves polishing or deburring a workpiece using a rotating or vibrating container and abrasive media or other polishing materials to achieve a desired surface appearance. Parts to be finished are placed in a rotating barrel or vibrating unit with an abrasive media (e.g., ceramic chips, pebbles), water, and chemical additives (e.g., alkaline detergents). As the barrel rotates, the upper layer of the part slides toward the lower side of the barrel, causing the abrading or polishing. Similar results can also be accomplished in a vibrating unit, where the entire contents of the container are in constant motion, or in a centrifugal unit, which compacts the load of media and parts as the unit spins and generates up to 50 times the force of gravity. Spindle finishing is a similar process, where parts to be finished are mounted on fixtures and exposed to a rapidly moving abrasive slurry.

Wastewater generated by barrel finishing includes spent process solutions and rinses. Following the finishing process, the contents of the barrel are unloaded. Process wastewater is either discharged continuously during the process,

discharged after finishing, or collected and reused. The parts are sometimes given a final rinse to remove particles of abrasive media from part surfaces.

13 **Burnishing** involves finish sizing or smooth finishing a workpiece (previously machined or ground) by displacing, rather than removing, minute surface irregularities with smooth point or line-contact, fixed or rotating tools. Lubricants or soap solutions can be used to cool tools used in burnishing operations. Wastewater is generated from burnishing operations through process solution discharges and rinsing.

14 **Chemical Conversion Coating without Chromium** is the process of applying a protective coating on the surface of a metal without using chromium. Such coatings include metal phosphates, metal coloring, passivation, or other coatings. These coatings are applied to a base metal or previously deposited metal to increase corrosion protection and lubricity, prepare the surface for additional coatings, or formulate a special surface appearance. This unit operation includes sealant operations using additives other than chromium.

- **Phosphate conversion coatings** are applied for one or more of the following reasons: to provide a base for paints and other organic coatings; to condition surfaces for cold forming operations by providing a base for drawing compounds and lubricants; to impart corrosion resistance to the metal surface; or to provide a suitable base for corrosion-resistant oils or waxes. Phosphate conversion coatings are formed by immersing a metal part in a dilute solution of phosphoric acid, phosphate salts, and other reagents.

- **Metal coloring** by chemical conversion coating produces a large group of decorative finishes. Metal coloring includes the formation of oxide conversion coatings. In this operation, the metal surface is converted into an oxide or similar metallic compound, giving the part the desired color. The most common colored finishes are used on copper, steel, zinc, and cadmium.

- **Passivation** forms a protective film on metals, particularly stainless steel, by immersing parts in an acid solution. Stainless steel is passivated to dissolve embedded iron particles and to form a thin oxide film on the surface of the metal.

Wastewater generated by chemical conversion coating operations includes spent process solutions and rinses (i.e., both the chemical conversion coating solutions and post-treatment sealant solutions). These solutions are commonly discharged to treatment when contaminated with the base metal or other impurities. Rinsing

normally follows each process step, except after some sealants, which dry on the part surface.

15 **Chemical Milling (or Chemical Machining)** involves removing metal from a workpiece by controlled chemical attack, or etching, to produce desired shapes and dimensions. In chemical machining, a masking agent is typically applied to cover a portion of the part's surface; the exposed (unmasked) surface is then treated with the chemical machining solution.

Wastewater generated by chemical machining operations includes spent process solutions and rinses. Process solutions are commonly discharged after becoming contaminated with the base metal. Rinsing normally follows chemical machining.

16 **Chromate Conversion Coating (or chromating)** involves forming a conversion coating (protective coating) on a metal by immersing or spraying the metal with a hexavalent chromium compound solution to produce a hexavalent and/or trivalent chromium compound coating. This is also known as chromate treatment, and is most often applied to aluminum, zinc, cadmium or magnesium surfaces. Sealant operations using chromium are also included in this unit operation.

Chromate solutions include two types: (1) those that deposit substantial chromate films on the substrate metal and are complete treatments themselves, and (2) those that seal or supplement oxide, phosphate, or other types of protective coatings.

Wastewater generated by chromate conversion coating operations includes spent process solutions (i.e., both the chromate conversion coating solutions and post-treatment sealant solutions) and rinses. These solutions are commonly discharged to treatment when contaminated with the base metal or other impurities. Also, chromium-based solutions, which are typically formulated with hexavalent chromium, lose operating strength when the hexavalent chromium reduces to trivalent chromium during use. Rinsing normally follows each process step, except after some sealants, which dry on the surface of the part.

17 **Corrosion Preventive Coating** involves applying removable oily or organic solutions to protect metal surfaces against corrosive environments. Corrosion preventive coatings include, but are not limited to: petrolatum compounds, oils, hard dry-film compounds, solvent-cutback petroleum-based compounds, emulsions, water-displacing polar compounds, and fingerprint removers and neutralizers. Corrosion preventive coating does not include electroplating or chemical conversion coating (including phosphate conversion coating) operations.

Many corrosion preventive materials are also formulated to function as lubricants or as a base for paint. Typical applications include: assembled machinery or equipment in standby storage; finished parts in stock or spare parts for

replacement; tools such as drills, taps, dies, and gauges; and mill products such as sheet, strip, rod and bar.

Wastewater generated from corrosion preventive coating operations includes spent process solutions and rinses. Process solutions are discharged when they become contaminated with impurities or are depleted of constituents. Corrosion preventive coatings do not typically require an associated rinse, but parts are sometimes rinsed to remove the coating before further processing.

18 **Electrical Discharge Machining** involves removing metals by a rapid spark discharge between different polarity electrodes, one the workpiece and the other the tool, separated by a small gap. The gap may be filled with air or a dielectric fluid. This operation is used primarily to cut tool alloys, hard nonferrous alloys, and other hard-to-machine materials. Most electrical discharge machining processes are operated dry. In some cases, water is used in the process, which generates wastewater of water-based dielectric fluids.

19 **Electrochemical Machining** is a process in which the workpiece becomes the anode and a shaped cathode is the cutting tool. By pumping electrolyte between the electrodes and applying a potential, metal is rapidly but selectively dissolved from the workpiece. Wastewater generated by electrochemical machining includes spent electrolytes and rinses.

20 **Electroless Plating** involves deposition of a metallic coating by a controlled chemical reduction that is catalyzed by the substitute material being deposited without using an electrical current. The metal to be plated onto a part is typically held in solution at high concentrations by the use of a chelating agent. This operation plates all areas of the part to a uniform thickness regardless of the configuration of the part. Also, an electroless-plated surface is dense and virtually nonporous. Copper and nickel electroless plating are the most common.

Sealant operations (i.e., other than hot water dips) performed following this operation are considered separate unit operations if they include any additives.

Wastewater generated from electroless plating operations includes spent process solutions and rinses. This wastewater contain chelated metals, which require separate preliminary treatment to break the metal chelates prior to conventional chemical precipitation. Rinsing follows most electroless plating processes to remove residual plating solution and prevent contamination of subsequent process baths.

21 **Electrolytic Cleaning** involves removing soil, scale, or surface oxides from a workpiece by electrolysis. The workpiece is one of the electrodes and the

electrolyte is usually alkaline. Electrolytic alkaline cleaning and electrolytic acid cleaning are the two types of electrolytic cleaning. They are described below.

- **Electrolytic alkaline cleaning** produces a cleaner surface than nonelectrolytic methods of alkaline cleaning. This method uses strong agitation, gas evolution in the solution, and oxidation-reduction reactions that occur during electrolysis. In addition, dirt particles become electrically charged and are repelled from the part surface.

- **Electrolytic acid cleaning** is sometimes used as a final cleaning before electroplating. Sulfuric acid is most frequently used as the electrolyte. As with electrolytic alkaline cleaning, the mechanical scrubbing effect from the evolution of gas enhances the effectiveness of the process.

Wastewater generated from electrolytic cleaning operations includes spent process solutions and rinses. Electrolytic cleaning solutions become contaminated during use due to the base metal dissolving and the introduction of contaminants. The solution is typically batch discharged for treatment or disposal after it weakens. Following electrolytic cleaning, rinsing is used to remove residual cleaner and prevent the contamination of subsequent process baths.

22 **Electroplating with Chromium** involves producing a chromium metal coating on a surface by electrodeposition. Electroplating provides corrosion protection, wear or erosion resistance, lubricity, electrical conductivity, or decoration.

In electroplating, metal ions in acid, alkaline, or neutral solutions are reduced on the cathodic surfaces of the parts being plated. Metal salts or oxides are typically added to replenish solutions. Chromium trioxide is often added as a source of chromium.

In addition to water and the metal being deposited, electroplating solutions often contain agents that form complexes with the metal being deposited, stabilizers to prevent hydrolysis, buffers for pH control, catalysts to assist in deposition, chemical aids to dissolve anodes, and miscellaneous ingredients that modify the process to attain specific properties. Sealant operations (i.e., other than hot water dips) performed after this operation are considered separate unit operations if they include any additives.

Wastewater generated from electroplating operations includes spent process solutions and rinses. Electroplating solutions occasionally become contaminated during use due to the base metal dissolving and/or the introduction of other contaminants. As this happens, the performance of the electroplating solutions diminishes. Spent concentrated solutions are typically treated for contaminant removal and reused, processed in a wastewater treatment system, or sent off site

for disposal. Rinse waters, including some drag-out rinse tank solutions, are typically treated on site.

23 **Electroplating with Cyanide** involves producing metal coatings on a surface by electrodeposition, using cyanide. Electroplating provides corrosion protection, wear or erosion resistance, lubricity, electrical conductivity, or decoration.

In electroplating, metal ions in acid, alkaline, or neutral solutions are reduced on the cathodic surfaces of the parts being plated. The metal ions in solution are typically replenished by dissolving metal from anodes contained in inert wire or metal baskets. Sealant operations performed after this operation are considered separate unit operations if they include any additives (i.e., any sealant operations other than hot water dips).

In addition to water and the metal being deposited, electroplating solutions often contain agents that form complexes with the metal being deposited, stabilizers to prevent hydrolysis, buffers for pH control, catalysts to assist in deposition, chemical aids for dissolving anodes, and miscellaneous ingredients that modify the process to attain specific properties. Cyanide, usually in the form of sodium or potassium cyanide, is frequently used as a complexing agent for zinc, cadmium, copper, and precious metal baths.

Wastewater generated from electroplating operations includes spent process solutions and rinses. Electroplating solutions occasionally become contaminated during use due to dissolution of the base metal and/or the introduction of other contaminants. As this happens, the performance of the electroplating solutions diminishes. Spent concentrated solutions are typically treated for contaminant removal and reused, processed in a wastewater treatment system, or sent off site for disposal. Rinse waters, including some drag-out rinse tank solutions, are typically treated on site.

24 **Electroplating without Chromium or Cyanide** involves the production of metal coatings on a surface by electrodeposition, without the use of chromium or cyanide. Commonly electroplated metals include nickel, copper, tin/lead, gold, and zinc. Electroplating is performed to provide corrosion protection, wear or erosion resistance, lubricity, electrical conductivity, or decoration.

In electroplating, metal ions in acid, alkaline, or neutral solutions are reduced on the cathodic surfaces of the parts being plated. The metal ions in solution are typically replenished by dissolving metal from anodes contained in inert wire or metal baskets. Sealant operations performed after this operation are considered separate unit operations if they include any additives (i.e., any sealant operations other than hot water dips).

In addition to water and the metal being deposited, electroplating solutions often contain agents that form complexes with the metal being deposited, stabilizers to prevent hydrolysis, buffers for pH control, catalysts to assist in deposition, chemical aids for dissolving anodes, and miscellaneous ingredients that modify the process to attain specific properties.

Wastewater generated from electroplating operations includes spent process solutions and rinses. Electroplating solutions occasionally become contaminated during use due to dissolution of the base metal and/or the introduction of other contaminants. As this happens, the performance of the electroplating solutions diminishes. Spent concentrated solutions are typically treated for contaminant removal and reused, processed in a wastewater treatment system, or sent off site for disposal. Rinse waters, including some drag-out rinse tank solutions, are typically treated on site.

25 **Electropolishing** involves producing a highly polished surface on a workpiece using reversed electrodeposition in which the anode (workpiece) releases some metal ions into the electrolyte to reduce surface roughness. When current is applied, a polarized film forms on the metal surface, through which metal ions diffuse. In this process, areas of surface roughness on parts serve as high-current density areas and are dissolved at rates greater than the smoother portions of the metal surface.

Metals are electropolished to improve appearance, reflectivity, and corrosion resistance. Base metals processed by electropolishing include aluminum, copper, zinc, low-alloy steel, and stainless steel. Common electrolytes include sodium hydroxide and combinations of sulfuric acid, phosphoric acid, and chromic acid.

Wastewater generated from electropolishing operations includes spent process solutions and rinses. Eventually, the concentration of dissolved metals increases beyond tolerable levels and the process becomes ineffective. Typically, a portion of the bath is decanted and some fresh chemicals are added, or the entire solution is discharged to treatment and replaced with fresh chemicals. Rinsing can involve several steps and can include hot immersion or spray rinses.

26 **Floor Cleaning (in process area)** removes dirt, debris, process solution spills, etc., from process area floors. Floors can be cleaned using wet or dry methods, such as vacuuming, mopping, dry sweeping, and hose rinsing. Nonprocess area floor cleaning in offices and other areas is not included in this unit operation.

27 **Grinding** involves removing stock from a workpiece by using abrasive grains held by a rigid or semirigid binder. Grinding shapes or deburrs the workpiece.

The grinding tool is usually a disk (the basic shape of grinding wheels), but can also be a cylinder, ring, cup, stick, strip, or belt. The most commonly used abrasives are aluminum oxide, silicon carbide, and diamond. The process may use a grinding fluid to cool the part and remove debris or metal fines.

Wastewater generated from grinding operations includes spent coolants and rinses. Metal-working fluids become spent for a number of reasons, including increased biological activity (i.e., the fluids become rancid) or decomposition of the coolant additives. Rinse waters are typically assimilated into the working fluid or treated on site.

28 **Heat Treating** involves modifying the physical properties of a workpiece by applying controlled heating and cooling cycles. This operation includes tempering, carburizing, cyaniding, nitriding, annealing, aging, normalizing, austenitizing, austempering, siliconizing, martempering, and malleablizing. Parts are heated in furnaces or molten salt baths, and then may be cooled by quenching in aqueous solutions (e.g., brine solutions), neat oils (pure oils with little or no impurities), or oil/water emulsions. Heat treating is typically a dry operation. It is considered a wet operation if aqueous quenching solutions are used. Wastewater can be generated from spent quench water and rinses.

29 **Impact Deformation** involves applying impact force to a workpiece to permanently deform or shape it. Impact deformation may include mechanical operations such as hammer forging, shot peening, peening, coining, high-energy-rate forming, heading, or stamping.

Impact deformation operations use natural and synthetic oils, light greases, and pigmented lubricants. Pigmented lubricants include whiting, lithapone, mica, zinc oxide, molybdenum disulfide, bentonite, flour, graphite, white lead, and soap-like materials.

These operations are typically dry, but wastewater can be generated from lubricant discharge and from rinsing operations associated with the process.

30 **Machining** involves removing stock from a workpiece (as chips) by forcing a cutting tool against the workpiece. This definition includes machining operations such as turning, milling, drilling, boring, tapping, planing, broaching, sawing, cutoff, shaving, shearing, threading, reaming, shaping, slotting, hobbing, and chamfering. Machining operations use various types of metal working fluids, the choice of which depends on the type of machining being performed and the preference of the machine shop. The fluids can be categorized into four groups: straight oil (neat oils), synthetic, semisynthetic, and water-soluble oil.

Machining operations generate wastewater from working fluid or rinse water discharge. Metal working fluids are periodically discarded because of reduced performance or development of a rancid odor. After machining, parts are sometimes rinsed to remove coolant and metal chips. The coolant reservoir is sometimes rinsed, and the rinse water is added to the working fluid.

31 **Metal Spraying (including water curtain)** involves applying a metallic coating to a workpiece by projecting molten or semimolten metal particles onto a substrate. Coatings can be sprayed from rod or wire stock or from powdered material. The process involves feeding the material (e.g., wire) into a flame where it is melted. The molten stock is then stripped from the end of the wire and atomized by a high-velocity stream of compressed air or other gas, which propels the material onto a prepared substrate or part.

Metal spraying coatings are used in a wide range of special applications, including: insulating layers in applications such as induction heating coils; electromagnetic interference shielding; thermal barriers for rocket engines; nuclear moderators; films for hot isostatic pressing; and dimensional restoration of worn parts.

Metal spraying is sometimes performed in front of a “water curtain” (a circulated water stream used to trap overspray) or a dry filter exhaust hood that captures the overspray and fumes. With water curtain systems, water is recirculated from a sump or tank. Wastewater is generated when the sump or tank is periodically discharged. Metal spraying is not typically followed by rinsing.

32 **Painting-Spray or Brush (including water curtains)** involves applying an organic coating to a workpiece. The application of coatings such as paint, varnish, lacquer, shellac and plastics uses processes such as spraying, brushing, roll coating, lithographing, powder coating, and wiping.

Water is used in painting operations as a solvent (water-borne formulations) for rinsing, for cleanup, and for water-wash (or curtain) type spray booths. Paint spray booths typically use most of the water in this unit operation. Spray booths capture overspray (i.e., paint that misses the product during application), and control the introduction of contaminants to the workplace and environment.

33 **Painting-Immersion (including electrophoretic, “e-coat”)** involves applying an organic coating to a workpiece using technology-based processes such autophoretic and electrophoretic painting, described below.

- **Autophoretic Painting** is the application by nonelectrophoresis of an organic paint film when a workpiece is immersed in a suitable aqueous bath.

- **Electrophoretic Painting** is coating a workpiece by making it either anodic or cathodic in a bath that is generally an aqueous emulsion of the organic coating material.

- **Other Immersion Painting** includes all other types of immersion painting such as dip painting.

Water is used in immersion paint operations as a carrier for paint particles and to rinse the part. Aqueous painting solutions and rinses are typically treated through an ultrafiltration system. The concentrate is returned to the painting solution, and the permeate is reused as rinse water. Sites typically discharge a bleed stream to treatment. The painting solution and rinses are periodically batch-discharged to treatment.

34 **Plasma Arc Machining** involves material removal or shaping of a workpiece by a high-velocity jet of high-temperature, ionized gas. In plasma arc machining, a gas (nitrogen, argon, or hydrogen) is passed through an electric arc, causing the gas to become ionized, and heated to temperatures exceeding 16,650EC (30,000EF). The relatively narrow plasma jet melts and displaces the material in its path. Because plasma machining does not depend on a chemical reaction between the gas and the part, and because plasma temperatures are extremely high, the process can be used on almost any metal, including those that are resistant to oxygen-fuel gas cutting. The method is used mainly for profile cutting of stainless steel and aluminum alloys.

Although plasma arc machining is typically a dry process, water is used for water injection plasma arc torches. In these cases, a constricted swirling flow of water surrounds the cutting arc. This operation may also be performed immersed in a water bath. In both cases, the water is used to stabilize the arc, to cool the part, and to contain smoke and fumes.

35 **Polishing** involves removing stock from a workpiece by the action of loose or loosely held abrasive grains carried to the workpiece by a flexible support. Usually, the amount of stock removed in a polishing operation is only incidental to achieving a desired surface finish or appearance. Buffing is included in the polishing unit operation. It is usually performed using a revolving cloth or sisal buffing wheel, which is coated with a suitable compound. Liquid buffing compounds are used extensively for large-volume production on semiautomated or automated buffing equipment. Polishing operations are typically dry, although some operations are performed with liquid compounds or associated rinses.

36 **Pressure Deformation** involves applying force (other than impact force) to permanently deform or shape a workpiece. Pressure deformation operations may

include operations such as rolling, drawing, bending, embossing, sizing, extruding, squeezing, spinning, necking, forming, crimping or flaring.

Natural and synthetic oils, light greases, and pigmented lubricants are used in pressure deformation operations. Pigmented lubricants include whiting, lithapone, mica, zinc oxide, molybdenum disulfide, bentonite, flour, graphite, white lead, and soap-like materials.

Pressure deformation is typically dry, but wastewater is sometimes generated from the discharge of lubricants or from rinsing operations associated with the process.

37 **Salt Bath Descaling** involves removing surface oxides or scale from a workpiece by immersion of the workpiece in a molten salt bath or hot salt solution. Salt bath descaling solutions can contain molten salts, caustic soda, sodium hydride, and chemical additives. Molten salt baths are used in a salt bath-water quench-acid dip sequence to remove oxides from stainless steel and other corrosion-resistant alloys. In this process, the part is typically immersed in the molten salt, quenched with water, and then dipped in acid. Oxidizing, reducing, or electrolytic salt baths can be used depending upon the oxide to be removed. Wastewater generated from salt bath descaling operations includes spent process solutions, quenches, and rinses.

38 **Soldering** involves joining metals by inserting a thin (capillary thickness) layer of nonferrous filler metal into the space between them. Bonding results from the intimate contact produced by the metallic bond formed between the substrate metal and the solder alloy. The term soldering is used where the melting temperature of the filler is below 425EC (800EF). Some soldering operations use a solder flux, which is an aqueous or nonaqueous material used to dissolve, remove, or prevent the formation of surface oxides on the part.

Except for the use of aqueous fluxes, soldering is typically a dry operation; however, a quench or rinse sometimes follows soldering to cool the part or remove excess flux or other foreign material from its surface. Recent developments in soldering technology have focused on fluxless solders and fluxes that can be cleaned off with water.

39 **Solvent Degreasing** removes oils and grease from the surface of a part by using organic solvents, including aliphatic petroleum (e.g., kerosene, naphtha), aromatics (e.g., benzene, toluene), oxygenated hydrocarbons (e.g., ketones, alcohol, ether), and halogenated hydrocarbons (e.g., 1,1,1-trichloroethane, trichloroethylene, methylene chloride).

Solvent cleaning can be accomplished in either the liquid or vapor phase. Solvent vapor degreasing is normally quicker than solvent liquid degreasing. However,

ultrasonic vibration is sometimes used with liquid solvents to decrease the required immersion time with complex shapes. Solvent cleaning is often used as a precleaning operation prior to alkaline cleaning, as a final cleaning of precision parts, or as a surface preparation for some painting operations. Solvent degreasing operations are typically not followed by rinsing, although rinsing is performed in some cases.

40 **Stripping (paint)** involves removal of a paint (or other organic) coating from a metal basis material. Stripping is commonly performed as part of the manufacturing process to recover parts that have been improperly coated or as a part of maintenance and rebuilding to restore parts to a usable condition.

Organic coatings (including paint) are stripped using thermal, mechanical, and chemical means. Thermal methods include burn-off ovens, fluidized beds of sand, and molten salt baths. Mechanical methods include scraping and abrasive blasting (see unit operation 1). Chemical paint strippers include alkali solutions, acid solutions, and solvents (e.g., methylene chloride).

Wastewater generated from organic coating stripping operations includes process solutions (limited mostly to chemical paint strippers and rinses).

41 **Stripping (metallic coating)** involves removing a metallic coating from a metal basis material. Stripping is commonly performed as part of the manufacturing process to recover parts that have been improperly coated or as a part of maintenance and rebuilding to restore parts to a usable condition.

Metallic coating stripping most often uses chemical baths, although mechanical means (e.g., grinding, abrasive blasting) are also used. Chemical stripping is frequently performed as an aqueous electrolytic process.

Wastewater generated from metallic coating stripping operations includes process solutions and rinses. Stripping solutions become contaminated due to dissolution of the base metal. Typically, the entire solution is discharged to treatment. Rinsing is used to remove the corrosive film remaining on the parts.

42 **Testing** involves application of thermal, electrical, mechanical, hydraulic, or other energy to determine the suitability or functionality of a part, assembly or complete unit. Testing may also include the application of surface penetrant dyes to detect surface imperfections. Other types of tests frequently performed, which are typically dry but may generate wastewater under certain circumstances, include electrical testing, performance testing, X-ray testing, and ultrasonic testing. Testing is usually performed to replicate some aspect of the working environment. Wastewater generated from testing operations includes spent process solutions and rinses.

43 **Thermal Cutting** involves cutting, slotting or piercing a workpiece using an oxy-acetylene oxygen lance, electric arc cutting tool, or laser. Thermal cutting is typically a dry process, except for the use of contact cooling waters and rinses.

44 **Washing (finished products)** involves the cleaning of finished metal products after use or storage. This includes the use of fresh water or water containing a mild cleaning solution. This unit operation applies only to the finished products that do not require maintenance or rebuilding.

45 **Welding** involves joining two or more pieces of material by applying heat, pressure, or both, with or without filler material, to produce a metallurgical bond through fusion or recrystallization across the interface. Included in this definition are gas welding, resistance welding, arc welding, cold welding, electron beam welding, and laser beam welding. Welding is typically a dry process, except for the occasional use of contact cooling waters or rinses.

46 **Wet Air Pollution Control** involves the use of water to remove chemicals, fumes, or dusts that are entrained in air streams exhausted from process tanks or production areas. Most frequently, wet air pollution control devices are applied to electroplating, cleaning, and coating processes. A common type of wet air pollution control is the wet packed scrubber consisting of a spray chamber that is filled with packing material. Water is continuously sprayed onto the packing and the air stream is pulled through the packing by a fan. Contaminants in the air stream are absorbed by the water droplets and the air is released to the atmosphere. A single scrubber often serves numerous process tanks; however, the air streams are typically segregated by source into chromium, cyanide, and acid/alkaline sources.

Table 4-4 lists the less common unit operations identified from MP&M detailed surveys. Descriptions of these unit operations are contained in the public record for this rulemaking. Wastewater discharge flow from these operations represents less than 3 percent of the industry flow. Descriptions of unit operations applicable to the Steel Forming and Finishing Subcategory are listed in Section 14.1.5.

Table 4-4

Additional Water-Using Unit Operations Performed at MP&M Sites

Unit Operation Name [a]	Number of Facilities Performing Unit Operation	Unit Operation Name [a]	Number of Facilities Performing Unit Operation
Acid Pickling Neutralization	35	Mechanical Plating	127
Adhesive Bonding	101	Multiple Unit Operation Rinse	462
Bilge Water	13	Phosphor Deposition	7
Calibration	33	Photo Image Developing	688
Carbon Black Deposition	73	Photo Imaging	7
Chromium Drag-out Reduction	6	Photo Resist Applications	20
Cyanide Rinsing	13	Solder Flux Cleaning	248
Dry Dock/Stormwater	21	Solder Fusing	144
Galvanizing/Hot Dip Coating	93	Steam Cleaning	22
Hot Dip Coating	63	Thermal Infusion	37
Kerfing	15	Vacuum Impregnation	51
Laundering	75	Water Shedder	12

Source: MP&M Survey database.
[a] EPA identified these unit operations based on responses to the 1989 and 1996 detailed survey mailouts.

4.2.3 Metal Types Processed

MP&M sites perform unit operations on a variety of metal types. Survey results identified 29 different metal types that are processed at MP&M sites. Of these, iron, aluminum, and copper are the base metals most frequently processed. Nickel, tin, lead, gold, and zinc are frequently processed as metals electroplated onto base metals.

Many MP&M sites also process more than one metal type on site. Figure 4-7 shows the percent of wastewater-discharging sites by number of metal types processed. As shown in Figure 4-7, more than half of the wastewater-discharging MP&M sites process more than one metal type on site.

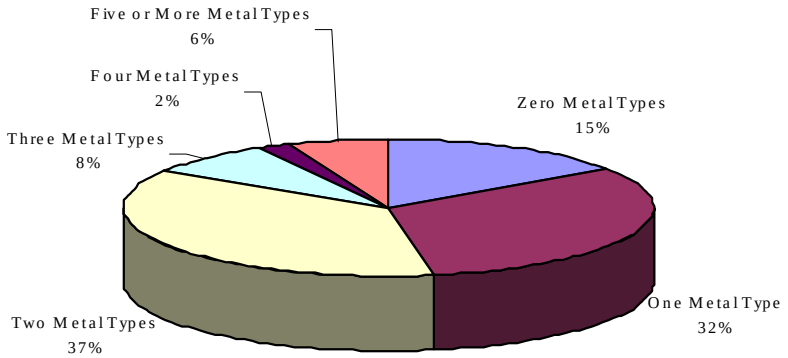

Source: MP&M Survey Database.
Note: There are 62,749 wastewater - discharging MP&M sites. Zero metal types represent sites discharging process water only from floor cleaning of the metals processing area.

Figure 4-7. Number of MP&M Wastewater-Discharging Sites by Number of Metal Types Processed

4.2.4 Wastewater Discharge Volumes Generated

Process wastewater is used in many of the unit operations listed in Section 4.2.2. Some operations may be performed with and without water (wet or dry) depending on the purpose of the operation, raw materials, and final product use. For example, some machining operations (e.g., drilling) can often be performed without a coolant, while other machining operations (e.g., milling) typically require a coolant. Process wastewater may be recirculated, recycled or reused by one of the zero-wastewater-discharge methods described in Section 4.1.4, however, process wastewater is generally discharged to treatment or disposal.

Based on survey results, the most commonly performed wet unit operations are floor cleaning and acid treatment. Survey results also show the most commonly performed unit operations are not the ones generating the largest volumes of wastewater. Of the wastewater discharged, 79 percent is generated from associated rinses, with chemical conversion coating rinsing, acid treatment rinsing, and alkaline treatment rinsing generating the most wastewater. Table 4-5 summarizes which operations are typically performed without water, the number of MP&M sites that discharge process wastewater from each unit operation, and the total industry discharge flow from each unit operation.

Table 4-5

Number of MP&M Sites Discharging Process Wastewater by Unit Operation and Flow[a]

Survey Unit Operation Number	Unit Operation Description	Typically Performed Dry	Estimated Number of MP&M Sites Discharging Wastewater from Unit Operation	Total Estimated Industry Discharge Flow from Unit Operation[b] (gpy)
1	Abrasive Blasting	T	609	38,778,160
1R.	Abrasive Blasting Rinse		667	305,528,295
2	Abrasive Jet Machining	T	1,072	39,977,953
3	Acid Treatment With Chromium		351	4,086,562
3R.	Acid Treatment With Chromium Rinse		429	364,766,772
4	Acid Treatment Without Chromium		5,690	416,840,116
4R.	Acid Treatment Without Chromium Rinse		6,574	17,754,706,129
5	Alkaline Cleaning for Oil Removal		6,253	1,401,562,927
5R.	Alkaline Cleaning for Oil Removal Rinse		4,400	8,625,499,609
6	Alkaline Treatment With Cyanide		204	4,729,476
6R.	Alkaline Treatment With Cyanide Rinse		252	74,087,698
7	Alkaline Treatment Without Cyanide		5,667	556,356,897
7R.	Alkaline Treatment Without Cyanide Rinse		4,185	7,906,960,561
8	Anodizing With Chromium		183	398,976
8R.	Anodizing With Chromium Rinse		194	205,226,036
9	Anodizing Without Chromium		577	12,858,977
9R.	Anodizing Without Chromium Rinse		678	4,120,542,720
10	Aqueous Degreasing		19,148	637,940,485
10R.	Aqueous Degreasing Rinse		13,718	631,789,542
11	Assembly/Disassembly	T	960	62,328,594
11R.	Assembly/Disassembly Rinse		836	2,086,711
12	Barrel Finishing		6,639	1,481,495,528
12R.	Barrel Finishing Rinse		2,820	596,393,341
13	Burnishing		2,311	137,710,275
13R.	Burnishing Rinse		1,447	333,474,479

Table 4-5 (Continued)

Survey Unit Operation Number	Unit Operation Description	Typically Performed Dry	Estimated Number of MP&M Sites Discharging Wastewater from Unit Operation	Total Estimated Industry Discharge Flow from Unit Operation[b] (gpy)
14	Chemical Conversion Coating Without Chromium		4,387	1,231,117,839
14R.	Chemical Conversion Coating Without Chromium Rinse		4,815	25,297,218,112
15	Chemical Milling		726	43,500,663
15R.	Chemical Milling Rinse		1,258	1,095,828,156
16	Chromate Conversion Coating		1,900	73,476,786
16R.	Chromate Conversion Coating Rinse		2,115	2,146,579,879
17	Corrosion Preventive Coating	T	924	69,973,819
17R.	Corrosion Preventive Coating Rinse		463	686,365,140
18	Electrical Discharge Machining		729	1,714,162
18R	Electrical Discharge Machining Rinse		279	3,368,478
19	Electrochemical Machining		189	349,183,003
19R.	Electrochemical Machining Rinse		165	43,572,599
20	Electroless Plating		1,256	18,175,581
20R.	Electroless Plating Rinse		1,646	665,900,951
21	Electrolytic Cleaning		2,405	83,645,332
21R.	Electrolytic Cleaning Rinse		2,771	3,346,961,012
22	Electroplating With Chromium		557	30,135,241
22R.	Electroplating With Chromium Rinse		825	1,543,347,451
23	Electroplating With Cyanide		731	87,597,962
23R.	Electroplating With Cyanide Rinse		3,185	856,518,170
24	Electroplating Without Chromium or Cyanide		1,866	54,401,114
24R.	Electroplating Without Chromium or Cyanide Rinse		4,258	3,791,840,777
25	Electropolishing		255	4,485,954
25R.	Electropolishing Rinse		253	312,554,885
26	Floor Cleaning		33,326	3,559,210,563
26R.	Floor Cleaning Rinse		1,618	46,759,620
27	Grinding		2,193	202,036,389
27R.	Grinding Rinse		217	2,831,300,319
28	Heat Treating	T	789	196,798,353
28R.	Heat Treating Rinse		612	1,804,100,965

Survey Unit Operation Number	Unit Operation Description	Typically Performed Dry	Estimated Number of MP&M Sites Discharging Wastewater from Unit Operation	Total Estimated Industry Discharge Flow from Unit Operation[b] (gpy)
29	Impact Deformation	T	196	46,225,701
29R.	Impact Deformation Rinse		75	8,976,240
30	Machining		3,156	735,611,690
30R.	Machining Rinse		297	76,349,552
31	Metal Spraying	T	52	186,019
32	Painting - Spray or Brush		1,117	1,349,687,217
32R.	Painting - Spray or Brush Rinse		178	1,632,505,169
33	Painting - Immersion		271	237,430,089
33R.	Painting - Immersion Rinse		211	165,435,138
34	Plasma Arc Machining	T	458	11,893,377
35	Polishing	T	540	96,480,600
35R.	Polishing Rinse		491	1,687,785,986
36	Pressure Deformation	T	287	268,653,304
36R.	Pressure Deformation Rinse		92	1,105,233,854
37	Salt Bath Descaling		48	62,902
37R.	Salt Bath Descaling Rinse		67	56,171,145
38	Soldering/Brazing	T	663	425,693,444
38R.	Soldering/Brazing Rinse		1,966	264,719,840
39	Solvent Degreasing[c]	T	106	327,960
39R.	Solvent Degreasing Rinse		433	36,576,913
40	Stripping (Paint)		1,089	82,557,395
40R.	Stripping (Paint) Rinse		1,573	796,054,566
41	Stripping (Metallic Coating)		1,081	7,415,225
41R.	Stripping (Metallic Coating) Rinse		1,447	1,266,477,035
42	Testing		2,351	4,183,822,841
42R.	Testing Rinse		591	138,207,480
43	Thermal Cutting		124	104,662,316
43R.	Thermal Cutting Rinse		3	28
44	Washing Finished Products		16,862	2,563,540,125
44R.	Washing Finished Products Rinse		2,798	703,810,287
45	Welding	T	530	1,180,762,371
45R.	Welding Rinse		194	61,351,089
46	Wet Air Pollution Control		2,290	3,332,852,389

Source: MP&M Survey Database
[a] MP&M Survey information was used to generate these estimated industry flows and site counts.
[b] These totals do not include sites generating process wastewater that is contract hauled off site or not discharged.
[c] Solvent degreasing operations reported as using process water are included under alkaline treatment (see unit operation #5).

4.3 Trends in the Industry

For the development of the MP&M rule, EPA collected data from the MP&M industry for over 10 years, including detailed surveys in 1990 and 1996. Survey data and industry site visits and sampling have shown numerous changes in the industry between 1990 and 1996. A greater number of facilities now have some type of wastewater treatment system in place. Survey data show a 30 percent industry increase in treatment systems between 1990 and 1996. Many sites have also begun to implement advanced treatment systems that include ultrafiltration for increased organics removal and microfiltration units to improve clarification. The MP&M survey database indicates that (in 1990) 260 of the facilities with wastewater treatment in place are currently using membrane filtration. By 1996, that number increased to 700. In addition, sites are moving toward greater implementation of pollution prevention and water reduction, including progression to zero discharge when possible. Fifty-three percent currently have in-process pollution prevention or water use reduction practices in place, and over 27 percent of discharging sites report having wet unit operations with zero discharge. Improvements in treatment controls are allowing for more automated process controls. This leads to more consistent wastewater treatment. Advances in wastewater treatment chemicals are also improving treatment efficiencies.

4.4 References

1. Cubberly, William H. (ed.). Tool and Manufacturing Engineers Handbook, Desk Edition, Society of Manufacturing Engineers, Dearborne, MI, 1989.

2. Detrisac, M. Arthur. "Treatable Cleaners," Metal Finishing. September 1991.

3. U.S. Environmental Protection Agency. Development Document for Effluent Limitations Guidelines and Standards for the Metal Finishing Point Source Category. EPA 440/1-83/091, June 1983.

4. Mohler, J.B. "Alkaline Cleaning for Electroplating," Metal Finishing. September 1984.

5. Wood, William G. (Coordinator). The New Metals Handbook, Vol. 5. Surface Cleaning, Finishing, and Coating. American Society for Metals, May 1990.

6. Lowenheim, Frederick A. Electroplating Fundamentals of Surface Finishing, McGraw-Hill Book Company, New York, NY, 1978.

7. Murphy, Michael (ed.). Metal Finishing Guidebook and Directory Issue '93, Metal Finishing. January 1993.

5.0 WASTEWATER CHARACTERISTICS

This section summarizes the characteristics of wastewater generated from MP&M unit operations and raw wastewater entering wastewater treatment systems at MP&M facilities. EPA classified wastewater generated from MP&M unit operations into the following types based on composition and treatment requirements:

- Hexavalent chromium-bearing wastewater;
- Cyanide-bearing wastewater;
- Oil- and organic pollutant-bearing wastewater;
- Chelated metal-bearing wastewater; and
- General metal-bearing wastewater.

Sections 5.1 through 5.5 summarize the unit operations generating each type of wastewater and the analytical data obtained from sampled MP&M unit operations and wastewater treatment influent streams. For each pollutant analyzed, EPA lists the number of samples analyzed, the number of times EPA detected the pollutant, and the minimum, maximum, mean, and median detected concentrations. EPA obtained analytical data for unit operations and wastewater treatment systems from the MP&M sampling program. EPA obtained additional analytical data from sampling conducted by sanitation districts and MP&M industry trade associations. Sections 3.1, 3.4, and 3.5 describe the MP&M sampling program and sampling episodes conducted by sanitation districts and MP&M industry trade associations. All data presented in this section have undergone complete analytical QA/QC.

During the MP&M sampling program, EPA collected 444 wastewater samples representing 50 distinct unit operations and rinses. These samples, which characterize unit operations that comprise approximately 90 percent of the total MP&M process wastewater discharge flow, are discussed in this section. The MP&M surveys identified an additional 20 unit operations and 24 rinses, accounting for approximately 10 percent of MP&M process wastewater discharge flow. EPA transferred data to these operations and rinses from the sampling data, based on process characteristics, as discussed in Section 12.1.2.

Unit operation-specific analytical data for the operations sampled during the MP&M sampling program are contained in the administrative record for this rulemaking.

5.1 Hexavalent Chromium-Bearing Wastewater

Hexavalent chromium-bearing wastewater contains elevated concentrations of hexavalent chromium along with other metals such as aluminum or iron. The wastewater is generally acidic. Sections 5.1.1 and 5.1.2 discuss hexavalent chromium-bearing wastewater generated from MP&M unit operations and as influent to chromium-reduction wastewater treatment units, respectively.

5.1.1 Unit Operations Generating Hexavalent Chromium-Bearing Wastewater

Table 5-1 summarizes the unit operations and associated rinses that generate hexavalent chromium-bearing wastewater and the number of samples collected of each.

Table 5-1

Number of Process and Rinse Samples for Unit Operations That Generate Hexavalent Chromium-Bearing Wastewater

Unit Operation	No. of Process Samples	No. of Rinse Samples
Acid Treatment with Chromium	1	3
Anodizing with Chromium	3	7
Chromate Conversion Coating	15	21
Electroplating with Chromium	4	14
Wet Air Pollution Control for Chromium-Bearing Operations	6	NA

Source: MP&M surveys and MP&M site visits.
NA - Not applicable. No associated rinse.

Hexavalent chromium is present in wastewater as a component of the process bath (e.g., chromic acid anodizing, chromate conversion coating, chromium electroplating). MP&M facilities install wet air pollution control devices to control air emissions of the chromium process bath constituents. Total and hexavalent chromium concentrations in process baths average 24,022 mg/L and 10 mg/L, respectively. In the associated rinses, the maximum concentration for total and hexavalent chromium from EPA's sampling was 17,300 mg/L and 21.2 mg/L, respectively. Table 5-2 summarizes the MP&M analytical data for total and hexavalent chromium in wastewater from unit operations and associated rinses that generate total and hexavalent chromium-bearing wastewater. Based on the process chemistry of the unit operations (e.g., chromium is present in the hexavalent form in a chromic acid solution), the Agency believes that some chromium present in this wastewater is in the hexavalent form. For the purposes of estimating compliance costs, the Agency assumed that all chromium in this wastewater is in the hexavalent form. EPA made this assumption to provide a conservative assessment of the costs associated with chromium reduction treatment. (See Section 11 for a discussion on EPA's Design and Cost Model).

Table 5-2

Summary of Analytical Data for Chromium From Unit Operations and Rinses Generating Chromium-Bearing Wastewater

Source of Pollutant	Chromium Form	No. of Samples Analyzed	No. of Detects	Concentrations (mg/L)			
				Minimum	Maximum	Mean	Median
Unit Operations	Total	29	29	0.045	139,000	24,022	2,410
	Hexavalent	2	1	10	10	10	10
Rinses	Total	45	45	0.22	17,300	1,229	19.3
	Hexavalent	6	6	2.1	21.2	10.3	8

Source: MP&M sampling program.

5.1.2 Chromium-Bearing Raw Wastewater Characteristics

Typically, MP&M facilities segregate hexavalent chromium-bearing wastewater generated from the unit operations listed in Table 5-1 and treat it in a chromium reduction unit before commingling with other process wastewater for further treatment. Section 8.2.1 describes chromium reduction technologies used in the MP&M industry. This segregated wastestream requires preliminary treatment to reduce hexavalent chromium to trivalent chromium since hexavalent chromium is not effectively treated in chemical precipitation systems. Table 5-3 summarizes the analytical data for hexavalent chromium and total chromium in the raw influent to chromium reduction units. (See Section 10.0 for a discussion on achievable effluent concentrations of chromium following chromium reduction and chemical precipitation).

Table 5-3

Summary of Analytical Data for Chromium in Chromium-Bearing Raw Wastewater at Influent to Hexavalent Chromium Treatment

Form of Chromium	No. of Samples Analyzed	No. of Detects	Concentrations (mg/L)			
			Minimum	Maximum	Mean	Median
Total Chromium	51	51	2.41	432	57.8	19.5
Hexavalent Chromium	21	18	0.027	20	6.70	4.0

Source: MP&M sampling program.

5.2 Cyanide-Bearing Wastewater

Cyanide-bearing wastewater contains elevated concentrations of cyanide along with other metals such as copper, cadmium, or zinc. High concentrations of cyanide are typically found in electroplating baths. Cyanide may be analyzed as total cyanide (i.e., all forms included), amenable cyanide (i.e., cyanide present in forms amenable to treatment using alkaline chlorination), or weak-acid-dissociable cyanide (i.e., cyanide that dissociates in a weak acid). For the purposes of sizing and costing alkaline chlorination systems, EPA made the conservative assumption that all detected total cyanide was present in a form amenable to alkaline chlorination. Sections 5.2.1 and 5.2.2 discuss cyanide-bearing wastewater generated from MP&M unit operations and as influent to cyanide treatment units, respectively.

5.2.1 Unit Operations Generating Cyanide-Bearing Wastewater

Table 5-4 summarizes the unit operations and associated rinses that generate cyanide-bearing wastewater and the number of samples collected of each.

Table 5-4

Number of Process and Rinse Samples for Unit Operations That Generate Cyanide-Bearing Wastewater

Unit Operation	No. of Process Samples	No. of Rinse Samples
Alkaline Treatment with Cyanide	2	4
Electroplating with Cyanide	8[a]	23
Wet Air Pollution Control for Cyanide-Bearing Operations	3	NA

Source: MP&M surveys and MP&M site visits.
NA - Not applicable. No associated rinse.
[a] Does not include one sample from a gold-cyanide electroplating bath that was only analyzed for metals.

Cyanide is present as a component of electroplating and cleaning baths and in wet air pollution control wastewater for cyanide-bearing unit operations. Table 5-5 summarizes the analytical data for total and amenable cyanide collected during the MP&M sampling program from individual unit operations and their associated rinses that generate cyanide-bearing wastewater. Cyanide electroplating baths and rinses also contain several metal pollutants (typically cadmium, copper, or silver) depending on the type of metal being electroplated.

Table 5-5

Summary of Analytical Data for Cyanide from Unit Operations and Rinses Generating Cyanide-Bearing Wastewater

Source of Pollutant	Cyanide Form	No. of Samples Analyzed	No. of Detects	Concentrations (mg/L)			
				Minimum	Maximum	Mean	Median
Unit Operations	Total	13	13	0.12	100,000	18,964	9,370
	Amenable	0	NA	NA	NA	NA	NA
Rinses	Total	24	24	0.054	51,000	5,663	12
	Amenable	1	1	0.34	0.34	0.34	0.34

Source: MP&M sampling program.
NA - Not applicable. No samples were analyzed for amenable cyanide.

5.2.2 Cyanide-Bearing Raw Wastewater Characteristics

Typically, MP&M facilities segregate cyanide-bearing wastewater generated from the unit operations listed in Table 5-4 and treat it in a cyanide destruction unit before commingling with other process wastewater for further treatment. This preliminary treatment prevents cyanide complexes from forming in the commingled wastewater. These complexes decrease the effectiveness of chemical precipitation. Section 8.2.3 discusses cyanide treatment technologies. Table 5-6 summarizes the analytical data for cyanide in the influent to cyanide treatment units. (See Section 10.0 for a discussion of achievable effluent concentrations of cyanide following cyanide destruction.)

Table 5-6

Summary of Analytical Data for Cyanide in Cyanide-Bearing Raw Wastewater at Influent to Cyanide Treatment

Source of Pollutant	No. of Samples Analyzed	No. of Detects	Concentrations (mg/L)			
			Minimum	Maximum	Mean	Median
Total Cyanide	91	88	0.024	1,110	45.4	3.89
Amenable Cyanide	65	59	0.01	394	35.8	2.21

Source: MP&M sampling program.

5.3 Oil-Bearing and Organic Pollutant-Bearing Wastewater

Oil-bearing wastewater contains elevated concentrations of oil. This wastewater may need additional treatment for the removal of toxic organics. Oil-bearing wastewater is classified as either free oils or oil/water emulsions. Sections 5.3.1 and 5.3.2 discuss wastewater bearing oil and organic pollutants generated from MP&M unit operations and as influent to oily wastewater treatment units, respectively.

5.3.1 Unit Operations Generating Oil-Bearing and/or Organic Pollutant-Bearing Wastewater

Table 5-7 summarizes the unit operations and associated rinses that generate oil-bearing wastewater and the number of samples collected of each.

Table 5-7

Number of Process and Rinse Samples For Unit Operations That Generate Oil-Bearing and/or Organic Pollutant-Bearing Wastewater

Unit Operation	No. of Process Samples	No. of Rinse Samples
Alkaline Cleaning for Oil Removal	30	30
Aqueous Degreasing	12	6
Barrel Finishing	10	0
Bilge Water	1	0
Corrosion Preventive Coating	5	3
Dry Dock	4	0
Electrical Discharge Machining	1	0
Electrolytic Cleaning	7	14
Floor Cleaning	6	0
Grinding	5	0
Heat Treating	3	7
Impact Deformation	1	0
Machining	16	0
Painting - Spray or Brush	6	0
Painting - Immersion	1	2
Steam Cleaning	8	0
Solder Flux Cleaning	3	0
Solder Fusing	0	3
Testing	7	2
Thermal Cutting	2	0
Washing Finished Products	4	3

Source: MP&M surveys and MP&M site visits.

Tables 5-8 and 5-9 summarize the analytical data collected during the MP&M sampling program from individual unit operations that generate oil-bearing wastewater and their associated rinses, respectively. MP&M facilities typically use oil/water emulsions as coolants and lubricants in machining, grinding, and deformation operations. Oil is also present as a contaminant in wastewater from cleaning operations. The maximum concentration of oil and grease in wastewater sampled by EPA from these unit operations was 36,850 mg/L (from an alkaline cleaning bath), while the maximum concentration of oil and grease in the wastewater from the rinses associated with these unit operations was 9,195 mg/L.

As shown in Tables 5-8 and 5-9, the oil-bearing wastewater also contains numerous organic pollutants. These pollutants are either components of the oil/water emulsions or contaminants in the cleaning solutions. The maximum organic pollutant concentration found in

EPA samples was 19,813 mg/L of benzoic acid from a testing unit operation. The maximum organic pollutant concentration in the rinses was 160 mg/L for n-tetradecane from a testing rinse operation. Tables 5-8 and 5-9 show that these unit operations also contain conventional, non-conventional, and metal pollutants.

A major source of organic pollutants at MP&M facilities is solvent degreasing. Solvent degreasing operations use organic solvents such as trichloroethylene or mineral spirits, and do not use water. Therefore, for the purposes of the MP&M effluent guidelines, EPA did not consider waste from solvent degreasing a regulated wastewater. In rare situations, EPA identified rinses following solvent degreasing. EPA classified these rinses as MP&M wastewater. The Agency classified cleaning operations that use an emulsion of water and solvents as emulsion cleaning (a subset of alkaline cleaning) and considered these waste streams as MP&M regulated wastewater.

Table 5-8

Analytical Data for Unit Operations Generating Oil-Bearing and/or Organic-Bearing Wastewater

Pollutant Parameter	No. of Samples Analyzed	No. of Detects	Concentrations (mg/L)			
			Minimum	Maximum	Mean	Median
Priority Organic Pollutants						
1,1,1-Trichloroethane	72	1	0.011	0.011	0.011	0.011
1,1,2,2-Tetrachloroethane	70	1	0.011	0.011	0.011	0.011
1,1,2-Trichloroethane	72	1	0.012	0.012	0.012	0.012
1,2-Dichlorobenzene	72	1	0.638	0.638	0.638	0.638
2,4,6-Trichlorophenol	72	1	0.014	0.014	0.014	0.014
2,4-Dimethylphenol	71	4	0.016	0.064	0.051	0.062
4-Chloro-3-Methylphenol	72	11	0.011	91.1	18.2	0.587
4-Nitrophenol	70	1	0.424	0.424	0.424	0.424
Acrolein	72	1	0.161	0.161	0.161	0.161
Acrylonitrile	72	1	0.061	0.061	0.061	0.061
Anthracene	72	1	0.193	0.193	0.193	0.193
Benzene	72	2	0.014	0.044	0.03	0.029
Bis(2-ethylhexyl) Phthalate	72	21	0.012	143	7.44	0.085
Bromodichloromethane	72	3	0.012	0.072	0.032	0.012
Butyl Benzyl Phthalate	72	1	0.066	0.066	0.066	0.066
Chlorobenzene	72	2	0.028	0.058	0.043	0.043
Chloroethane	72	1	8.34	8.34	8.34	8.34
Chloroform	72	5	0.010	0.019	0.014	0.013

Table 5-8 (Continued)

Pollutant Parameter	No. of Samples Analyzed	No. of Detects	Concentrations (mg/L)			
			Minimum	Maximum	Mean	Median
Priority Organic Pollutants (continued)						
Chloromethane	72	1	0.069	0.069	0.069	0.069
Di-n-butyl Phthalate	72	4	0.012	0.070	0.038	0.035
Di-n-octyl Phthalate	72	1	0.020	0.020	0.020	0.020
Dibromochloromethane	72	2	0.010	0.011	0.011	0.011
Dimethyl Phthalate	72	2	0.021	2.000	1.010	1.010
Ethylbenzene	72	5	0.028	2.91	0.773	0.191
Fluoranthene	72	4	0.029	0.243	0.132	0.129
Fluorene	72	2	0.010	0.021	0.015	0.015
Methylene Chloride	72	3	0.028	6.76	2.27	0.030
n-nitrosodiphenylamine	72	1	0.025	0.025	0.025	0.025
Naphthalene	72	5	0.019	1.839	0.413	0.081
Phenanthrene	72	4	0.101	5.50	1.47	0.143
Phenol	72	21	0.012	8.84	1.05	0.05
Tetrachloroethene	72	2	0.015	0.02	0.02	0.018
Toluene	72	7	0.029	0.653	0.162	0.103
Trichloroethene	72	8	0.019	0.042	0.024	0.021
Priority Metal Pollutants						
Antimony	131	40	0.004	0.804	0.124	0.040
Arsenic	132	57	0.001	1.65	0.100	0.021
Beryllium	132	21	0.000	0.025	0.004	0.002
Cadmium	132	71	0.002	12.1	1.12	0.097
Chromium	132	104	0.007	255	5.43	0.136
Copper	132	123	0.006	190	6.58	0.660
Cyanide	10	7	0.004	0.232	0.078	0.059
Lead	132	78	0.006	1,450	29.9	0.538
Mercury	132	28	0.000	0.017	0.001	0.000
Nickel	132	94	0.013	80.9	2.24	0.164
Selenium	131	37	0.001	1.57	0.099	0.021
Silver	132	39	0.003	2.12	0.175	0.016
Thallium	131	20	0.001	0.113	0.021	0.018
Zinc	132	121	0.008	1,160	37.2	1.39
Conventional Pollutants						
BOD 5-day (Carbonaceous)	64	56	3	64,900	3,207	645
Oil And Grease	63	59	2.4	570,000	28,592	790

Table 5-8 (Continued)

Pollutant Parameter	No. of Samples Analyzed	No. of Detects	Concentrations (mg/L)			
			Minimum	Maximum	Mean	Median
Conventional Pollutants (continued)						
Oil and Grease (as HEM)	66	50	7.75	36,850	2,351	211
pH	69	69	3.44	13.9	8.85	8.24
Total Suspended Solids	132	127	4	43,580	1,940	185
Nonconventional Organic Pollutants						
1,4-Dioxane	72	2	0.077	1.00	0.539	0.539
1-Methylfluorene	72	3	0.014	2.60	0.912	0.123
1-Methylphenanthrene	72	3	0.122	5.65	1.97	0.147
2-(Methylthio)Benzothiazole	72	1	0.028	0.028	0.028	0.028
2-Butanone	72	13	0.057	38.3	3.70	0.101
2-Hexanone	72	3	0.124	0.505	0.263	0.161
2-Isopropylnaphthalene	72	1	7.34	7.34	7.34	7.34
2-Methylnaphthalene	72	9	0.011	3.14	0.511	0.236
2-Picoline	72	1	0.072	0.072	0.072	0.072
2-Propanone	72	40	0.060	11.9	0.966	0.220
3,6-Dimethylphenanthrene	72	1	8.50	8.5	8.50	8.50
4-Methyl-2-Pentanone	72	10	0.124	159	22.6	0.457
Acetophenone	72	1	0.566	0.566	0.566	0.566
Alpha-terpineol	71	12	0.012	14.1	2.69	1.780
Benzoic Acid	72	13	0.071	19,813	1,525	0.287
Benzyl Alcohol	72	3	0.023	0.208	0.108	0.094
Biphenyl	72	2	0.014	0.038	0.026	0.026
Cis-1,3-dichloropropene	72	1	0.012	0.012	0.012	0.012
Diphenyl Ether	72	1	0.013	0.013	0.013	0.013
Diphenylamine	72	2	0.024	0.026	0.025	0.025
Hexanoic Acid	72	24	0.019	1,490	66.3	0.903
Isobutyl Alcohol	72	3	0.012	1.31	0.446	0.018
m+p xylene	47	2	0.013	0.352	0.183	0.183
m-xylene	25	3	0.153	5.06	2.45	2.13
n,n-dimethylformamide	72	5	0.028	0.665	0.265	0.036
n-decane	72	9	0.017	1.33	0.462	0.132
n-docosane	72	23	0.013	141	7.98	0.164
n-dodecane	72	24	0.011	36.8	3.60	0.419
n-eicosane	72	29	0.012	14.1	1.40	0.190
n-hexacosane	72	20	0.011	109	7.43	0.099

Table 5-8 (Continued)

Pollutant Parameter	No. of Samples Analyzed	No. of Detects	Concentrations (mg/L)			
			Minimum	Maximum	Mean	Median
Nonconventional Organic Pollutants (continued)						
n-hexadecane	72	28	0.015	95.3	6.64	0.444
n-octacosane	72	8	0.035	61.1	10.4	0.524
n-octadecane	72	28	0.01	264	13.1	0.198
n-tetracosane	72	17	0.011	116	9.34	0.267
n-tetradecane	72	29	0.011	48.5	6.48	0.674
n-triacontane	72	12	0.012	31.9	3.78	0.433
o+p xylene	25	3	0.063	2.01	1.19	1.48
o-xylene	47	6	0.010	0.201	0.044	0.013
p-cresol	72	6	0.010	4.31	0.74	0.029
p-cymene	72	2	0.021	0.1	0.04	0.036
Styrene	72	1	1.184	1.18	1.18	1.18
Toluene, 2,4-diamino-	72	1	101	101	101	101
Trichlorofluoromethane	72	1	0.106	0.106	0.106	0.106
Tripropyleneglycol Methyl Ether	72	5	1.93	5,254	1,462	413
Nonconventional Metal Pollutants						
Aluminum	132	113	0.039	414	22.3	1.83
Barium	132	114	0.001	31.4	1.88	0.108
Bismuth	1	1	0.058	0.058	0.058	0.058
Boron	132	113	0.059	2,290	87.1	1.27
Calcium	132	128	0.274	981	63.9	38.75
Cobalt	132	54	0.005	1.26	0.131	0.037
Gold	6	2	0.081	1.66	0.871	0.871
Iridium	1	1	0.596	0.596	0.596	0.596
Iron	132	126	0.016	2,790	50.2	6.10
Lutetium	1	1	0.007	0.007	0.007	0.007
Magnesium	132	121	0.088	213	24.6	10.5
Manganese	132	122	0.002	24.1	1.36	0.271
Molybdenum	132	87	0.003	774	11.7	0.095
Neodymium	1	1	0.020	0.020	0.020	0.020
Niobium	1	1	0.104	0.104	0.104	0.104
Potassium	1	1	0.574	0.574	0.574	0.574
Silicon	1	1	19.9	19.9	19.9	19.9
Sodium	132	128	1.61	68,700	3,847	299
Strontium	1	1	8.02	8.0186	8.02	8.02

Table 5-8 (Continued)

Pollutant Parameter	No. of Samples Analyzed	No. of Detects	Concentrations (mg/L)			
			Minimum	Maximum	Mean	Median
Nonconventional Metal Pollutants (continued)						
Sulfur	1	1	0.636	0.636	0.636	0.636
Tantalum	1	1	0.134	0.134	0.134	0.134
Tin	132	61	0.004	852	15.7	0.101
Titanium	132	86	0.001	30.0	0.658	0.045
Tungsten	1	1	0.175	0.175	0.175	0.175
Vanadium	132	51	0.005	0.482	0.072	0.023
Ytterbium	1	1	0.006	0.006	0.006	0.01
Yttrium	132	37	0.001	0.900	0.045	0.008
Other Nonconventional Pollutants						
Acidity	51	17	1.00	250,000	14,818	9.00
Ammonia As Nitrogen	43	36	0.160	1,600	71.8	2.54
Chemical Oxygen Demand (COD)	107	103	22.4	366,000	27,871	4,930
Chloride	52	49	2.00	48,000	1,604	180
Fluoride	59	56	0.130	35.0	3.92	1.35
Hexavalent Chromium	63	13	0.016	1.70	0.207	0.055
Sulfate	66	54	1.50	46,000	2,483	272.23
Total Alkalinity	53	52	51.5	92,000	13,989	2,000
Total Dissolved Solids	128	128	33.5	411,420	23,538	4,500
Total Kjeldahl Nitrogen	44	41	0.200	580	68.9	37.0
Total Organic Carbon (TOC)	67	63	4.26	118,000	7,184	471
Total Petroleum Hydrocarbons (As SGT-HEM)	65	42	6.00	6,230	481	52.5
Total Phosphorus	35	34	0.065	7,170	291	18.85
Total Recoverable Phenolics	105	87	0.005	33.8	1.67	0.197
Total Sulfide	9	5	1.00	11.0	4.40	2.00

Source: MP&M sampling program.

Table 5-9

Analytical Data for Rinses Generating Oil-Bearing and/or Organic-Bearing Wastewater

Pollutant Parameter	No. of Samples Analyzed	No. of Detects	Concentrations (mg/L)			
			Minimum	Maximum	Mean	Median
Priority Organic Pollutants						
1,1,1-Trichloroethane	40	1	0.023	0.023	0.023	0.023
1,1-Dichloroethane	40	1	0.039	0.039	0.039	0.039
2,6-Dinitrotoluene	40	1	0.616	0.616	0.616	0.616
4-Chloro-3-Methylphenol	40	2	0.023	0.050	0.037	0.037
Bis(2-Ethylhexyl) Phthalate	40	10	0.011	1.15	0.336	0.187
Bromodichloromethane	40	4	0.010	0.014	0.011	0.010
Chloroform	40	11	0.010	0.035	0.017	0.012
Di-n-butyl Phthalate	40	4	0.014	0.019	0.017	0.017
Ethylbenzene	40	3	0.021	0.039	0.029	0.028
Methylene Chloride	40	1	0.016	0.016	0.016	0.016
n-nitrosodi-n-propylamine	40	1	0.132	0.132	0.132	0.132
Naphthalene	40	3	0.021	2.01	0.892	0.643
Phenanthrene	40	1	0.527	0.527	0.527	0.527
Phenol	40	5	0.011	8.28	1.67	0.024
Toluene	40	2	0.011	0.045	0.028	0.028
Trichloroethene	40	6	0.011	0.022	0.02	0.02
Priority Metal Pollutants						
Antimony	69	18	0.0028	0.256	0.047	0.032
Arsenic	70	15	0.0013	0.303	0.037	0.008
Beryllium	70	5	0.0011	0.005	0.002	0.002
Cadmium	70	22	0.002	11.9	0.618	0.052
Chromium	70	41	0.009	104	2.88	0.159
Copper	70	59	0.008	14.7	0.958	0.144
Cyanide	2	2	0.010	1.45	0.730	0.730
Lead	70	23	0.031	6.89	1.17	0.495
Mercury	70	11	0.00005	0.001	0.0003	0.0002
Nickel	70	38	0.008	10.3	0.744	0.105
Selenium	69	5	0.001	0.232	0.082	0.031
Silver	70	16	0.004	0.081	0.022	0.010
Thallium	69	5	0.002	0.036	0.014	0.006
Zinc	70	53	0.009	46.7	2.28	0.134

Table 5-9 (Continued)

Pollutant Parameter	No. of Samples Analyzed	No. of Detects	Concentrations (mg/L)			
			Minimum	Maximum	Mean	Median
Conventional Pollutants						
BOD 5-day (Carbonaceous)	38	34	4.00	12,900	1,209	179
Oil And Grease	23	16	1.35	2,700	440	41.5
Oil And Grease (As HEM)	38	27	5.00	9,195	472	42
pH	38	38	2.40	13.2	9.24	9.31
Total Suspended Solids	70	56	4.00	2,560	178	64.2
Nonconventional Organic Pollutants						
1,4-Dioxane	40	1	0.196	0.196	0.196	0.196
1-Methylfluorene	40	1	0.129	0.129	0.129	0.129
1-Methylphenanthrene	40	1	1.02	1.02	1.02	1.02
2-Butanone	40	3	0.074	0.126	0.093	0.078
2-Isopropylnaphthalene	40	1	1.57	1.57	1.57	1.57
2-Methylnaphthalene	40	1	1.10	1.10	1.10	1.10
2-Propanone	40	14	0.055	3.10	0.444	0.197
3,6-Dimethylphenanthrene	40	1	0.811	0.811	0.811	0.811
4-Methyl-2-Pentanone	40	2	0.190	17.4	8.80	8.80
Alpha-Terpineol	39	2	65.3	67.3	66.3	66.3
Benzoic Acid	40	6	0.108	6.61	1.76	1.05
Benzyl Alcohol	40	2	2.73	24.8	13.8	13.8
Hexanoic Acid	40	15	0.015	28.4	2.40	0.536
m+p xylene	25	1	0.104	0.10	0.104	0.104
m-xylene	15	2	0.036	0.08	0.056	0.056
n,n-dimethylformamide	40	1	0.011	0.011	0.011	0.011
n-decane	40	1	5.01	5.01	5.01	5.01
n-docosane	40	7	0.018	6.47	1.07	0.030
n-dodecane	40	6	1.77	53.3	15.3	7.24
n-eicosane	40	13	0.011	2.4	0.490	0.172
n-hexacosane	40	8	0.011	1.46	0.443	0.250
n-hexadecane	40	10	0.011	52.7	11.0	0.755
n-octacosane	40	4	0.041	1.37	0.624	0.540
n-octadecane	40	10	0.018	4.03	0.952	0.159
n-tetracosane	40	10	0.012	17.0	1.87	0.094
n-tetradecane	40	6	0.221	160	53.3	3.12
n-triacontane	40	4	0.030	0.477	0.217	0.180
o-cresoL	40	1	0.012	0.012	0.012	0.012
o-xylene	25	1	0.056	0.056	0.056	0.056
p-cymene	40	1	0.190	0.190	0.190	0.190
Phenothiazine	40	1	0.582	0.582	0.582	0.582

Table 5-9 (Continued)

Pollutant Parameter	No. of Samples Analyzed	No. of Detects	Concentrations (mg/L)			
			Minimum	Maximum	Mean	Median
Nonconventional Organic Pollutants (continued)						
Trichlorofluoromethane	40	1	0.036	0.036	0.036	0.036
Tripropyleneglycol Methyl Ether	40	3	0.413	4.18	2.43	2.71
Nonconventional Metal Pollutants						
Aluminum	70	36	0.031	19.7	2.72	0.823
Barium	70	58	0.001	1.61	0.181	0.044
Boron	70	48	0.019	838	28.0	0.195
Calcium	70	66	0.940	175	34.8	22.8
Cobalt	70	11	0.007	0.546	0.102	0.024
Gold	4	2	0.056	0.086	0.071	0.071
Iron	70	53	0.034	453	18.1	0.275
Magnesium	70	65	0.137	37.3	9.69	8.00
Manganese	70	51	0.002	8.63	0.394	0.040
Molybdenum	70	36	0.006	187	5.34	0.023
Palladium	3	1	0.054	0.054	0.054	0.054
Sodium	70	68	1.63	19,100	603	87.2
Tin	70	25	0.006	10.9	1.18	0.056
Titanium	70	23	0.002	1.53	0.259	0.040
Vanadium	70	19	0.003	0.182	0.030	0.023
Yttrium	70	7	0.002	0.020	0.008	0.007
Other Nonconventional Pollutants						
Acidity	19	8	2.00	120	26.5	16.0
Ammonia as Nitrogen	13	8	0.02	0.920	0.439	0.43
Chemical Oxygen Demand (COD)	47	44	5.20	32,700	2,561	347
Chloride	19	19	3.00	64,500	3,435	22.0
Fluoride	19	19	0.11	135	7.80	0.710
Hexavalent Chromium	38	12	0.011	0.069	0.025	0.022
Sulfate	26	22	6.60	780	122	29.0
Total Alkalinity	19	18	24	3,800	518	195
Total Dissolved Solids	70	69	26	120,000	3,563	708
Total Kjeldahl Nitrogen	10	7	0.36	149	23	1.68
Total Organic Carbon (TOC)	38	35	2.66	10,100	867	120
Total Petroleum Hydrocarbons (As SGT-	37	19	5.00	7,367	455	28.0
Total Phosphorus	7	7	0.06	11.0	4.1	2.16
Total Recoverable Phenolics	48	37	0.0056	2.78	0.233	0.070
Total Sulfide	1	1	12.0	12.0	12.0	12.0

Source: MP&M sampling program.

5.3.2 Oil-Bearing and Organic Pollutant-Bearing Raw Wastewater Characteristics

Wastewater containing oil and organic pollutants generated from the unit operations listed in Table 5-7 generally requires treatment to separate oil from the wastewater. If the oils are free or floating, then the oil and water can be separated using physical means such as oil skimming or ultrafiltration. If the oil is emulsified, techniques such as chemical emulsion breaking may be required before physical separation. Oil/water separation technologies also remove organic pollutants that are more soluble in oil than in water. Sections 8.2.5 and 8.3.2 discuss oil-water separation technologies used in the MP&M industry. Table 5-10 summarizes the characteristics of raw wastewater influent to oily wastewater treatment systems. (See Section 10.0 for a discussion on achievable effluent concentrations of oil and grease and organics following oil/water separation and chemical precipitation.)

Table 5-10

Analytical Data for Oil-Bearing and Organic Pollutant-Bearing Raw Wastewater Streams at Influent to Oil/Water Separation

Pollutant Parameter	No. of Samples Analyzed	No. of Detects	Concentrations (mg/L)			
			Minimum	Maximum	Mean	Median
Priority Organic Pollutants						
1,1,1-Trichloroethane	82	5	0.006	0.022	0.013	0.013
1,2-Dichlorobenzene	82	1	0.638	0.638	0.638	0.638
2,4-Dimethylphenol	81	2	0.017	0.270	0.144	0.144
2-Nitrophenol	82	1	0.025	0.025	0.025	0.025
4-Chloro-3-Methylphenol	82	18	0.247	3,834	706	101
Acenaphthene	82	5	0.006	1.82	0.396	0.025
Acrolein	77	1	0.168	0.168	0.168	0.168
Anthracene	82	1	0.007	0.007	0.007	0.007
Benzene	82	2	0.007	0.012	0.010	0.010
Bis(2-Ethylhexyl) Phthalate	81	62	0.007	216	6.66	0.157
Butyl Benzyl Phthalate	81	7	0.024	2.73	0.440	0.065
Carbon Tetrachloride (Tetrachloromethane)	82	3	0.011	0.046	0.025	0.017
Chloroform	82	6	0.010	0.038	0.019	0.016
Chloromethane	82	1	0.736	0.736	0.736	0.736
Di-n-butyl Phthalate	81	8	0.011	0.193	0.087	0.080
Di-n-octyl Phthalate	82	10	0.010	19.7	2.37	0.332
Ethylbenzene	82	18	0.010	0.260	0.077	0.036

Table 5-10 (Continued)

Pollutant Parameter	No. of Samples Analyzed	No. of Detects	Concentrations (mg/L)			
			Minimum	Maximum	Mean	Median
Priority Organic Pollutants (continued)						
Fluorene	82	6	0.010	9.93	1.71	0.067
n-Nitrosodiphenylamine	82	5	0.025	2.59	1.34	1.69
Naphthalene	82	15	0.011	8.91	1.04	0.046
Phenanthrene	82	17	0.012	5.30	0.486	0.033
Phenol	81	31	0.018	27.1	1.31	0.138
Pyrene	81	2	0.031	1.01	0.521	0.521
Tetrachloroethene	82	1	0.006	0.006	0.006	0.006
Toluene	82	21	0.006	1.35	0.199	0.033
Priority Metal Pollutants						
Antimony	86	33	0.002	0.105	0.022	0.017
Arsenic	86	38	0.002	0.534	0.036	0.006
Beryllium	86	20	0.0002	0.187	0.036	0.002
Cadmium	86	62	0.002	12.1	0.805	0.030
Chromium	86	74	0.003	15.9	0.726	0.071
Copper	86	86	0.027	232	23.0	0.408
Lead	86	70	0.006	210	17.1	0.239
Mercury	86	26	0.0001	0.003	0.0009	0.0004
Nickel	86	71	0.012	18.4	0.913	0.155
Selenium	86	13	0.001	0.124	0.028	0.011
Silver	86	18	0.004	2.8	0.272	0.022
Thallium	86	6	0.001	0.068	0.012	0.001
Zinc	86	84	0.145	664	26.0	1.66
Conventional Pollutants						
BOD 5-Day (Carbonaceous)	75	69	4	21,300	2,745	675
Oil And Grease	86	84	8.33	261,500	12,149	872
Total Suspended Solids	86	84	6	100,000	3,712	260
Nonconventional Organic Pollutants						
1,4-Dioxane	77	2	0.080	0.105	0.093	0.093
1-Methylfluorene	77	10	0.010	1.72	0.223	0.020
1-Methylphenanthrene	77	9	0.015	1.23	0.243	0.027
1-Naphthylamine	77	1	0.034	0.034	0.034	0.034
2-(Methylthio)Benzothiazole	77	3	0.012	0.023	0.017	0.015
2-Butanone	77	9	0.130	0.483	0.287	0.256
2-Hexanone	77	2	0.505	0.512	0.509	0.509

Table 5-10 (Continued)

Pollutant Parameter	No. of Samples Analyzed	No. of Detects	Concentrations (mg/L)			
			Minimum	Maximum	Mean	Median
Nonconventional Organic Pollutants (continued)						
2-Isopropylnaphthalene	77	2	0.421	3.49	1.96	1.96
2-Methylnaphthalene	77	17	0.029	13.0	1.17	0.132
2-Propanone	77	62	0.060	28.8	4.48	0.858
3,6-Dimethylphenanthrene	77	5	0.013	1.28	0.583	0.371
4-Methyl-2-Pentanone	77	10	0.073	6.72	0.835	0.153
Acetophenone	77	3	0.014	0.092	0.051	0.047
Alpha-Terpineol	77	32	0.011	189	19.9	1.59
Aniline	77	1	0.014	0.014	0.014	0.014
Benzoic Acid	77	4	0.108	0.522	0.288	0.261
Benzyl Alcohol	77	11	0.011	10.8	1.08	0.141
Biphenyl	77	10	0.014	1.54	0.220	0.054
Carbazole	77	1	0.035	0.035	0.035	0.035
Carbon Disulfide	77	5	0.045	0.466	0.312	0.369
Dibenzofuran	77	1	0.014	0.014	0.014	0.014
Dibenzothiophene	76	3	0.015	1.293	0.452	0.048
Diphenylamine	77	5	0.034	1.99	1.24	1.66
Hexanoic Acid	77	31	0.011	31.9	4.61	0.508
m+p-Xylene	39	11	0.023	0.457	0.169	0.139
m-Xylene	38	6	0.018	0.312	0.071	0.024
n,n-Dimethylformamide	77	2	0.014	0.023	0.019	0.019
n-Decane	77	32	0.013	27.7	2.94	0.086
n-Docosane	77	43	0.011	79.7	2.87	0.119
n-Dodecane	77	47	0.017	207	23.2	0.919
n-Eicosane	76	52	0.010	109	6.67	0.220
n-Hexacosane	77	32	0.014	217	9.09	0.169
n-Hexadecane	77	58	0.012	145	8.60	0.362
n-Nitrosomorpholine	77	2	0.012	0.135	0.074	0.074
n-Octacosane	77	8	0.075	70.7	16.1	6.17
n-Octadecane	77	59	0.011	162	6.43	0.273
n-Tetracosane	76	32	0.021	56.8	3.32	0.248
n-Tetradecane	77	61	0.011	243	15.7	0.277
n-Triacontane	76	10	0.016	25.6	5.60	1.55
o+p-Xylene	38	6	0.011	0.030	0.021	0.021
o-Cresol	77	1	0.047	0.047	0.047	0.047

Table 5-10 (Continued)

Pollutant Parameter	No. of Samples Analyzed	No. of Detects	Concentrations (mg/L)			
			Minimum	Maximum	Mean	Median
Nonconventional Organic Pollutants (continued)						
o-Xylene	39	14	0.012	0.130	0.065	0.071
p-Cresol	77	10	0.018	1.09	0.297	0.056
p-Cymene	77	10	0.015	14.6	1.54	0.079
Pentamethylbenzene	77	1	1.24	1.24	1.24	1.24
Pyridine	77	15	0.014	3.42	1.02	0.063
Safrole	77	1	0.065	0.065	0.065	0.065
Tripropyleneglycol Methyl Ether	77	11	0.447	1,550	386	30.1
Nonconventional Metal Pollutants						
Aluminum	86	76	0.076	134	14.3	3.58
Barium	86	85	0.019	32	2.06	0.186
Boron	86	85	0.191	686	37.6	6.39
Calcium	86	85	1.66	2,200	170	41.3
Cobalt	86	41	0.008	1.22	0.212	0.102
Gold	1	1	2.81	2.81	2.81	2.81
Iron	86	84	0.604	940	52.7	11.0
Magnesium	86	84	0.180	255	38.3	11.9
Manganese	86	84	0.031	29	1.90	0.373
Molybdenum	86	66	0.003	40.3	1.50	0.098
Sodium	86	85	27.1	2,030	442	210
Tin	86	55	0.003	85.2	3.22	0.058
Titanium	86	64	0.003	1.80	0.194	0.079
Vanadium	86	43	0.004	0.482	0.060	0.025
Yttrium	86	24	0.001	1.00	0.091	0.013
Other Nonconventional Pollutants						
Ammonia as Nitrogen	11	11	0.290	160	44.5	24.4
Chemical Oxygen Demand (COD)	85	85	30	213,000	24,961	5,750
Chloride	7	7	22	450	110	37.0
Fluoride	12	12	0.500	17	2.94	0.975
Hexavalent Chromium	71	14	0.010	1.74	0.195	0.021
Sulfate	35	34	16	176,000	15,585	430
Total Alkalinity	6	6	180	4,900	1,498	210
Total Dissolved Solids	82	82	272	88,800	9,930	2,600
Total Kjeldahl Nitrogen	11	11	0.840	1,500	302	8.86

Table 5-10 (Continued)

Pollutant Parameter	No. of Samples Analyzed	No. of Detects	Concentrations (mg/L)			
			Minimum	Maximum	Mean	Median
Other Nonconventional Pollutants (continued)						
Total Organic Carbon (TOC)	70	68	7.66	106,000	7,028	1,230
Total Petroleum Hydrocarbon (As SGT-HEM)	74	68	5.07	25,431	2,213	511
Total Phosphorus	20	20	0.160	240	38.2	17.0
Total Recoverable Phenolics	84	81	0.005	1,360	59.3	0.220
Total Sulfide	23	20	3.00	18.0	7.85	7.00

Source: MP&M sampling program.

5.4 Chelated Metal-Bearing Wastewater

Chelated metal-bearing wastewater contains elevated concentrations of metals, typically copper or nickel. Sections 5.4.1 and 5.4.2 discuss chelated metal-bearing wastewater generated from MP&M unit operations and as influent to chelation-breaking wastewater treatment units, respectively.

5.4.1 Unit Operations Generating Chelated Metal-Bearing Wastewater

Electroless plating operations and rinses are the most common MP&M operations that generate chelated metal-bearing wastewater. Some cleaning operations also generate chelated metal-bearing wastewater. MP&M facilities use chelating agents in these unit operations to prevent metals from precipitating out of solution in the process bath.

During the MP&M sampling program, EPA collected samples of electroless nickel plating solutions and rinses that generate chelated metal-bearing wastewater. The maximum concentration of nickel detected in wastewater from the unit operations was 7,530 mg/L, while the maximum concentration of nickel in the wastewater from rinses was 378 mg/L. Other metals typically plated using electroless plating include copper, gold, palladium, and cobalt. EPA expects the concentrations of the plated metals in these solutions and associated rinses to be similar to the concentrations measured for nickel during the MP&M sampling program.

5.4.2 Chelation-Breaking Raw Wastewater Characteristics

Typical chemical precipitation and sedimentation treatment units do not effectively remove chelated metals; therefore, chelated metal-bearing wastewater typically requires segregation and preliminary treatment to break down the metal chelates before commingling with other metal-bearing waste streams for further treatment. If facilities do not segregate these streams from other metal-bearing waste streams, the chelated metal will not be efficiently removed. EPA detected copper concentrations ranging from 570 mg/L to 700 mg/L in influent samples from

preliminary treatment systems for electroless copper operations. EPA detected nickel at concentrations ranging from 0.149 mg/L to 480 mg/L in influent samples from preliminary treatment systems for electroless nickel operations. (See Section 10.0 for a discussion on achievable effluent concentrations of these chelated metals following chelation breaking/removal and chemical precipitation.)

Preliminary treatment may consist of chemical reduction using reducing agents such as sodium borohydride, hydrazine, dithiocarbamate (measured analytically as ziram) or sodium hydrosulfite; high-pH precipitation using calcium hydroxide or ferrous sulfate; or filtering the chelated metals out of solution. Section 8.2.4 describes typical metal chelation-bearing wastewater treatment technologies used in the MP&M industry.

5.5 General Metal-Bearing Wastewater

All MP&M unit operations can generate metal-bearing wastewater, including those wastewater streams described in the previous sections. Sections 5.5.1 and 5.5.2 discuss metal-bearing wastewater not previously discussed that is generated from MP&M unit operations and treated in chemical precipitation systems, respectively.

5.5.1 Unit Operations Generating General Metal-Bearing Wastewater

Table 5-11 summarizes the unit operations and associated rinses that generate general metal-bearing wastewater and the number of samples collected of each.

Table 5-11

Number of Process and Rinse Samples From Unit Operations That Generate General Metal-Bearing Wastewater

Unit Operation	No. of Process Samples	No. of Rinse Samples
Abrasive Blasting	3	3
Abrasive Jet Machining	1	0
Acid Treatment without Chromium	26	57
Adhesive Bonding	1	0
Alkaline Treatment without Cyanide	12	34
Anodizing without Chromium	4	4
Carbon Black Deposition	1	0
Chemical Milling	5	12
Chemical Conversion Coating without Chromium	19	42
Electrochemical Machining	1	2
Electroless Plating	6	15
Electroplating without Chromium or Cyanide	18	41
Electropolishing	1	1
Multiple Unit Operation Rinse	1	0
Photo Image Developing	5	11
Photo Resist Applications	1	3
Plasma Arc Machining	1	0
Salt Bath Descaling	1	3
Stripping (paint)	10	16
Stripping (metallic coating)	8	8
Welding	0	1
Wet Air Pollution Control (includes Acid/Alkaline and Fumes and Dust)	16	NA

Source: MP&M surveys and MP&M site visits.
NA - Not Applicable. No associated rinse.

Tables 5-12 and 5-13 summarize the analytical data collected during the MP&M sampling program for wastewater from unit operations and associated rinses, respectively, that generate general metal-bearing wastewater. As shown in these tables, the priority metal pollutants most commonly detected in samples of this wastewater were copper, zinc, chromium, nickel, and lead. Nonconventional metal pollutants frequently detected include iron, magnesium, boron, barium, manganese, and aluminum. Metal pollutants are typically present in unit operation process baths that apply or remove metal, such as electroplating or stripping process baths. EPA detected metal concentrations of up to 383,000 mg/L in unit operation process baths and up to 85,300 mg/L in unit operation rinses. This wastewater also typically contained oil and grease, total suspended solids, and low concentrations of organic pollutants.

Table 5-12

Analytical Data from Unit Operations Generating General Metal-Bearing Wastewater

Pollutant Parameter	No. of Samples Analyzed	No. of Detects	Concentrations (mg/L)			
			Minimum	Maximum	Mean	Median
Priority Organic Pollutants						
1,2,4-Trichlorobenzene	57	1	0.109	0.109	0.109	0.109
2,4-Dimethylphenol	54	3	0.049	0.167	0.091	0.056
2,4-Dinitrophenol	50	4	0.065	335	83.7	0.123
2,4-Dinitrotoluene	57	1	23.4	23.4	23.4	23.4
2,6-Dinitrotoluene	57	2	0.605	6.98	3.79	3.79
2-Nitrophenol	56	4	0.034	2.15	0.574	0.059
4,6-Dinitro-o-Cresol	53	3	0.037	0.065	0.047	0.039
4-Nitrophenol	54	4	0.101	14.1	3.63	0.153
Acrolein	57	1	0.591	0.591	0.591	0.591
Benzene	57	4	0.015	0.225	0.069	0.019
Bis(2-Ethylhexyl) Phthalate	57	15	0.012	18.2	2.54	0.326
Bromodichloromethane	57	2	0.017	0.017	0.017	0.017
Chlorobenzene	57	4	0.011	1.56	0.402	0.018
Chloroform	57	6	0.012	0.218	0.050	0.017
Chloromethane	57	1	0.101	0.101	0.101	0.101
Di-n-butyl Phthalate	57	1	0.105	0.105	0.105	0.105
Di-n-octyl Phthalate	57	2	0.639	1.42	1.03	1.03
Dibromochloromethane	57	2	0.013	0.015	0.014	0.014
Ethylbenzene	57	3	0.020	0.030	0.024	0.021
Fluorene	57	1	0.016	0.016	0.016	0.016
Methylene Chloride	57	4	0.010	0.173	0.062	0.033
n-Nitrosodi-n-Propylamine	56	1	0.841	0.841	0.841	0.841
n-Nitrosodimethylamine	57	1	6.67	6.67	6.67	6.67
Naphthalene	57	3	0.024	0.208	0.103	0.077
Nitrobenzene	57	1	0.119	0.119	0.119	0.119
Phenanthrene	57	1	0.037	0.037	0.037	0.037
Phenol	57	8	0.020	1,044	136	0.538
Pyrene	57	1	0.016	0.016	0.016	0.016
Toluene	57	2	0.014	0.047	0.031	0.031
Trichloroethene	56	8	0.010	2.29	0.310	0.024

Table 5-12 (Continued)

Pollutant Parameter	No. of Samples Analyzed	No. of Detects	Concentrations (mg/L)			
			Minimum	Maximum	Mean	Median
Priority Metal Pollutants						
Antimony	147	66	0.002	3.56	0.326	0.066
Arsenic	147	65	0.001	16.4	0.843	0.057
Beryllium	147	38	0.0005	3.87	0.300	0.034
Cadmium	147	74	0.002	57,100	900	0.148
Chromium	147	115	0.007	108,000	1,951	1.57
Copper	147	135	0.007	141,000	2,552	4.26
Cyanide	8	7	0.027	4.30	0.751	0.143
Lead	147	79	0.010	7,150	178	2.48
Mercury	147	31	0.000	0.032	0.003	0.0008
Nickel	147	111	0.007	84,623	2,837	3.18
Selenium	147	36	0.001	8.00	0.551	0.036
Silver	147	50	0.004	14.4	0.572	0.097
Thallium	147	21	0.001	2.83	0.196	0.021
Zinc	146	133	0.005	53,200	1,121	2.84
Conventional Pollutants						
BOD 5-Day (Carbonaceous)	49	34	4.29	60,400	6,596	1,625
Oil And Grease	79	54	0.315	260	19.4	4.70
Oil And Grease (As HEM)	51	23	6.39	1,140	208	82.0
pH	56	56	0.010	14.4	7.50	8.53
Total Suspended Solids	143	124	5.00	110,000	1,742	115
Nonconventional Organic Pollutants						
1,2:3,4-Diepoxybutane	57	1	0.251	0.251	0.251	0.251
1,4-Dinitrobenzene	57	2	1.07	2.96	2.02	2.02
1,4-Dioxane	57	4	0.304	2.80	1.10	0.643
1-Bromo-2-Chlorobenzene	57	5	0.012	0.978	0.317	0.057
1-Bromo-3-Chlorobenzene	57	4	0.031	0.490	0.193	0.126
1-Methylfluorene	57	1	0.035	0.035	0.035	0.035
1-Methylphenanthrene	57	1	0.027	0.027	0.027	0.027
2-Butanone	57	15	0.070	26.1	3.84	1.05
2-Hexanone	57	1	5.02	5.02	5.02	5.02
2-Methylnaphthalene	57	2	0.067	0.220	0.143	0.143
2-Propanone	57	32	0.052	250	10.4	0.465
3,6-Dimethylphenanthrene	57	1	0.013	0.013	0.013	0.013
4-Methyl-2-Pentanone	57	8	0.052	2.78	0.565	0.128

Table 5-12 (Continued)

Pollutant Parameter	No. of Samples Analyzed	No. of Detects	Concentrations (mg/L)			
			Minimum	Maximum	Mean	Median
Nonconventional Organic Pollutants (continued)						
Alpha-Terpineol	56	1	1.40	1.40	1.40	1.40
Aniline	57	6	0.015	3.27	0.728	0.225
Benzoic Acid	57	11	0.051	8,098	754	1.109
Benzyl Alcohol	57	4	0.012	0.393	0.195	0.189
Carbon Disulfide	57	1	0.053	0.053	0.053	0.053
Dibenzofuran	57	1	0.140	0.140	0.140	0.140
Dibenzothiophene	57	1	0.011	0.011	0.011	0.011
Diphenylamine	57	1	0.032	0.032	0.032	0.032
Hexanoic Acid	57	6	0.012	31.5	9.08	5.02
Isobutyl Alcohol	57	1	0.012	0.012	0.012	0.012
m+p Xylene	42	1	0.059	0.059	0.059	0.059
m-Xylene	15	2	0.018	0.020	0.019	0.019
Methyl Methacrylate	57	5	0.012	0.797	0.471	0.586
n,n-Dimethylformamide	57	2	0.032	0.123	0.078	0.078
n-Decane	57	3	0.083	3.51	1.32	0.360
n-Docosane	57	2	0.021	0.051	0.036	0.036
n-Dodecane	57	2	0.024	1.27	0.648	0.648
n-Eicosane	57	2	0.020	0.956	0.488	0.488
n-Hexadecane	57	1	0.200	0.200	0.200	0.200
n-Nitrosomethylphenylamine	57	1	1.36	1.36	1.36	1.36
n-Nitrosomorpholine	57	1	0.040	0.040	0.040	0.040
n-Octadecane	57	1	0.132	0.132	0.132	0.132
n-Tetracosane	57	1	0.055	0.055	0.055	0.055
n-Tetradecane	57	2	0.044	0.114	0.079	0.079
o+p Xylene	15	2	0.010	0.910	0.460	0.460
o-Cresol	57	3	0.023	0.195	0.085	0.039
o-Toluidine	57	1	0.030	0.030	0.030	0.030
o-Xylene	42	1	0.048	0.048	0.048	0.048
p-Cresol	57	8	0.011	2.69	0.493	0.153
p-Nitroaniline	57	2	0.051	26.1	13.1	13.1
Resorcinol	57	2	1.24	4.12	2.68	2.68
Tripropyleneglycol Methyl Ether	57	7	0.245	100	33.5	20.1
Nonconventional Metal Pollutants						
Aluminum	147	116	0.027	34,900	1,283	3.84

Table 5-12 (Continued)

Pollutant Parameter	No. of Samples Analyzed	No. of Detects	Concentrations (mg/L)			
			Minimum	Maximum	Mean	Median
Nonconventional Metal Pollutants (continued)						
Barium	147	122	0.001	259	3.60	0.088
Boron	147	122	0.017	17800	561	0.858
Calcium	147	143	0.146	1,936	78.3	23.9
Cobalt	147	79	0.003	4700	67.3	0.530
Gold	1	1	0.392	0.392	0.392	0.392
Iron	147	135	0.008	374,000	5,892	3.66
Magnesium	147	124	0.085	960	66.8	14.6
Manganese	147	119	0.001	20,600	265	0.319
Molybdenum	147	89	0.006	197	5.38	0.205
Sodium	147	145	1.25	383,000	16,367	534.0
Tin	147	71	0.006	22,670	1,090	1.88
Titanium	147	97	0.002	13,250	223	0.177
Vanadium	147	71	0.004	1,495	25.5	0.062
Yttrium	147	30	0.001	2.11	0.171	0.038
Other Nonconventional Pollutants						
Acidity	74	45	2.00	600,000	106,486	39,600
Ammonia As Nitrogen	70	52	0.145	43,000	2,269	16.0
Chemical Oxygen Demand (COD)	82	77	6.90	600,000	32,696	4,700
Chloride	79	62	1.00	328,300	14,478	80.0
Fluoride	79	66	0.140	55,500	1,653	3.50
Hexavalent Chromium	52	9	0.008	0.430	0.090	0.025
Sulfate	107	90	2.40	755,000	35,877	275
Total Alkalinity	74	48	2.00	890,000	75,352	435
Total Dissolved Solids	143	141	87	1,000,000	114,066	23,900
Total Kjeldahl Nitrogen	61	52	0.480	40,000	3,158	53.8
Total Organic Carbon (TOC)	50	49	3.70	54,000	10,076	1,380
Total Petroleum Hydrocarbons (As SGT-HEM)	51	9	8.88	352	90.2	25.2
Total Phosphorus	34	25	0.020	11,000	809	7.50
Total Recoverable Phenolics	73	53	0.006	135	5.48	0.140
Total Sulfide	2	1	3.00	3.00	3.00	3.00

Source: MP&M sampling program.

Table 5-13

Analytical Data from Rinses Generating General Metal-Bearing Wastewater

Pollutant Parameter	No. of Samples Analyzed	No. of Detects	Concentrations (mg/L)			
			Minimum	Maximum	Mean	Median
Priority Organic Pollutants						
1,2-Diphenylhydrazine	113	1	0.096	0.096	0.096	0.096
1,4-Dichlorobenzene	113	1	0.013	0.013	0.013	0.013
Bis(2-Ethylhexyl) Phthalate	113	7	0.011	0.281	0.106	0.053
Bromodichloromethane	113	29	0.010	0.030	0.018	0.018
Chloroform	113	62	0.010	0.081	0.025	0.022
Chloromethane	113	2	0.051	0.102	0.076	0.076
Di-n-butyl Phthalate	113	4	0.157	0.190	0.176	0.178
Di-n-octyl Phthalate	113	1	0.013	0.013	0.013	0.013
Dibromochloromethane	113	24	0.010	0.026	0.016	0.016
Diethyl Phthalate	113	1	0.049	0.049	0.049	0.049
Methylene Chloride	113	1	0.011	0.011	0.011	0.011
Phenol	112	9	0.010	2.00	0.264	0.022
Trichloroethene	113	6	0.010	0.021	0.016	0.017
Priority Metal Pollutants						
Antimony	253	41	0.002	0.116	0.026	0.009
Arsenic	253	65	0.001	0.312	0.019	0.009
Beryllium	253	18	0.001	0.059	0.010	0.002
Cadmium	253	58	0.002	8,053	139	0.009
Chromium	253	144	0.005	21.8	1.06	0.102
Copper	253	227	0.003	560	16.2	0.201
Cyanide	14	11	0.020	135	28.3	0.830
Lead	253	64	0.002	56.6	1.72	0.099
Mercury	253	23	0.000	0.004	0.001	0.00048
Nickel	253	162	0.005	2,620	45.1	0.136
Selenium	253	39	0.001	0.072	0.011	0.003
Silver	253	49	0.005	7.20	0.325	0.012
Thallium	253	20	0.001	0.039	0.007	0.002
Zinc	253	188	0.002	13,700	127	0.142
Conventional Pollutants						
BOD 5-day (Carbonaceous)	112	50	1.07	873	83.0	11.6

Table 5-13 (Continued)

Pollutant Parameter	No. of Samples Analyzed	No. of Detects	Concentrations (mg/L)			
			Minimum	Maximum	Mean	Median
Conventional Pollutants (continued)						
Oil And Grease	86	59	0.295	91.0	9.36	3.80
Oil And Grease (As HEM)	117	28	6.23	800	58.3	10.9
pH	122	122	0.25	13.3	6.69	6.84
Total Suspended Solids	250	157	2.00	6,920	141	20.0
Nonconventional Organic Pollutants						
1,4-Dioxane	113	2	0.132	2.02	1.08	1.08
2-Butanone	113	12	0.066	0.550	0.195	0.124
2-Propanone	113	8	0.052	11.5	1.59	0.071
Benzoic Acid	113	4	0.126	4.31	1.63	1.05
Benzyl Alcohol	113	2	0.014	0.014	0.014	0.014
Carbon Disulfide	113	2	0.062	0.354	0.208	0.208
Dibenzofuran	113	1	0.010	0.010	0.010	0.010
Hexanoic Acid	113	3	0.013	0.332	0.147	0.096
n,n-dimethylformamide	113	5	0.025	0.115	0.045	0.028
n-decane	113	1	0.012	0.012	0.012	0.012
n-docosane	113	1	0.012	0.012	0.012	0.012
n-nitrosopiperidine	113	1	0.020	0.020	0.020	0.020
o-anisidine	113	1	0.025	0.025	0.025	0.025
p-cresol	113	6	0.014	0.063	0.038	0.040
Pentamethylbenzene	113	1	0.036	0.036	0.036	0.036
Safrole	113	1	0.085	0.085	0.085	0.085
Thianaphthene	113	1	0.010	0.010	0.010	0.010
Toluene, 2,4-Diamino-	113	1	6.56	6.56	6.56	6.56
Tripropyleneglycol Methyl Ether	113	1	8.48	8.48	8.48	8.48
Nonconventional Metal Pollutants						
Aluminum	253	182	0.022	321	5.85	0.214
Barium	253	208	0.0007	2.90	0.065	0.036
Boron	253	187	0.012	363	5.34	0.193
Calcium	253	245	0.033	361	32.9	23.9
Cobalt	253	53	0.003	11.0	0.744	0.032
Iron	253	193	0.003	2,810	40.1	0.323
Magnesium	253	229	0.078	130	10.4	8.59
Manganese	253	163	0.001	135	3.33	0.027
Molybdenum	253	68	0.003	13.4	0.414	0.022

Table 5-13 (Continued)

Pollutant Parameter	No. of Samples Analyzed	No. of Detects	Concentrations (mg/L)			
			Minimum	Maximum	Mean	Median
Nonconventional Metal Pollutants (continued)						
Sodium	253	249	0.277	85,300	1,179	63.3
Tin	253	73	0.005	6,070	103	0.067
Titanium	253	90	0.002	18.1	0.879	0.014
Vanadium	253	31	0.004	1.10	0.142	0.016
Yttrium	253	15	0.001	0.870	0.066	0.003
Other Nonconventional Pollutants						
Acidity	77	50	1.00	90,100	3,397	115
Amenable Cyanide	5	5	0.830	135	60.7	61.5
Ammonia as Nitrogen	104	51	0.100	729	29.9	2.39
Chemical Oxygen Demand (COD)	140	113	5.20	73,000	1,041	49.0
Chloride	84	83	1.20	20,000	452	30.0
Fluoride	85	71	0.180	60.0	3.58	1.00
Hexavalent Chromium	117	22	0.011	0.590	0.054	0.020
Sulfate	149	143	2.33	28,400	534	58.8
Total Alkalinity	75	57	8.00	8,600	507	72.0
Total Dissolved Solids	250	250	20.0	260,000	3,799	629
Total Kjeldahl Nitrogen	102	56	0.10	6,720	151	8.07
Total Organic Carbon (TOC)	112	101	1.16	5,800	195	10.7
Total Petroleum Hydrocarbons (As SGT-HEM)	117	13	5.25	316	43.3	9.52
Total Phosphorus	36	26	0.026	720	54.0	6.65
Total Recoverable Phenolics	132	53	0.005	2.85	0.083	0.012
Weak-acid Dissociable Cyanide	3	3	52.9	140	108	131

Source: MP&M sampling data.

5.5.2 General Metal-Bearing Raw Wastewater Characteristics

Typically, MP&M facilities with well-designed treatment systems segregate their waste streams by type and treat them in preliminary treatment units designed to treat the particular characteristic as discussed in Sections 5.1 through 5.4. After preliminary treatment, MP&M facilities typically commingle the wastewater with general process wastewater generated from the unit operations described in Section 5.5.1 and treat it in an end-of-pipe treatment system. Generally, the end-of-pipe treatment consists of chemical precipitation and sedimentation. Where high concentrations of metals are present in the wastewater, facilities may employ preliminary batch chemical precipitation and sedimentation to ensure that the high concentrations will not

cause a process upset to the end-of-pipe treatment system. Section 8.2.2 discusses metal-bearing wastewater treatment technologies used in the MP&M industry. Table 5-14 summarizes the data obtained from sampling the influent to end-of-pipe chemical precipitation systems. (See Section 10.0 for a discussion of achievable effluent concentrations following chemical precipitation.)

Table 5-14

Analytical Data for General Metal-Bearing Treatment Influent Wastewater Streams

Pollutant Parameter	No. of Samples Analyzed	No. of Detects	Concentrations (mg/L)			
			Minimum	Maximum	Mean	Median
Priority Organic Pollutants						
1,1,1-Trichloroethane	137	6	0.019	0.084	0.053	0.053
1,1,2,2-Tetrachloroethane	137	1	12.1	12.1	12.1	12.1
1,1-Dichloroethene	137	2	0.011	0.748	0.379	0.379
4-Chloro-3-Methylphenol	136	9	0.011	1.14	0.183	0.076
Anthracene	137	1	0.104	0.104	0.104	0.104
Benzene	137	1	0.025	0.025	0.025	0.025
Bis(2-Chloroethyl) Ether	137	1	0.016	0.016	0.016	0.016
Bis(2-Ethylhexyl) Phthalate	137	20	0.008	0.298	0.051	0.014
Bromodichloromethane	137	14	0.011	0.143	0.026	0.016
Butyl Benzyl Phthalate	137	2	0.009	0.010	0.009	0.009
Chloroform	137	63	0.010	0.824	0.102	0.032
Chloromethane	137	1	0.011	0.011	0.011	0.011
Di-n-butyl Phthalate	137	3	0.007	0.066	0.044	0.058
Di-n-octyl Phthalate	137	1	0.012	0.012	0.012	0.012
Dibromochloromethane	137	6	0.014	0.065	0.024	0.016
Diethyl Phthalate	134	1	0.038	0.038	0.038	0.038
Ethylbenzene	137	5	0.006	0.335	0.074	0.010
Fluorene	137	1	0.045	0.045	0.045	0.045
Methylene Chloride	137	10	0.008	0.172	0.043	0.023
Naphthalene	137	3	0.012	0.054	0.035	0.038
Phenanthrene	137	3	0.041	0.112	0.071	0.060
Phenol	139	19	0.016	0.634	0.099	0.029
Tetrachloroethene	137	8	0.015	1.11	0.306	0.081
Toluene	137	6	0.009	2.77	0.533	0.019
Trichloroethene	137	3	0.019	0.023	0.021	0.021
Priority Metal Pollutants						
Antimony	219	77	0.002	1.13	0.062	0.019
Arsenic	223	88	0.001	0.530	0.026	0.009
Beryllium	223	62	0.0002	3.23	0.235	0.004
Cadmium	223	113	0.001	323	6.26	0.065

Table 5-14 (Continued)

Pollutant Parameter	No. of Samples Analyzed	No. of Detects	Concentrations (mg/L)			
			Minimum	Maximum	Mean	Median
Priority Metal Pollutants (continued)						
Chromium	223	213	0.012	1,350	15.1	1.27
Copper	223	221	0.013	344	16.3	1.08
Lead	223	149	0.002	159	3.44	0.176
Mercury	221	48	0.00003	0.012	0.0009	0.0003
Nickel	223	215	0.012	2,101	30.5	1.52
Selenium	219	35	0.001	0.090	0.019	0.007
Silver	223	134	0.005	4.23	0.401	0.046
Thallium	219	24	0.001	0.112	0.011	0.002
Zinc	223	212	0.009	1,540	17.8	0.945
Conventional Pollutants						
BOD 5-Day (Carbonaceous)	133	86	2.40	609	64.4	26.0
Oil And Grease (as HEM)	205	133	0.570	32,000	507	11.9
Total Suspended Solids	222	202	4.00	8,920	569	96.8
Nonconventional Organic Pollutants						
1 4-Dioxane	132	2	0.033	0.118	0.0755	0.0755
1-Methylfluorene	132	2	0.111	0.189	0.150	0.150
1-Methylphenanthrene	132	2	0.092	0.181	0.136	0.136
2-Butanone	132	8	0.056	2.45	0.481	0.079
2-Methylnaphthalene	132	2	0.076	0.205	0.140	0.140
2-Propanone	132	74	0.051	16.7	0.952	0.151
3,6-Dimethylphenanthrene	132	2	0.019	0.062	0.041	0.041
4-Methyl-2-Pentanone	132	10	0.120	1.36	0.308	0.181
Acetophenone	132	1	0.073	0.073	0.073	0.073
Alpha-Terpineol	132	5	0.013	0.087	0.051	0.054
Aniline	132	1	0.013	0.013	0.013	0.013
Benzoic Acid	132	45	0.053	46.8	1.38	0.224
Benzyl Alcohol	132	8	0.011	0.145	0.039	0.015
Beta-Naphthylamine	130	1	0.104	0.104	0.104	0.104
Biphenyl	132	1	0.011	0.011	0.011	0.011
Carbon Disulfide	132	10	0.016	3.92	0.505	0.058
Dibenzothiophene	132	2	0.015	0.025	0.020	0.020
Diphenylamine	132	1	0.033	0.033	0.033	0.033
Hexanoic Acid	132	21	0.010	0.461	0.056	0.017
m-xylene	71	1	0.016	0.016	0.016	0.016

Table 5-14 (Continued)

Pollutant Parameter	No. of Samples Analyzed	No. of Detects	Concentrations (mg/L)			
			Minimum	Maximum	Mean	Median
Nonconventional Organic Pollutants (continued)						
Methyl Methacrylate	132	1	0.019	0.019	0.019	0.019
n,n-dimethylformamide	132	8	0.012	0.581	0.093	0.016
n-decane	132	1	0.031	0.031	0.031	0.031
n-docosane	132	2	0.013	0.026	0.019	0.019
n-dodecane	132	7	0.044	0.772	0.243	0.088
n-eicosane	132	9	0.014	0.181	0.043	0.020
n-hexacosane	132	6	0.022	0.037	0.033	0.034
n-hexadecane	132	13	0.010	0.631	0.127	0.061
n-nitrosomethylethylamine	132	2	0.019	0.023	0.021	0.021
n-nitrosomorpholine	132	2	0.011	0.028	0.020	0.020
n-octacosane	132	2	0.035	0.036	0.036	0.036
n-octadecane	132	19	0.011	0.493	0.090	0.027
n-tetracosane	132	4	0.012	0.021	0.017	0.018
n-tetradecane	132	10	0.017	1.01	0.227	0.104
n-triacontane	132	2	0.015	0.031	0.023	0.023
o+p-xylene	71	3	0.013	0.023	0.017	0.014
o-toluidine	132	1	0.013	0.013	0.013	0.013
p-chloroaniline	132	1	0.098	0.098	0.098	0.098
p-cresol	132	10	0.013	0.030	0.019	0.017
p-cymene	132	3	0.015	0.054	0.030	0.020
Styrene	132	5	0.013	0.188	0.057	0.025
Trichlorofluoromethane	137	7	0.025	0.109	0.042	0.032
Tripropyleneglycol Methyl Ether	132	23	0.064	5.21	1.83	1.05
Nonconventional Metal Pollutants						
Aluminum	223	212	0.055	571	11.1	2.85
Barium	223	198	0.010	9.91	0.201	0.069
Boron	212	198	0.057	206	4.14	0.746
Calcium	223	223	4.77	832	74.1	37.8
Cobalt	223	95	0.002	25.8	0.924	0.021
Gold	20	10	0.013	0.150	0.056	0.038
Iron	223	223	0.061	3,880	102	4.96
Magnesium	223	218	0.349	3,360	88.7	10.3
Manganese	223	222	0.004	47.3	1.47	0.2315
Molybdenum	223	149	0.003	3.06	0.253	0.039

Table 5-14 (Continued)

Pollutant Parameter	No. of Samples Analyzed	No. of Detects	Concentrations (mg/L)			
			Minimum	Maximum	Mean	Median
Nonconventional Metal Pollutants (continued)						
Palladium	10	8	0.053	0.229	0.114	0.085
Sodium	223	223	20.1	9,600	471	216
Tin	212	137	0.004	75.3	4.85	0.189
Titanium	212	155	0.002	76.4	1.85	0.052
Vanadium	223	58	0.0016	1.19	0.067	0.014
Yttrium	212	57	0.00084	0.085	0.010	0.003
Other Nonconventional Pollutants						
Acidity	73	54	7.00	24,770	1,862	140
Amenable Cyanide	7	5	0.012	0.129	0.085	0.092
Ammonia As Nitrogen	91	88	0.040	320	19.3	2.56
Chemical Oxygen Demand (COD)	205	196	1.50	13,000	541	122
Chloride	80	77	4.50	9,500	410	140
Fluoride	80	79	0.130	100	4.49	1.55
Hexavalent Chromium	133	50	0.010	21.0	0.771	0.060
Sulfate	136	130	18.0	19,000	586	268
Total Alkalinity	74	47	2.39	510	126	96.0
Total Dissolved Solids	222	222	19.0	34,000	2,426	1,030
Total Kjeldahl Nitrogen	85	82	0.110	160	14.9	6.69
Total Organic Carbon (TOC)	128	99	3.57	394	59.9	32.3
Total Petroleum Hydrocarbon (As SGT-HEM)	133	49	5.00	93.0	21.2	10.3
Total Phosphorus	86	84	0.020	525	30.3	5.2
Total Recoverable Phenolics	189	110	0.006	13.0	0.387	0.047
Total Sulfide	28	2	2.00	4.00	3.00	3.00

Source: MP&M sampling program.

6.0 INDUSTRY SUBCATEGORIZATION

This section discusses the subcategorization of the MP&M Point Source Category. Section 6.1 discusses the methodology and factors considered when determining the subcategories and Section 6.2 describes facilities in each subcategory.

6.1 Methodology and Factors Considered for Basis of Subcategorization

To provide a method for addressing variations between products, raw materials processed, and other factors that result in distinctly different effluent characteristics, EPA divided the MP&M Point Source Category into groupings called "subcategories." Each subcategory has a uniform set of effluent limitations that take into account technological achievability and economic impacts unique to that subcategory. The Clean Water Act (CWA) requires EPA, in developing effluent limitations guidelines and pretreatment standards, to consider a number of different subcategorization factors. The statute also authorizes EPA to take into account other factors the Agency deems appropriate. EPA considered the following factors in its evaluation of potential MP&M subcategories:

- Unit operation;
- Activity;
- Raw materials;
- Products;
- Size of site;
- Geographic location;
- Facility age;
- Nature of the waste generated;
- Economic impacts;
- Treatment costs;
- Total energy requirements;
- Air pollution control methods;
- Solid waste generation and disposal; and
- Publicly Owned Treatment Works (POTW) burden.

As a result, EPA has determined that a basis exists for dividing the MP&M category into the following subcategories for the proposed rule, as shown in Table 6-1.

Table 6-1

Proposed Subcategories

Facilities that Generate Metal-Bearing Wastewater (With or Without Oil-Bearing Wastewater)	Facilities that Generate Only Oil-Bearing Wastewater
General Metals	Oily Wastes
Metal Finishing Job Shops	Railroad Line Maintenance
Non-Chromium Anodizing	Shipbuilding Dry Dock
Printed Wiring Board	
Steel Forming and Finishing	

6.1.1 Factors Contributing to Subcategorization

EPA found two basic types of waste streams in the industry: 1) wastewater with high metals content (metal-bearing), and 2) wastewater with low concentration of metals, and high oil and grease content (oil-bearing). The type of wastewater a facility generates is directly related to the unit operations it performs. For example, unit operations such as machining, grinding, aqueous degreasing, and impact or pressure deformation tend to generate a wastewater with high oil and grease (and associated organic pollutants) loadings but relatively lower concentrations of metal pollutants. Other unit operations such as electroplating, conversion coating, chemical etching and milling, and anodizing generate higher metals loadings with moderate or low oil and grease concentrations or generate wastewater containing both metals and oil and grease.

Although many facilities generate both metal- and oil-bearing wastewater, a large number of facilities, typically machine shops and maintenance and repair facilities, only generate oil-bearing wastewater. Since the wastewater at these facilities primarily contains oil and grease and other organic constituents, these facilities use treatment technologies that focus on oil removal only and do not include the chemical precipitation step needed to treat metal-bearing wastewater. These treatment technologies generally include ultrafiltration, or chemical emulsion breaking followed by either gravity flotation, coalescing plate oil/water separators, or dissolved air flotation (DAF). Therefore, EPA first divided the industry on the basis of unit operations performed and the nature of the wastewater generated, resulting in the following two groups: (1) metal-bearing with or without oily and organic constituents group; and (2) oil-bearing only group. EPA then performed an analysis to identify any significant differences in the subcategorization factors within the two basic groups. Section 6.2.6 identifies the unit operations that EPA believes to generate only oil-bearing wastewater to generate metal-bearing wastewater. EPA considers MP&M facilities that perform MP&M unit operations other than those mentioned in Section 6.2.6 to generate metal-bearing wastewater.

Metal-Bearing Wastewater (With or Without Oil-Bearing Wastewater)

When looking at facilities generating metal-bearing wastewater (with or without oil-bearing wastewater), EPA identified five groups of facilities that could potentially be subcategorized by dominant product, raw materials used, and/or nature of the waste generated. In two groups, EPA also considered economic impacts as a factor in subcategorization because of the reduced ability of these facilities to afford treatment costs. Within the group of facilities with metal bearing wastewater EPA also identified one group where the number of facilities not currently covered by an existing effluent guidelines regulation was large enough to present an unacceptable burden to POTWs.

Based on the currently available data, EPA divided the metal-bearing (with or without oil-bearing wastewater) MP&M facilities into the following subcategories: non-chromium anodizing facilities; metal finishing job shops; printed wiring board facilities; steel forming and finishing facilities; and general metals facilities. EPA describes its rationale for subcategorizing each of these groups below (see Section 6.2 for additional detailed discussion and applicability).

The non-chromium anodizers differ from other MP&M facilities in that all of their products are primarily of one metal type, anodized aluminum, and most importantly, they do not use chromic acid, dichromate sealants, or other process solutions containing significant concentrations of chromium in their anodizing process. Based on EPA's limited data for these facilities, the Agency expects that these facilities have very low levels of metals (with the exception of aluminum) or toxic organic pollutants in their wastewater discharges. EPA determined that other MP&M facilities had much greater concentrations of a wider variety of metals. Table 6-2 illustrates this point by providing the percentage of facilities using multiple metal types by subcategory.

Table 6-2

Percentage of Facilities Using Multiple Metal Types by Subcategory

Proposed Subcategory	Number of Metal Types Processed						
	0	**1**	**2**	**3**	**4**	**5-10**	**>10**
Shipbuilding Dry Docks	0	0	25	50	0	25	0
General Metals	0	51	23	13	4	10	0
Steel Forming and Finishing	0	55	25	14	3	3	0
Metal Finishing Job Shop	0	7	24	23	4	41	1
Non-Chromium Anodizer	0	76	24	0	0	0	0
Oily Wastes	32	13	53	1	<1	0	0
Printed Wiring Boards	0	1	0	49	9	40	1
Railroad Line Maintenance	<1	98	1	<1	0	0	0

Source: MP&M Survey Database

In addition, non-chromium anodizing facilities require much larger wastewater treatment systems than other metal-bearing MP&M facilities to remove the large amounts of aluminum and low levels of alloy metals generated in their wastewater. The need for larger treatment systems results in higher costs and large economic impacts for this proposed subcategory. EPA found that as many as 60 percent of the non-chromium anodizers could close as a result of complying with the regulatory options considered.

Therefore, based on the difference in raw materials used, product produced, nature of the waste generated (i.e., low levels of pollutants discharged), treatment costs, and projected economic impacts, EPA concluded that a basis exists for subcategorizing the non-chromium anodizing facilities in the MP&M industry.

EPA investigated whether to subcategorize the metal finishing and electroplating job shops covered currently by the metal finishing (40 CFR 433) and electroplating (40 CFR 413) effluent guidelines. Although these facilities have metal types that require the same treatment technologies as many other metal-bearing facilities, EPA determined that they can be different due to the variability of their raw materials and products as well as the slightly higher economic impacts incurred as compared to other MP&M facilities. As discussed in Section 6.2, this subcategory includes only those facilities that perform the six operations defining the applicability of the metal finishing and electroplating effluent guidelines and that are “job shops” as defined in the metal finishing effluent guidelines (i.e., they own less than 50 percent of the products processed on site on an annual area basis).

Because these facilities are job shops and work on a contract basis, they cannot always predict the type of plating or other finishing operations required. In addition, because these facilities work on a large variety of metal types from various customers, their wastewater characteristics can vary from week to week (or even day to day). Table 6-2 demonstrates the variety of metal types processed at metal finishing job shops as compared to the rest of the industry. (Note that shipbuilding dry docks and printed wiring board facilities also process a wide variety of metal types. EPA also chose to subcategorize these groups for reasons discussed below.) EPA performed sampling to specifically identify the variability in the wastewater generated at metal finishing job shops, and found that the variability factors calculated solely on the analytical wastewater sampling data from metal finishing and electroplating job shops are higher for most pollutant parameters than those calculated for similar metal-bearing subcategories (e.g., General Metals) (see Section 10.1 for a discussion of EPA's job shop variability wastewater sampling and Section 10.3 for a discussion on determining limits and variability factors). In addition, EPA found that up to 10 percent of the indirect discharging metal finishing job shops could close as a result of compliance with the proposed regulation. Therefore, EPA concluded that it has an appropriate basis for subcategorizing metal finishing and electroplating job shops.

EPA determined that there is a basis for subcategorizing the printed wiring board facilities based on raw materials, unit operations performed, primary product, and nature of the waste generated. First, as shown in Table 6-3, these facilities process a more consistent mix of metal types (primarily copper, tin, and lead) than other metal-bearing wastewater generating MP&M facilities. EPA concluded that this consistent mix of metal types enables printed wiring board facilities to tailor their treatment technology and incorporate more of the advanced pollution prevention and recovery technologies (e.g., ion exchange).

Table 6-3

Percentage of MP&M Facilities by Subcategory Using Each Metal Type

Metal	Subcategory							
	Shipbuilding Dry Docks	General Metals	Steel Forming and Finishing	Metal Finishing Job Shop	Non-Chromium Anodizer	Oily Wastes	Printed Wiring Boards	Railroad Line Maintenance
Aluminum	25	38	3	60	88	46	6	1
Beryllium	0	0	0	1	0	0	0	0
Cadmium	25	1	3	11	0	0	0	0
Chromium	50	6	11	27	0	1	3	0
Cobalt	0	3	3	0	0	1	1	0
Copper	75	28	10	53	0	12	99	6
Gold	0	4	0	14	0	0	82	0
Indium	0	0	0	0	0	0	0	0
Iron	100	82	100	87	36	86	11	100
Lead	0	4	1	9	0	1	94	6
Magnesium	0	2	0	5	0	2	0	0
Manganese	0	0	0	0	0	0	2	0
Molybdenum	25	0	0	0	0	0	6	0
Nickel	75	13	5	53	0	6	82	0
Palladium	0	1	0	0	0	0	7	0
Platinum	0	0	0	1	0	0	0	0
Rhodium	0	0	0	6	0	0	1	0
Ruthenium	0	0	0	0	0	0	1	0
Selenium	0	0	0	0	0	0	0	0
Silver	25	2	0	16	0	0	11	0
Tantalum	0	1	0	0	0	0	0	0
Tin	0	11	5	30	0	0	97	0
Titanium	0	3	3	3	0	1	0	0
Tungsten	0	1	0	0	0	1	0	0
Yttrium	0	0	0	1	0	0	8	0
Zinc	25	14	30	54	0	1	3	0
Zirconium	0	0	0	0	0	0	0	0

Source: MP&M Survey Database

Printed wiring board facilities generally work with copper-clad laminate material, allowing them to target copper for removal in their wastewater treatment systems or recover the copper using in-process ion exchange. Second, these facilities apply, develop, and strip photo resist - a set of unit operations that is unique to this subcategory. This process produces a higher concentration of a more consistent group of organic constituents than other facilities in the metal-bearing group. Finally, the nature of the wastewater generated at these facilities may also be different because these facilities perform more lead-bearing operations (e.g., lead/tin electroplating, wave soldering) than other MP&M facilities.

Steel forming and finishing is another proposed subcategory under the metal- bearing group of MP&M facilities. These facilities perform both cold forming and finishing operations on steel at stand-alone facilities as well as at steel manufacturing facilities. EPA formerly covered these facilities under the 1982 Iron and Steel Manufacturing effluent guidelines (40 CFR Part 420). Typical operations include: acid pickling, annealing, conversion coating (e.g., zinc phosphate, copper sulfate), hot dip coating and/or electroplating of steel wire or rod, heat treatment, welding, drawing, patenting, and oil tempering. EPA concluded that the basis for subcategorization is the difference in the raw material and primary product at these facilities. Facilities in this subcategory primarily process steel and, for the most part, produce uniformly shaped products such as wire, rod, bar, pipe, and tube. In addition, this is the only subcategory for which EPA is proposing to cover forming operations under the MP&M regulations. Effluent guidelines specific to forming operations exist for all other common metal types (e.g., Aluminum Forming (40 CFR Part 467); Copper Forming (40 CFR Part 468); and Nonferrous Metals Forming & Metal Powders (40 CFR Part 471)).

After subcategorizing non-chromium anodizing facilities, metal finishing job shops, printed wiring board facilities, and steel forming and finishing facilities, EPA is proposing to group the remaining metal-bearing wastewater generating MP&M facilities into a subcategory entitled “General Metals.” This subcategory would be a “catch-all” for metal-bearing wastewater generating facilities that do not fall into any of the previous subcategories. For example, wastewater generated from most manufacturing operations and heavy rebuilding operations (e.g., aircraft, aerospace, auto, bus/truck, railroad) would be regulated under the proposed General Metals subcategory. Whereas all facilities in the other four metal-bearing subcategories are currently covered by existing effluent guidelines, only 16 percent of General Metals facilities are covered by 433/413 (with another 10 percent having some waste streams covered by other metals, effluent guidelines). This means that over 25,000 MP&M facilities in this subcategory would require new permits (i.e. control mechanisms). EPA recognizes that this would create a very large burden on POTWs. Therefore, in determining a proposed option for the General Metals Subcategory, EPA considered the POTW permitting burden associated with proposing pretreatment standards for over 25,000 facilities (See Section 14.0).

Oil-Bearing Only Group

When evaluating facilities with only oil-bearing wastewater for potential further subcategorization, EPA identified two types of facilities that were different from the other facilities in

that group based on size, location, and dominant product or activity. The first type of facility is railroad line maintenance facilities, and the second performs MP&M operations in shipbuilding dry docks or similar structures (see Section 6.2.7 and 6.2.8, respectively, for detailed descriptions of these proposed subcategories).

Railroad line maintenance facilities perform outdoor light maintenance and cleaning of railroad cars, engines, and wheel trucks. EPA concluded that there is a basis to subcategorize railroad line maintenance facilities due to their outdoor location, unit operations performed, and low level of pollutant loadings discharged to the environment. Unit operations typically performed at railroad line maintenance facilities include: abrasive blasting, alkaline cleaning for oil removal, aqueous degreasing, assembly/disassembly, floor cleaning, washing finished products, welding, and collection of storm water. EPA notes that this proposed subcategory does not include railroad manufacturing facilities or railroad overhaul/rebuilding facilities.

The second type of facility is dry docks (and similar structures such as graving docks, building ways, lift barges, and marine railways): large, outdoor areas, exposed to precipitation, where shipyards perform final assembly, maintenance, rebuilding, and repair work on large ships and boats. EPA believes that a basis exists to subcategorize shipbuilding dry docks and similar structures due to their size, outdoor location, low level of pollutant loadings discharged to the environment, and the fact this wastewater is unique to the shipbuilding industry. This proposed subcategory does not include other MP&M operations that occur at shipyards (e.g., shore-side operations).

The facilities that generate only oil-bearing wastewater but are not dry docks or railroad line maintenance facilities fall into the Oily Wastes Subcategory. These facilities discharge only oil-bearing wastewater and perform only one or more of the unit operations listed in Table 6-4 below.

Table 6-4

Unit Operations Performed by Oily Wastes Facilities

Alkaline Cleaning for Oil Removal	Machining
Aqueous Degreasing	Pressure Deformation
Corrosion Preventive Coating	Solvent Degreasing
Floor Cleaning	Testing (e.g., Hydrostatic, Dye Penetrant, Ultrasonic, Magnetic Flux)
Grinding	Painting
Heat Treating	Steam Cleaning
Impact Deformation	Laundering

Therefore, EPA divided the facilities in the MP&M industry that generate only oil-bearing wastewater into the following three subcategories: (1) railroad line maintenance facilities; and (2) shipbuilding dry docks (and similar structures); (3) oily waste facilities. Following further analysis, EPA decided not to propose pretreatment standards for indirect dischargers in the railroad line maintenance and shipbuilding dry dock subcategories and proposed a low flow cutoff of 2 million gallons per year for indirect dischargers in the Oily Wastes Subcategory. (see Section 14.8 for a discussion pertaining to pretreatment standards).

6.1.2 Factors That are not a Basis for MP&M Subcategorization

EPA examined the other factors listed earlier in this section for possible basis of subcategorization. The Agency determined that there is no basis for subcategorizing the MP&M industry based on the following factors: geographic location, age of facilities, total energy requirements, air pollution control methods, and solid waste generation and disposal. These factors are discussed below. In addition, EPA also considered subcategorizing the MP&M industry according to the 18 industrial sectors listed in Section 2.2.5. As discussed in Section 6.1.1, and further discussed below, EPA determined that subcategorization based on sectors was appropriate for only one sector (printed wiring board), and for portions of three other sectors (railroad, ships and boats, and job shops).

Geographic Location

MP&M sites are located throughout the United States. Sites are not limited to any one geographical location, but approximately half are located east of the Mississippi, with additional concentrations of sites in Texas, Colorado, and California. EPA did not subcategorize based on geographic location because location does not affect the ability of sites to comply with the MP&M rule.

Geographic location may impact costs if additional land is required to install treatment systems, since the cost of the land will vary depending on whether the site is located in an urban or rural location. However, the treatment systems used to treat MP&M wastewater typically do not have large land requirements, as demonstrated by the fact that many MP&M sites are located in urban settings.

Water availability is another function of geographical location. Limited water supply encourages efficient use of water. The Agency encourages installing water recycle and reuse practices. The proposed treatment options for all subcategories include pollution prevention and water conservation because these practices tend to reduce treatment costs and improve pollutant removals.

Facility Age

The percentage of water-discharging facilities by the decade in which they were built is shown in Figure 6-1. This information is based upon responses to MP&M surveys that reported the date the facility was built.

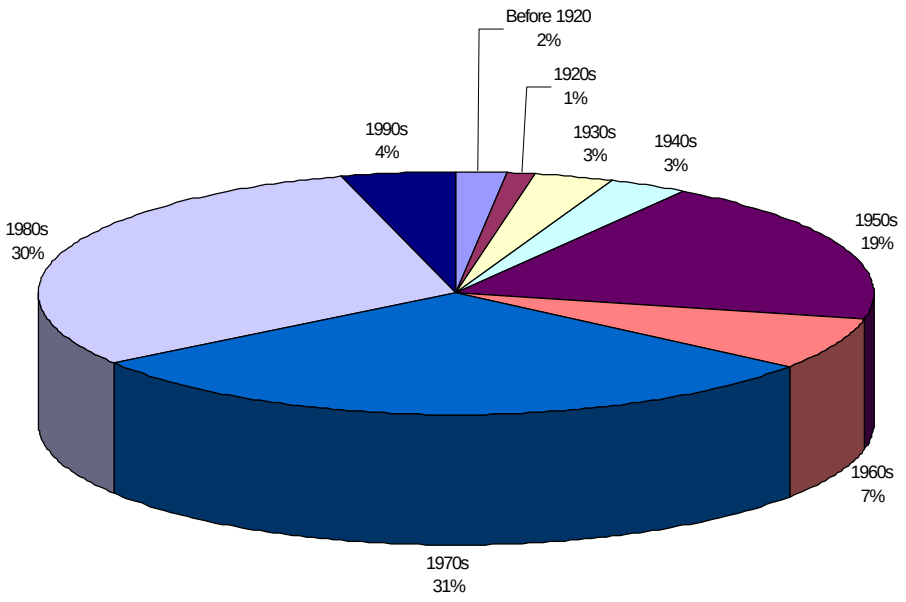

Source: MP&M Survey Database.
Note: MP&M surveys were mailed in 1991 and 1996. There are 62,749 wastewater-discharging MP&M sites.

Figure 6-1. Percentage of Wastewater-Discharging Facilities by Decade Built

Most sites have been built since 1970. Although the survey respondents reported a wide range of ages, these sites must be continually modernized to remain competitive. Most of the sites EPA visited during the MP&M site visit program had recently modernized some area of their site. Modernizing production processes and air pollution control equipment results in generation of similar wastes among all sites of various ages. Therefore, EPA did not select facility age as a basis for subcategorization.

Total Energy Requirements

EPA did not select total energy requirements as a basis for subcategorization because EPA does not expect energy requirements to vary widely on a production normalized basis. The subcategorization scheme that EPA is proposing should account for any variations in energy requirements (e.g., differences in treatment system energy requirements for metal-bearing streams versus oily waste streams). The estimated impacts of this regulation on energy consumption in the

United States is an energy increase of approximately 0.01 percent (see Section 13.0). EPA estimated the energy requirements associated with each MP&M technology option and considered these in estimating compliance costs (see Section 11.0).

Air Pollution Control Methods

Many sites control air emissions using wet air pollution control units that affect the wastewater flow rate from the site. However, based on data collected during the MP&M sampling program, wastewater generated by these devices does not affect the effectiveness of technologies used to control MP&M wastewater pollutant loadings. EPA considers wet air pollution control units additional unit operations within the MP&M category, but not as a basis of subcategorizing the category.

Industrial Sectors

EPA considered subcategorizing the MP&M category by industrial sector (e.g., aerospace, aircraft, bus and truck, electronic equipment, hardware, household equipment, instruments, job shops, mobile industrial equipment, motor vehicles, office machines, ordnance, precious metals and jewelry, printed wiring boards, railroad, ships and boats, stationary industrial equipment, and miscellaneous metal products). Sectors are broadly defined and not only include manufacturing and repair facilities within the sector (e.g., shipbuilding facilities in the ship and boat sector), but also include facilities that produce products that are used within the sector (e.g., a facility that manufactures hydraulic pumps used on ships is also in the ship and boat sector). The Agency determined that subcategorization based solely on industrial sector would require much more detailed subcategorization scheme than the approach proposed (see below). Adopting a subcategorization scheme based on industrial sector would complicate the implementation of the limitations and standards because permit writers might be required to develop facility-specific limitations across multiple subcategories.

The Agency determined that wastewater characteristics, unit operations, and raw materials used to produce products within a given sector are not always the same from site to site, and they are not always different from sector to sector. Within each sector, sites can perform a variety of unit operations on a variety of raw materials. For example, a site in the aerospace sector may primarily machine aluminum missile components and not perform any surface treatment other than alkaline cleaning. Another site in that sector may electroplate iron parts for missiles and perform little or no machining. Wastewater characteristics from these sites may differ because of the different unit operations performed and different raw materials used.

Based on the analytical data collected for this rule, EPA has not found a statistically significant difference in industrial wastewater discharge among industrial sectors when performing similar unit operations for cadmium, chromium, copper, cyanide, lead, manganese, molybdenum, nickel, oil & grease, silver, tin, TSS, and zinc. (The analytical data are available in the public record for this rulemaking.) For example, a facility that performs electroplating in the process of manufacturing office

machines produces metal-bearing wastewater with similar chemical characteristics as a facility that performs electroplating in the process of manufacturing a part for a bus. Similarly, a facility that performs repair and maintenance on a airplane engine produces oil-bearing wastewater that has similar chemical characteristics to a facility that performs repair and maintenance on construction machinery.

Most MP&M unit operations are not unique to a particular sector and are performed across all sectors. For example, all sectors may perform several of the major wastewater-generating unit operations (e.g., alkaline treatment, acid treatment, machining, electroplating). And, for the most part, the unit operations that are rarely performed (e.g., abrasive jet machining) are not performed in all sectors, but are also not limited to a single sector. Therefore, a facility in any one of the 18 industrial sectors can generate metal-bearing or oil-bearing wastewater (or a combination of both) depending on what unit operations the facility performs.

In addition, two facilities that may be part of the same sector may generate wastewater with vastly different chemical characteristics and thus require different types of treatment. For example, an automobile manufacturer and an automobile repair facility are both part of the motor vehicle sector. However, the automobile manufacturer may perform unit operations that generate metal-bearing and oil-bearing wastewater (aqueous degreasing, electroplating, chemical conversion coating, etc.) while the automobile repair facility may perform unit operations that only generate oil-bearing wastewater (machining, aqueous degreasing, impact deformation, painting, etc.).

Due to the numerous MP&M facilities that could fall under the scope of multiple sectors, EPA determined that a regulation based on MP&M industrial sector would create a variety of implementation issues for State and local regulators as well as for those multiple-sector facilities. Therefore, as mentioned above, EPA is not proposing to use industrial sector to subcategorize the industry.

After dividing facilities in the MP&M industry according to the unit operations performed (metal-bearing or oil-bearing operations), EPA concluded that raw wastewater has similar treatability across all of the MP&M sectors. Therefore, a facility that performs electroplating in the process of manufacturing office machines produces metal-bearing wastewater with similar chemical characteristics as a facility that performs electroplating in the process of manufacturing a part for a bus. Similarly, a facility that performs repair and maintenance on an airplane engine produces oil-bearing wastewater that has similar chemical characteristics to a facility that performs repair and maintenance on construction machinery.

Solid Waste Generation and Disposal

Physical and chemical characteristics of solid waste generated by the MP&M category are determined by the raw materials, unit operations, and types of air pollution control in use. Therefore, this factor does not provide a primary basis for subcategorization. The subcategorization scheme that EPA is proposing should account for any variations in solid waste generated or disposed.

EPA considered the amount of sludge generated as a result of the MP&M technology options, and included disposal of these sludges in the compliance cost estimates (see Section 11.0) and non-water quality impact assessments (see Section 13.0).

6.2 General Description of Facilities in Each Subcategory

Below is a general description of the types of facilities that fall within each of the proposed subcategories. Sections 11.0 and 12.0 present information on compliance costs and pollutant reductions associated with the MP&M proposed rule for each subcategory

6.2.1 General Metals Subcategory

As discussed above in Section 6.1, EPA has created the General Metals Subcategory as a "catch-all" for MP&M facilities that discharge metal-bearing wastewater (with or without oil-bearing wastewater) that do not fit the applicability of the Metal Finishing Job Shops, Non-Chromium Anodizing, Printed Wiring Board, or Steel Forming and Finishing Subcategories. Therefore, the General Metals Subcategory may include facilities from 17 of the 18 MP&M industrial sectors (i.e., all except the printed wiring board sector). This subcategory also includes general metals facilities that are owned and operated by states and municipalities. General metals facilities typically perform manufacturing or heavy rebuilding of metal products, parts, or machines. Facilities that perform metal finishing or electroplating operations on site, but do not meet the definition of a job shop (i.e., captive shops), would fit in the General Metals Subcategory.

EPA estimates that there are approximately 26,000 indirect dischargers and 3,800 direct dischargers that could be covered by this Subcategory. EPA currently regulates 26 percent of the facilities in this subcategory by existing effluent guidelines. The Agency estimates that, based on responses to its questionnaires, the Metal Finishing (40 CFR 433) and Electroplating (40 CFR 413) effluent guidelines cover approximately 16 percent of these facilities, and other metal related effluent guidelines (such as those discussed in Section 1.2.7. cover a portion of the wastewater discharges at an additional 10 percent of these facilities.

EPA is proposing to exclude from the MP&M regulations indirect dischargers that would fall into the General Metals Subcategory when they discharge less than or equal to 1 million gallons per year (MGY) of MP&M process wastewater to the POTW (see Section 14.0 for EPA's discussion of flow cutoffs). Approximately 23,000 indirect dischargers in the General Metals Subcategory discharge less than 1 MGY. If EPA did not exclude these facilities, the number of permits that POTWs would issue would double, greatly increasing their burden. Facilities discharging less than 1 MGY to a POTW, however, are still subject to other applicable pretreatment standards, including those established under 40 CFR Parts 413 and 433.

6.2.2 Metal Finishing Job Shops Subcategory

Facilities in the Metal Finishing Job Shops Subcategory must meet the following criteria: (1) perform one or more of the following 6 operations: electroplating, electroless plating, anodizing, coating (chromating, phosphating, passivation, and coloring), chemical etching and milling, and printed circuit board manufacture and (2) own not more than 50 percent (on an annual area basis) of the materials undergoing metal finishing. EPA is proposing to include printed wiring board job shops in this subcategory based on the unique economics of job shop operation.

The Agency estimates that there are approximately 1,500 indirect dischargers and 15 direct dischargers in the proposed Metal Finishing Job Shops Subcategory. EPA currently regulates all facilities in this subcategory under the existing Metal Finishing or Electroplating effluent guidelines and standards. EPA is proposing to cover all of these facilities under MP&M. Therefore, facilities subject to the Metal Finishing Job Shops Subcategory will no longer be covered by the effluent guidelines and standards in 40 CFR 413 or 40 CFR 433.

EPA has identified approximately 30,000 facilities that meet the definition of job shop but do not perform one or more of the six metal finishing operations as defined in 40 CFR 433. EPA does not consider such job shops to be part of the Metal Finishing Job Shops Subcategory. These other job shops typically perform assembly, painting, and machining on a contract basis and are likely to fall in the General Metals or Oily Waste Subcategories.

6.2.3 Non-Chromium Anodizing Subcategory

Facilities covered under the Non-Chromium Anodizing Subcategory must perform aluminum anodizing without using chromic acid or dichromate sealants. Anodizing is a surface conversion operation used to alter the properties of aluminum for better corrosion resistance and heat transfer. Generally, non-chromium anodizing facilities perform sulfuric acid anodizing; however, facilities can use other acids, such as oxalic acid, for aluminum anodizing. EPA will cover anodizers that use chromic acid or dichromate in the General Metals Subcategory or, if they operate as a job shop, in the Metal Finishing Job Shops Subcategory.

EPA estimates that there are approximately 190 indirect dischargers and, to date, has not identified any direct dischargers in the Non-Chromium Anodizing Subcategory. The wastewater generated at non-chromium anodizing facilities contains very low levels of metals (with the exception of aluminum) and toxic organic pollutants. In addition, EPA determined that compliance with one of the regulatory options that EPA considered proposing would cause 60 percent of the indirect dischargers in this subcategory to close. For the reasons discussed in detail in Section 14.0, EPA is proposing to exclude wastewater from indirect discharging non-chromium anodizing facilities from the MP&M categorical pretreatment standards. Such facilities will still need to comply with the Metal Finishing (40 CFR 433) pretreatment standards for their non-chromium anodizing wastewater and the general pretreatment standards at 40 CFR Part 403.

Some facilities that could potentially fall into the Non-Chromium Anodizing Subcategory may also perform other metal surface finishing operations. If these facilities commingle their wastewater from their non-chromium anodizing operations with wastewater from other surface finishing operations (e.g., chromic acid anodizing, electroplating, chemical conversion coating) for treatment, they will not be covered by the Non-Chromium Anodizing Subcategory. Instead, the General Metals or Metal Finishing Job Shop Subcategories would apply. However, for facilities that discharge their non-chromium anodizing wastewater separately from their other surface finishing wastewater, control authorities (e.g., POTWs) and permit writers would apply the appropriate limits to each discharge.

6.2.4 Printed Wiring Board Subcategory

The Printed Wiring Board Subcategory will cover wastewater discharges from the manufacture, maintenance, and repair of printed wiring boards (i.e., circuit boards). This subcategory does not include job shops that manufacture, maintain, or repair printed wiring boards; EPA is covering these facilities under the Metal Finishing Job Shops Subcategory, as discussed in Section 6.3.2. EPA currently regulates all facilities in this subcategory by the existing Metal Finishing or Electroplating effluent guidelines and standards, but will cover all of these facilities under MP&M. Therefore, facilities subject to the Printed Wiring Board Subcategory will no longer be covered by the effluent limitations guidelines and standards in 40 CFR 413 or 40 CFR 433. Printed wiring board facilities perform unique operations, including applying, developing and stripping of photo resist, lead/tin soldering, and wave soldering. EPA estimates that there are approximately 620 indirect dischargers and 11 direct dischargers in the proposed Printed Wiring Board Subcategory.

6.2.5 Steel Forming and Finishing

Although many facilities may perform MP&M operations with steel, EPA has established the Steel Forming and Finishing Subcategory for facilities that perform MP&M operations (listed in Section 4.4) and/or cold forming operations on steel wire, rod, bar, pipe, or tube. This subcategory does not include facilities that perform those operations on other base materials. In a separate notice, EPA has proposed to revise the Iron and Steel Manufacturing effluent guidelines. The proposed revisions to the Iron and Steel regulations exclude those facilities that EPA has determined to be appropriately regulated by the MP&M rule. EPA based this decision on the information gathered during the data collection effort for the revision to the Iron and Steel Manufacturing regulations.

The MP&M Steel Forming and Finishing Subcategory does not cover wastewater generated from any hot steel forming operations, or from cold forming, electroplating, or continuous hot dip coating of steel sheet, strip, or plates. As mentioned above, the proposed Iron and Steel Manufacturing effluent guidelines will cover wastewater from such operations.

There are approximately 110 indirect dischargers and 43 direct dischargers in the Steel Forming and Finishing Subcategory. All facilities in this subcategory have permits or other control mechanisms under the existing Iron and Steel Manufacturing regulation (40 CFR 420).

EPA is proposing to cover wastewater from these steel forming and finishing operations, regardless of whether they occur at a stand-alone facility or at a steel manufacturing facility. When a steel manufacturing facility performs these MP&M steel forming and finishing operations and commingles the wastewater for treatment with wastewater from other non-MP&M unit operations, control authorities and permit writers will need to set limits that account for both the MP&M and the Iron and Steel regulations. EPA refers to this approach as the combined waste stream formula or the building block approach. For facilities that choose to discharge their MP&M steel forming and finishing wastewater separate from their iron and steel wastewater, control authorities and permit writers will apply the appropriate limits to each discharge.

6.2.6 Oily Wastes Subcategory

EPA has created the Oily Wastes Subcategory as a “catch-all” for MP&M facilities that discharge only oil-bearing wastewater and that do not fit the applicability of the other MP&M subcategories. EPA is defining the applicability of this subcategory by the presence of specific unit operations. Facilities in the Oily Wastes Subcategory must not fit the applicability of the Railroad Line Maintenance or Shipbuilding Dry Dock Subcategories and must only discharge wastewater from one or more of the following MP&M unit operations: alkaline cleaning for oil removal, aqueous degreasing, corrosion preventive coating, floor cleaning, grinding, heat treating, impact deformation, machining, pressure deformation, solvent degreasing, testing (e.g., hydrostatic, dye penetrant, ultrasonic, magnetic flux), painting, steam cleaning, and laundering. Facilities in this subcategory are predominantly machine shops or maintenance and repair shops. EPA has defined “corrosion preventive coating” as the application of removable oily or organic solutions to protect metal surfaces against corrosive environments. Corrosion preventive coatings include, but are not limited to: petroleum compounds, oils, hard dry-film compounds, solvent-cutback petroleum-based compounds, emulsions, water-displacing polar compounds, and fingerprint removers and neutralizers. Corrosion preventive coating does not include electroplating, painting, and chemical conversion coating (including phosphate conversion coating) operations. Based on EPA’s analytical database for this proposal, EPA believes that wastewater generated from phosphate conversion coating operations contains high levels of zinc and manganese.

If a facility discharges wastewater from any of the operations listed above but also discharges wastewater from other MP&M operations (listed in Section 4.4), it does not meet the criteria of the Oily Wastes Subcategory. EPA has determined that other MP&M unit operations generate metal-bearing wastewater or combination metal- and oil-bearing wastewater and require different treatment technologies (e.g., chemical precipitation). EPA included wastewater from floor cleaning and testing operations in the Oily Wastes Subcategory after confirming through a review of the

analytical data that there is little or no metals content in these two streams. This subcategory also includes municipal and state-owned facilities performing only the listed operations.

Like the General Metals Subcategory, the Oily Wastes Subcategory may include facilities from 17 of the 18 MP&M industrial sectors (i.e., all except the printed wiring board sector).

EPA estimates that there are approximately 28,500 indirect dischargers and 900 direct dischargers in the Oily Wastes Subcategory. EPA has concluded that less than 1 percent of the MP&M process wastewater discharged from these facilities in this subcategory is covered by existing effluent guidelines.

In an effort to relieve administrative burden on POTWs that will implement the MP&M regulation, EPA is proposing to exclude from the MP&M regulations indirect dischargers that would fall into the Oily Wastes Subcategory when they discharge less than or equal to 2 MGY of MP&M process wastewater to the POTW. (See Section 14.0 for a discussion of the low-flow exclusion for indirect dischargers in the Oily Waste Subcategory.)

6.2.7 Railroad Line Maintenance Subcategory

EPA has developed the Railroad Line Maintenance Subcategory to cover facilities that perform routine cleaning and light maintenance (mostly consisting of parts replacement) on railroad engines, cars, car-wheel trucks, and similar parts or machines. More specifically, these facilities discharge wastewater from only those MP&M unit operations that EPA defines as oily operations (see Section 6.2.6, above), storm water clean-up (which is not covered by the proposed regulation), and/or washing of final products. EPA considers “washing of final product” an MP&M “oily” operation for this subcategory. The Agency reviewed the analytical wastewater sampling data for this waste stream at railroad line maintenance facilities and determined that there is little or no metal content. However, for other primarily oily subcategories (oily wastes and shipbuilding dry docks), EPA does not consider this unit operation an MP&M “oily” operation. Railroad line maintenance facilities are similar to facilities in the Oily Wastes Subcategory in that they produce oil-bearing wastewater and do not perform MP&M operations that generate wastewater that requires metals removal treatment technology. This subcategory does not include railroad manufacturing facilities or railroad overhaul or heavy maintenance facilities.

EPA estimates that there are approximately 800 indirect dischargers and 35 direct dischargers in the Railroad Line Maintenance Subcategory. The wastewater generated at railroad line maintenance facilities contains very low levels of metals and toxic organic pollutants. EPA is proposing to exclude wastewater from indirect discharging railroad line maintenance facilities from the MP&M regulations. (See Section 14.0 for a discussion on the rationale for this exclusion). However, EPA is proposing to regulate conventional pollutants for direct dischargers in this subcategory.

6.2.8 Shipbuilding Dry Dock Subcategory

EPA has created the Shipbuilding Dry Dock Subcategory to specifically cover MP&M process wastewater generated in or on dry docks and similar structures such as graving docks, building ways, marine railways, and lift barges at shipbuilding facilities (or shipyards). Shipbuilding facilities use these structures to maintain, repair, or rebuild existing ships, or perform the final assembly and launching of new ships (including barges). Shipbuilders use these structures to reach surfaces and parts that would otherwise be under water. Since dry docks and similar structures include sumps or containment systems, shipyards can control the discharge of pollutants to surface water. Typical MP&M operations that occur in dry docks and similar structures include abrasive blasting, hydro blasting, painting, welding, corrosion preventive coating, floor cleaning, aqueous degreasing, and testing (e.g., hydrostatic testing). Not all of these unit operations generate wastewater. EPA will also cover wastewater generated when a shipyard cleans a ship's hull in a dry dock (or similar structure) to remove marine life (e.g., barnacles) only in preparation for performing MP&M operations.

This subcategory will cover only process wastewater generated and discharged from MP&M operations inside and outside ships (including bilge water) that occur in or on dry docks or similar structures. The Agency is not including MP&M process wastewater that is generated at other locations at the shipyard ("on-shore" operations) in this subcategory. EPA expects that wastewater from these "on-shore" shipbuilding operations (e.g., electroplating, plasma arc cutting) will fall under either the General Metals or Oily Wastes Subcategories. Also, EPA is not including wastewater generated onboard ships when they are afloat (i.e., not in dry docks or similar structures). For U.S. military ships, EPA is in the process of establishing standards under the Uniform National Discharge Standards (UNDS) pursuant to Section 312(n) of the CWA (See 64 F.R. 25125; May 10, 1999) to regulate discharges of wastewater generated onboard these ships when they are in U.S. waters and are afloat (e.g., at a shipyard's dock).

In addition to MP&M wastewater, EPA identified three other types of water streams in or on dry docks and similar structures: flooding water, dry dock ballast water, and storm water. Flooding water enters and exits the dry dock or similar structure prior to performing any MP&M operations. For example, in a graving dock, the gates are opened, allowing flooding water in and ships to float inside the chamber. Then the flooding water is drained, leaving the ship's exterior exposed so shipyard employees can repair and maintain the ship's hull. Dry dock ballast water serves a similar purpose. It is used to lower (or sink) a floating dry dock so that a ship can float over it. Then the dry dock ballast water is pumped out, raising the dry dock with the ship on top. Flooding water and dry dock ballast water do not come into contact with MP&M operations. Finally, since these structures are located outdoors and are exposed to the elements, storm water may fall in or on the dry dock or similar structures.

EPA is proposing to exclude all three of these water streams from the MP&M rule. EPA has determined that storm water at these facilities is covered by EPA's recent Storm Water Multi-Sector General permit, similar general permits issued by authorized states, and individual storm water

permits. In general, storm water permits at shipyards include best management practices (BMPS) that are designed to prevent the contamination of storm water. For example, these practices include sweeping of areas after completion of abrasive blasting or painting.

EPA estimates that there are six indirect dischargers and six direct dischargers in the Shipbuilding Dry Dock Subcategory. Many shipbuilders operate multiple dry docks (or similar structures); this is the number of estimated facilities (not dry docks) that discharge MP&M process wastewater from dry docks or similar structures. Many shipyards perform only dry MP&M unit operations in their dry docks (and similar structures) or do not discharge wastewater generated in dry docks (and similar structures) from MP&M unit operations. Many shipyards prefer to handle this wastewater as hazardous, and contract haul it offsite due to the possible presence of copper (used as antifoulant) in paint chips from abrasive blasting operations. EPA has determined that shipyards currently discharging MP&M wastewater from dry docks have oil/water separation technology in place, such as dissolved air flotation (DAF).

The wastewater discharged from dry docks and similar structures contains very low levels of metals and toxic organic pollutants. EPA is proposing to exclude wastewater from indirect discharging dry docks and similar structures at shipbuilding facilities from the MP&M rule. (See Section 14.0 for a discussion on the rationale for this exclusion). However, EPA is proposing to regulate conventional pollutants for direct dischargers in this subcategory.

7.0 SELECTION OF POLLUTANT PARAMETERS

EPA conducted a study of MP&M wastewater to determine the presence of priority, conventional, and nonconventional pollutant parameters. The Agency defines priority pollutant parameters in Section 307(a)(1) of the CWA. In Table 7-1, EPA lists the 126 specific priority pollutants listed in 40 CFR Part 423, Appendix A. Section 301(b)(2) of the CWA requires EPA to regulate priority pollutants if EPA determines them to be present at significant concentrations. Section 304(a)(4) of the CWA defines conventional pollutant parameters to be biochemical oxygen demand, total suspended solids, oil and grease, pH, and fecal coliform. These pollutant parameters are subject to regulation as specified in Sections 304(a)(4), 304(b)(1)(a), 301(b)(2)(e), and 306 of the CWA. Nonconventional pollutant parameters are those that are neither priority nor conventional pollutant parameters. These include nonconventional metal pollutants, nonconventional organic pollutants, and other nonconventional pollutant parameters. Sections 301(b)(2)(f) and 301(g) of the CWA give EPA the authority to regulate nonconventional pollutant parameters, as appropriate, based on technical and economic considerations.

Table 7-1
Priority Pollutant List[a]

1 Acenaphthene	66 Bis(2-ethylhexyl) Phthalate
2 Acrolein	67 Butyl Benzyl Phthalate
3 Acrylonitrile	68 Di-n-butyl Phthalate
4 Benzene	69 Di-n-octyl Phthalate
5 Benzidine	70 Diethyl Phthalate
6 Carbon Tetrachloride (Tetrachloromethane)	71 Dimethyl Phthalate
7 Chlorobenzene	72 Benzo(a)anthracene (1,2-Benzanthracene)
8 1,2,4-Trichlorobenzene	73 Benzo(a)pyrene (3,4-Benzopyrene)
9 Hexachlorobenzene	74 Benzo(b)fluoranthene (3,4-Benzo fluoranthene)
10 1,2-Dichloroethane	75 Benzo(k)fluoranthene (11,12-Benzofluoranthene)
11 1,1,1-Trichloroethane	76 Chrysene
12 Hexachloroethane	77 Acenaphthylene
13 1,1-Dichloroethane	78 Anthracene
14 1,1,2-Trichloroethane	79 Benzo(ghi)perylene (1,12-Benzoperylene)
15 1,1,2,2-Tetrachloroethane	80 Fluorene
16 Chloroethane	81 Phenanthrene
17 Removed	82 Dibenzo(a,h)anthracene (1,2,5,6-Dibenzanthracene)
18 Bis(2-chloroethyl) Ether	83 Indeno(1,2,3-cd)pyrene (2,3-o-Phenylenepyrene)
19 2-Chloroethyl Vinyl Ether (mixed)	84 Pyrene
20 2-Chloronaphthalene	85 Tetrachloroethylene (Tetrachloroethene)
21 2,4,6-Trichlorophenol	86 Toluene
22 Parachlorometa Cresol (4-Chloro-3-Methylphenol)	87 Trichloroethylene (Trichloroethene)
23 Chloroform (Trichloromethane)	88 Vinyl Chloride (Chloroethylene)
24 2-Chlorophenol	89 Aldrin
25 1,2-Dichlorobenzene	90 Dieldrin
26 1,3-Dichlorobenzene	91 Chlordane (Technical Mixture & Metabolites)
27 1,4-Dichlorobenzene	92 4,4'-DDT (p,p'-DDT)
28 3,3'-Dichlorobenzidine	93 4,4'-DDE (p,p'-DDX)
29 1,1-Dichloroethylene	94 4,4'-DDD (p,p'-TDE)
30 1,2-Trans-Dichloroethylene	95 Alpha-endosulfan
31 2,4-Dichlorophenol	96 Beta-endosulfan
32 1,2-Dichloropropane	97 Endosulfan Sulfate
33 1,3-Dichloropropylene (Trans-1,3-Dichloropropene)	98 Endrin
34 2,4-Dimethylphenol	99 Endrin Aldehyde
35 2,4-Dinitrotoluene	100 Heptachlor
36 2,6-Dinitrotoluene	101 Heptachlor Epoxide
37 1,2-Diphenylhydrazine	102 Alpha-BHC
38 Ethylbenzene	103 Beta-BHC
39 Fluoranthene	104 Gamma-BHC (Lindane)
40 4-Chlorophenyl Phenyl Ether	105 Delta-BHC
41 4-Bromophenyl Phenyl Ether	106 PCB-1242 (Arochlor 1242)
42 Bis(2-Chloroisopropyl) Ether	107 PCB-1254 (Arochlor 1254)
43 Bis(2-Chloroethoxy) Methane	108 PCB-1221 (Arochlor 1221)
44 Methylene Chloride (Dichloromethane)	109 PCB-1232 (Arochlor 1232)
45 Methyl Chloride (Chloromethane)	110 PCB-1248 (Arochlor 1248)
46 Methyl Bromide (Bromomethane)	111 PCB-1260 (Arochlor 1260)
47 Bromoform (Tribromomethane)	112 PCB-1016 (Arochlor 1016)
48 Dichlorobromomethane (Bromodichloromethane)	113 Toxaphene
49 Removed	114 Antimony (total)
50 Removed	115 Arsenic (total)
51 Chlorodibromomethane (Dibromochloromethane)	116 Asbestos (fibrous)
52 Hexachlorobutadiene	117 Beryllium (total)
53 Hexachlorocyclopentadiene	118 Cadmium (total)
54 Isophorone	119 Chromium (total)
55 Naphthalene	120 Copper (total)
56 Nitrobenzene	121 Cyanide (total)
57 2-Nitrophenol	122 Lead (total)
58 4-Nitrophenol	123 Mercury (total)
59 2,4-Dinitrophenol	124 Nickel (total)
60 4,6-Dinitro-o-Cresol (Phenol, 2-methyl-4,6-dinitro)	125 Selenium (total)
61 N-Nitrosodimethylamine	126 Silver (total)
62 N-Nitrosodiphenylamine	127 Thallium (total)
63 N-Nitrosodi-n-propylamine (Di-n-propylnitrosamine)	128 Zinc (total)
64 Pentachlorophenol	129 2,3,7,8-Tetrachloro-dibenzo-p-Dioxin (TCDD)
65 Phenol	

Source: 40 CFR Part 423, Appendix A.

[a]Priority pollutants are numbered 1 through 129 but include 126 pollutants since EPA removed three pollutants from the list (Numbers 17, 49, and 50).

EPA considered 302 metal and organic pollutant parameters listed in The 1990 Industrial Technology Division List of Analytes (1) for potential regulation under the MP&M proposed rule. The Agency also considered 22 conventional and other nonconventional pollutant parameters for potential regulation under the MP&M proposal. These 327 pollutant parameters of which the Agency measured in the MP&M sampling program are identified in Section 3.0.

The Agency did not consider fecal coliform, a conventional pollutant parameter, for regulation under the MP&M rule; therefore, it is not included in the 327 pollutant parameters discussed above. The presence of fecal coliform bacteria, a microorganism that resides in the intestinal tract of humans and other warm-blooded animals, indicates that wastewater has been contaminated with feces from humans or other warm-blooded animals. EPA does not expect fecal coliform to be present in process wastewater from MP&M sites because sanitary wastewater is discharged separately from process wastewater.

Section 7.1 discusses the criteria used to identify pollutant parameters of concern (i.e., considered for regulation) under the MP&M proposed rule. Sections 7.2 and 7.3 present the criteria used to select pollutant parameters for regulation for direct and indirect dischargers, respectively. Section 7.4 lists the references used in this chapter.

7.1 Identification of Pollutant Parameters of Concern

EPA analyzed for the 327 pollutant parameters discussed above in over 1,932 samples of wastewater collected during the MP&M sampling program described in Section 3.0. Of these samples, EPA collected 727 from unit operation wastewater, 693 from influent-to-treatment wastewater, and 684 from effluent-from-treatment wastewater. The Agency notes that a number of these samples fit into more than one category: EPA classified 20 unit operations as influents-to-treatment and 152 influents-to-treatment for one technology as effluents-from-treatment for a second technology. EPA reduced the list of 324 pollutants to 132 pollutants (referred to as pollutants of concern or POCs) for further consideration by retaining only those pollutants that met the following criteria:

- EPA detected the pollutant parameter in at least three samples collected during the MP&M sampling program.

- The average concentration of the pollutant parameter in samples of wastewater from MP&M unit operations and influents-to-treatment was at least five times the minimum level (ML) or the average concentration of effluent-from-treatment wastewater samples exceeded five times the minimum level. EPA describes the ML as “the lowest level at which the entire analytical system must give a recognizable signal and an acceptable calibration point for the analyte” (2).

- EPA analyzed the pollutant parameter in a quantitative manner following the appropriate quality assurance/quality control (QA/QC) procedures. To meet this criteria, the Agency excluded wastewater analyses performed solely for certain semi-quantitative "screening" purposes. EPA performed these semi-quantitative analyses only in unusual cases (e.g. to qualitatively screen for the presence of a rare metal such as osmium).

For the first criterion, EPA used data from the unit operation, influent-to-treatment, and effluent-from-treatment wastewater samples to determine the total number of detected samples for each pollutant parameter. EPA calculated the average pollutant concentrations from the unit operation and influent-to-treatment wastewater samples to determine if the data met the second criterion. Separately, EPA also included effluent-from-treatment wastewater pollutant concentrations in this assessment, and the following pollutants passed the second criterion: 1,1-dichloroethene, chloroform, diphenyl ether, isophorone, n-nitrosopiperidine, and trichlorofluoromethane. Because these pollutants have concentrations exceeding five times the ML in the effluent streams, EPA considered them pollutants of concern. Of the 324 pollutant parameters initially considered by the Agency for potential regulation under MP&M, EPA excluded 192 as pollutant parameters of concern for the following reasons:

- EPA did not detect one hundred and thirteen (113) pollutant parameters in samples collected during the MP&M sampling program. Table 7-2 lists these pollutant parameters.

- EPA detected fifty (50) in less than three samples collected during the MP&M sampling program. Table 7-3 lists these pollutant parameters.

- EPA detected thirty (30) pollutant parameters at average concentrations that were less than five times the ML in unit operations and influent-to-treatment or did not have a detection limit (acidity, total alkalinity, and pH). Table 7-4 lists these pollutant parameters.

- EPA did not analyze five of the remaining pollutants (strontium, potassium, sulfur, silicon, and phosphorus) in a quantitative manner. Rather, EPA performed analyses for these pollutants using semi-quantitative methods for "screening" purposes to determine if these analytes were present. Therefore, the Agency did not subject these analytes to the QA/QC procedures required by analytical method 1620. Based on the screening results, the Agency performed a full quantitative analysis for gold, palladium, platinum, and rhodium.

Table 7-2

Pollutant Parameters Not Detected in Any Samples Collected During the MP&M Sampling Program

Priority Pollutant Parameters	
1,2-Dichloropropane	Benzo(K)Fluoranthene
1,3-Dichlorobenzene	Bis(2-Chloroisopropyl) Ether
2-Chloroethylvinyl Ether	Chrysene
3,3'-Dichlorobenzidine	Dibenzo(A,H)Anthracene
4-Bromophenyl Phenyl Ether	Hexachlorobenzene
4-Chlorophenylphenyl Ether	Hexachlorobutadiene
Acenaphthylene	Hexachlorocyclopentadiene
Benzidine	Hexachloroethane
Benzo(A)Anthracene	Indeno(1,2,3-Cd)Pyrene
Benzo(A)Pyrene	Pentachlorophenol
Benzo(B)Fluoranthene	Trans-1,2-Dichloroethene
Benzo(Ghi)Perylene	Trans-1,3-Dichloropropene
Nonconventional Organic Pollutant Parameters	
1,2,3-Trichlorobenzene	Aniline, 2,4,5-Trimethyl-
1,2,3-Trichloropropane	Aramite
1,2,3-Trimethoxybenzene	Benzanthrone
1,2,4,5-Tetrachlorobenzene	Benzenethiol
1,2-Dibromo-3-Chloropropane	Biphenyl, 4-Nitro
1,2-Dibromoethane	Chloroacetonitrile
1,3-Butadiene, 2-Chloro	Crotonaldehyde
1,3-Dichloro-2-Propanol	Crotoxyphos
1,3-Dichloropropane	Diethyl Ether
1,5-Naphthalenediamine	Dimethyl Sulfone
1-Chloro-3-Nitrobenzene	Diphenyldisulfide
1-Phenylnaphthalene	Ethyl Cyanide
2,3,4,6-Tetrachlorophenol	Ethyl Methacrylate
2,3,6-Trichlorophenol	Ethyl Methanesulfonate
2,3-Benzofluorene	Hexachloropropene
2,3-Dichloroaniline	Iodomethane
2,3-Dichloronitrobenzene	Isosafrole
2,4,5-Trichlorophenol	Longifolene
2,6-Dichloro-4-Nitroaniline	Malachite Green
2,6-Dichlorophenol	Mestranol
2-Methylbenzothioazole	Methapyrilene
2-Nitroaniline	Methyl Methanesulfonate
2-Phenylnaphthalene	n-Nitrosodiethylamine

Table 7-2 (Continued)

Nonconventional Organic Pollutant Parameters (continued)	
2-Propen-1-Ol	o-Toluidine, 5-Chloro-
2-Propenenitrile, 2-Methyl-	p-Dimethylaminoazobenzene
3,3'-Dimethoxybenzidine	Pentachlorobenzene
3,5-Dibromo 4-Hydroxybenzonitrile	Pentachloroethane
3-Chloropropene	Perylene
3-Methylcholanthrene	Phenacetin
3-Nitroaniline	Pronamide
4,4'-Methylenebis(2-Chloroaniline)	Squalene
4,5-Methylene Phenanthrene	Thioacetamide
4-Chloro-2-Nitroaniline	Trans-1,4-Dichloro-2-Butene
5-Nitro-O-Toluidine	Triphenylene
7,12-Dimethylbenz(A)Anthracene	Vinyl Acetate
Nonconventional Metal Pollutant Parameters	
Cerium	Praseodymium
Erbium	Rhenium
Europium	Samarium
Gadolinium	Scandium
Gallium	Tellurium
Germanium	Terbium
Holmium	Thorium
Indium	Thulium
Iodine	Uranium
Lanthanum	

Source: MP&M sampling data.

Table 7-3

Pollutant Parameters Detected in Less Than Three Samples Collected During the MP&M Sampling Program

Priority Pollutant Parameters	
1,1,2,2-Tetrachloroethane	2-Chloronaphthalene
1,1,2-Trichloroethane	2-Chlorophenol
1,2,4-Trichlorobenzene	Acrylonitrile
1,2-Dichlorobenzene	Bis(2-Chloroethoxy)Methane
1,2-Dichloroethane	Bis(2-Chloroethyl) Ether
1,2-Diphenylhydrazine	Bromomethane
1,4-Dichlorobenzene	Nitrobenzene
2,4-Dichlorophenol	n-Nitrosodi-n-Propylamine
2,4-Dinitrotoluene	Vinyl Chloride
Nonconventional Organic Pollutant Parameters	
1,1,1,2-Tetrachloroethane	Ethylenethiourea
1,2:3,4-Diepoxybutane	n-Nitrosodi-n-Butylamine
1,3,5-Trithiane	n-Nitrosomethylphenylamine
1,4-Dinitrobenzene	o-Anisidine
1,4-Naphthoquinone	p-Chloroaniline
1-Naphthylamine	Pentamethylbenzene
2,6-Di-Tert-Butyl-P-Benzoquinone	Phenothiazine
2-Picoline	p-Nitroaniline
4-Aminobiphenyl	Resorcinol
Beta-Naphthylamine	Safrole
Carbazole	Thianaphthene
Cis-1,3-Dichloropropene	Thioxanthe-9-One
Dibromomethane	Toluene, 2,4-Diamino-
Nonconventional Metal Pollutant Parameters	
Dysprosium	Rhodium
Hafnium	Ruthenium
Neodymium	Zirconium

Source: MP&M sampling data.

Table 7-4

Pollutant Parameters Detected at Average Concentrations of Less Than Five Times the Minimum Level During the MP&M Sampling Program

Priority Pollutant Parameters	
2,4,6-Trichlorophenol	Chloroform
4,6-Dinitro-o-Cresol	Chloromethane
Benzene	Dibromochloromethane
Bromodichloromethane	Diethyl Phthalate
Carbon Tetrachloride (Tetrachloromethane)	Tribromomethane
Nonconventional Organic Pollutant Parameters	
2-(Methylthio)Benzothiazole	n-Nitrosopiperidine
Diphenyl Ether	o-Toluidine
n-Nitrosomethylethylamine	Trichlorofluoromethane
n-Nitrosomorpholine	
Nonconventional Metal Pollutant Parameters	
Bismuth	Osmium
Iridium	Palladium
Lithium	Tantalum
Lutetium	Tungsten
Niobium	Ytterbium

Source: MP&M sampling data.

After excluding these pollutants, EPA defines the 132 remaining pollutants as pollutant parameters of concern (POCs). These include 48 priority pollutant parameters (34 priority organic pollutants, 13 priority metal pollutants, and cyanide), 3 conventional pollutant parameters, and 81 nonconventional pollutant parameters (50 organic pollutants, 15 metal pollutants, and 16 other nonconventional pollutants). These pollutant parameters, along with the number of times EPA analyzed and detected each pollutant parameter in the influent or in unit operations and the corresponding average concentration (excluding nondetected pollutants), are shown in Table 7-5.

Table 7-5

Pollutant Parameters Selected for Further Consideration Under the MP&M Proposed Rule

Pollutant Parameter	No. of Times Analyzed for All Samples	No. of Times Detected for All Samples	Average Concentration in Samples from Unit Operations and Treatment Influents (mg/L)
Priority Organic Pollutants			
1,1,1-Trichloroethane	1043	28	0.327
1,1-Dichloroethane	1043	7	0.091
1,1-Dichloroethylene	1043	3	0.418
2,4-Dimethylphenol	994	31	0.078
2,4-Dinitrophenol	946	4	83.7
2,6-Dinitrotoluene	1029	3	2.73
2-Nitrophenol	1021	9	0.394
4-Chloro-m-cresol	1003	95	260
4-Nitrophenol	969	5	2.99
Acenaphthene	1029	6	0.332
Acrolein	1003	5	0.307
Anthracene	1029	4	0.117
Bis(2-Ethylhexyl) Phthalate	1028	211	4.15
Benzyl Butyl Phthalate	1026	16	1.08
Chlorobenzene	1043	7	0.282
Chloroethane	1043	4	4.22
Chloroform	1043	331	0.049
Di-N-Butyl Phthalate	1026	41	0.352
Di-N-Octyl Phthalate	1028	18	1.58
Dimethyl Phthalate	994	3	0.739
Ethylbenzene	1043	61	0.165
Fluoranthene	1028	4	0.132
Fluorene	1029	18	0.956
Isophorone	996	3	0*
Methylene Chloride	1043	52	0.403
n-Nitrosodimethylamine	996	3	3.68
N-Nitrosodiphenylamine	1029	15	1.14
Naphthalene	1029	71	0.638
Phenanthrene	1029	45	0.500
Phenol	1021	244	10.1
Pyrene	1028	5	0.219

Table 7-5 (Continued)

Pollutant Parameter	No. of Times Analyzed for All Samples	No. of Times Detected for All Samples	Average Concentration in Samples from Unit Operations and Treatment Influents (mg/L)
Tetrachloroethene	1043	23	0.210
Priority Organic Pollutants (continued)			
Toluene	1043	83	0.230
Trichloroethylene	1042	40	0.092
Priority Metal Pollutants			
Antimony	1956	606	6.12
Arsenic	1972	627	0.178
Beryllium	1972	301	0.147
Cadmium	1972	873	244
Chromium	1972	1480	1,029
Copper	1972	1752	495
Cyanide	406	327	2,072
Lead	1972	911	30.0
Mercury	1970	321	0.0014
Nickel	1972	1518	356
Selenium	1956	317	0.137
Silver	1972	698	0.531
Thallium	1956	206	0.065
Zinc	1971	1691	188
Conventional Pollutants			
BOD 5-Day (Carbonaceous)	1005	757	2,015
Oil And Grease (As HEM)	1028	554	2,308
Total Suspended Solids	1959	1563	1,007
Nonconventional Organic Pollutants			
1,4-Dioxane	1003	33	0.854
1-Bromo-2-Chlorobenzene	989	8	0.233
1-Bromo-3-Chlorobenzene	989	6	0.135
1-Methylfluorene	989	24	0.347
1-Methylphenanthrene	989	29	0.581
2-Butanone	1003	160	1.59
2-Hexanone	1003	7	1.26
2-Isopropylnaphthalene	989	6	3.21
2-Methylnaphthalene	989	61	0.775
2-Propanone	1003	593	3.14
3,6-Dimethylphenanthrene	989	13	1.24
4-Methyl-2-Pentanone	1003	91	5.19
Acetophenone	989	10	0.159

Table 7-5 (Continued)

Pollutant Parameter	No. of Times Analyzed for All Samples	No. of Times Detected for All Samples	Average Concentration in Samples from Unit Operations and Treatment Influents (mg/L)
Alpha-Terpineol	978	133	13.6
Nonconventional Organic Pollutants (continued)			
Aniline	989	19	0.684
Benzoic Acid	989	202	277
Benzyl Alcohol	989	61	1.23
Biphenyl	989	23	0.174
Carbon Disulfide	1003	63	0.408
Dibenzofuran	989	4	0.055
Dibenzothiophene	988	6	0.240
Diphenyl Ether	989	5	0.047
Diphenylamine	989	14	0.704
Hexanoic Acid	989	237	15.2
Isobutyl Alcohol	1003	19	0.167
m+p Xylene	595	31	0.159
m-Xylene	408	21	0.498
Methyl Methacrylate	1003	6	0.396
n,n-Dimethylformamide	989	63	0.193
n-Decane	989	67	2.10
n-Docosane	989	108	3.47
n-Dodecane	989	125	13.8
n-Eicosane	988	156	3.30
n-Hexacosane	989	95	5.84
n-Hexadecane	989	168	6.27
n-Nitrosopiperidine	989	4	0.020
n-Octacosane	989	40	7.45
n-Octadecane	989	174	5.74
n-Tetracosane	988	90	4.13
n-Tetradecane	989	158	12.7
n-Triacontane	988	55	2.69
o+p Xylene	408	30	0.256
o-Cresol	989	16	0.067
o-Xylene	595	40	0.058
p-Cresol	989	82	0.293
p-Cymene	989	21	0.988
Pyridine	989	37	0.920
Styrene	989	9	0.261
Trichlorofluoromethane	1043	12	0.049

Table 7-5 (Continued)

Pollutant Parameter	No. of Times Analyzed for All Samples	No. of Times Detected for All Samples	Average Concentration in Samples from Unit Operations and Treatment Influents (mg/L)
Tripropyleneglycol Methyl Ether	989	141	190
Nonconventional Metal Pollutants			
Aluminum	1972	1520	166
Barium	1972	1651	1.75
Boron	1913	1645	85.0
Calcium	1972	1929	68.4
Cobalt	1972	640	12.8
Gold	161	104	16.2
Iron	1972	1743	777
Magnesium	1972	1803	53.8
Manganese	1972	1620	43.4
Molybdenum	1972	1091	2.97
Sodium	1972	1953	3,384
Tin	1912	850	153
Titanium	1913	949	32.6
Vanadium	1972	504	5.31
Yttrium	1913	306	0.061
Other Nonconventional Pollutants			
Amenable Cyanide	160	128	44.3
Ammonia As Nitrogen	689	569	385
Chemical Oxygen Demand (COD)	1461	1343	11,289
Chloride	677	631	5,526
Fluoride	688	618	301
Hexavalent Chromium	1074	268	1.78
Sulfate	1171	1086	7,046
Total Dissolved Solids	1953	1948	21,883
Total Kjeldahl Nitrogen	661	572	606
Total Organic Carbon (TOC)	997	838	3,385
Total Petroleum Hydrocarbons (As SGT-HEM)	1016	350	841
Total Phosphorus	500	452	170
Total Recoverable Phenolics	1357	871	11.7
Total Sulfide	215	80	6.50
Weak-Acid Dissociable Cyanide	72	62	19.4
Ziram	31	22	1.41

Source: MP&M sampling data.

7.2 Pollutants Proposed to be Regulated for Direct Dischargers

EPA developed the list of pollutants to be regulated for each of the MP&M subcategories from the pollutants of concern list discussed above. As a first step in the selection of regulated pollutants, the Agency grouped the MP&M subcategories (discussed in Section 6) according to whether the facilities in the subcategory generated wastewater with high metals content (metal-bearing) or wastewater with low concentration of metals and high oil and grease content (oil-bearing). EPA determined that the following subcategories generate metal-bearing wastewater: General Metals, Metal Finishing Job Shops, Non-Chromium Anodizing, Printed Wiring Board, and Steel Forming and Finishing. For the remainder of the subcategories (Oily Wastes, Railroad Line Maintenance, and Shipbuilding Dry Docks), the Agency determined that they generate oil-bearing wastewater. For both of these groups, the Agency analyzed the concentrations and prevalence of the pollutants of concern from unit operations, unit operation rinses, and influent to treatment systems in order to determine which POCs EPA could eliminate from its list of pollutants considered for regulation. The tables in Section 5 summarize the data that EPA considered in determining the pollutants selected for regulation.

EPA considered the following factors in determining which POCs should be eliminated from the potential list of regulated pollutants:

- The pollutant is controlled through the regulation of other pollutants.
- The pollutant is present in only trace amounts in the subcategory and/or is not likely to cause toxic effects.
- The pollutant may serve as a treatment chemical.
- The pollutant is not controlled by the selected BPT/BAT technology.

7.2.1 Regulated Pollutant Analysis for Direct Dischargers in the Metal-Bearing Subcategories

As mentioned in Section 7.2, EPA determined that the following subcategories generate metal-bearing wastewater: General Metals, Metal Finishing Job Shops, Non-Chromium Anodizing, Printed Wiring Board, and Steel Forming and Finishing. This section describes EPA's proposed regulated pollutant selection criteria for direct dischargers in the metal-bearing subcategories.

EPA did not select the 42 pollutants of concern present in Table 7-6 because they are controlled through the regulation of other pollutants in the metal-bearing subcategories.

Table 7-6

Pollutants Not Selected for Proposed Regulation for the Metal-Bearing Subcategories Because They Are Controlled Through the Regulation of Other Pollutants

Conventional Pollutant	
BOD_5	
Other Nonconventional Pollutant	
COD	Total Recoverable Phenolics
Hexavalent Chromium	Weak-Acid Dissociable Cyanide
Total Petroleum Hydrocarbons (as SGT-HEM)	
Nonconventional Organic Pollutants	
1,4-Dioxane	n-Decane
1-Bromo-2-Chlorobenzene	n-Docosane
1-Bromo-3-Chlorobenzene	n-Dodecane
2-Butanone	n-Eicosane
2-Hexanone	n-Hexacosane
2-Propanone	n-Nitrosopiperidine
4-Methyl-2-Pentanone	n-Octacosane
Acetophenone	n-Octadecane
Alpha-Terpineol	n-Tetracosane
Benzyl Alcohol	n-Triacontane
Diphenyl Ether	o+p Xylene
Diphenylamine	o-Cresol
Hexanoic Acid	o-Xylene
Isobutyl Alcohol	p-Cresol
m+p Xylene	Pyridine
m-Xylene	Styrene
Methyl Methacrylate	Trichlorofluoromethane
n,n-Dimethylformamide	Tripropylenenglycol Methyl Ether

BOD_5 and COD are methods for measuring the oxygen demand of wastewater. EPA is proposing a limit for Total Organic Carbon (TOC), an alternate method that measures all oxidizable organic material in a waste stream, including some organic chemicals not oxidized (and, therefore not detected) in the BOD_5 and COD tests. EPA chose TOC as an indicator parameter because of its ability to measure all types of organic pollutants and because it found TOC to be the best general indicator parameter for measuring the sum of organic compounds in an MP&M waste stream. EPA is not proposing a limit for hexavalent chromium because it has selected total chromium for regulation. Weak-acid dissociable cyanide will be controlled through the regulation of total cyanide (or amenable

cyanide). EPA did not propose a limit for Total Petroleum Hydrocarbons (TPH) (as SGT-HEM) because it believes that the regulation of oil and grease (O&G) and EPA's proposed organics control options will control the discharge of TPH (as SGT-HEM). The parameter Total Recoverable Phenolics will be controlled through the regulation of the Total Organics Parameter (TOP) which includes compounds such as phenol. EPA also believes that the list of 36 nonconventional organic compounds listed in the table above will be controlled through the regulation of TOP. The organic parameters that comprise the TOP are explained in more detail later in this section.

EPA determined that it was not necessary to propose limits for the 12 metals listed in Table 7-7 because it detected these metals at low levels in its sampling of MP&M wastewater. As shown in Table 5-14, the median concentration at the influent to treatment for all of these metals was less than 0.1 mg/L. EPA also decided not to propose a limit for fluoride because the Agency did not detect fluoride at concentrations that would cause toxic effects. As shown in Table 5-14, the median concentration of fluoride at the influent to treatment was 1.55 mg/L. This value is below EPA's primary drinking water standard for fluoride (the maximum contaminant level (MCL)) which is 4 mg/L.

Table 7-7

Pollutants Not Selected for Proposed Regulation for the Metal-Bearing Subcategories Because They Are Present in Only Trace Amounts and/or Are Not Likely to Cause Toxic Effects

Priority Metals	
Antimony	Mercury
Arsenic	Selenium
Beryllium	Thallium
Nonconventional Metals	
Barium	Titanium
Cobalt	Vanadium
Gold	Yttrium
Other Nonconventional Pollutant	
Fluoride	

EPA did not select the 8 pollutants of concern presented in Table 7-8 for proposed regulation in the metal-bearing subcategories because they may be used as treatment chemicals in the MP&M industry.

Table 7-8

Pollutants Not Selected for Proposed Regulation for the Metal-Bearing Subcategories Because They May Serve as Treatment Chemicals in the MP&M Industry

Nonconventional Metals	
Aluminum	Magnesium
Calcium	Sodium
Iron	
Other Nonconventional Pollutants	
Sulfate	Ziram
Chloride	

EPA eliminated the nonconventional metals listed in Table 7-8 plus sulfate and chloride from consideration because regulation of these pollutants could interfere with their beneficial use as wastewater treatment additives. In the case of ziram, EPA detected this pollutant at MP&M facilities that use sodium dimethyldithiocarbamate (DTC) as a reducing and precipitating agent in the treatment of complexed or chelated metals. For the MP&M proposal, EPA based the estimated costs and pollutant removals associated with the treatment of chelated or complexed metals on the use of DTC. When DTC is used appropriately, it may effectively enhance the removal of some difficult to treat pollutants without impacting the environment or POTW operations. However, DTC is toxic to aquatic life and to activated sludge and thus can upset POTW operations. DTC can combine to form, or break down to, a number of other toxic chemicals, including thiram and ziram (both EPA registered fungicides) and other thiurams, other dithiocarbamates, carbon disulfide, and dimethylamine. Ziram is known to be toxic to aquatic life at the following levels: LC 50 less than 10 ug/L (parts per billion) for several varieties of bluegill and trout; LC 50 between 10 and 100 ug/L in other studies (see AQUIRE database at http**:**//www.epa.gov/medecotx/quicksearch.htm). EPA solicits comment in the proposal on the use of DTC for the treatment of chelated wastewater and its potential harmful effects on the environment and on POTW operations. As explained in the proposed rule, the Agency is particularly interested in receiving data and information on alternative treatments for wastewater containing chelated or complexed metals.

EPA did not select the 5 pollutants of concern presented in Table 7-9 for proposed regulation in the metal-bearing subcategories because they are not controlled by the selected BPT/BAT technology. EPA's analytical data showed that the proposed BPT/BAT treatment option did not effectively remove the low levels of ammonia as nitrogen or the low levels of Total Kjeldahl Nitrogen present in MP&M wastewater. As shown in Table 5-14, the median ammonia concentration at the influent to treatment was only 2.56 mg/L and treatment systems sampled by EPA achieved on average less than 20 percent removal. Similarly, the proposed BPT/BAT treatment systems sampled by EPA

did not demonstrate effective removal of boron, total phosphorous, or Total Dissolved Solids and only demonstrated incidental removal of boron.

Table 7-9

Pollutants Not Selected for Proposed Regulation for the Metal-Bearing Subcategories Because They Are Not Controlled by the Selected BPT/BAT Technology

Other Nonconventional Pollutants	
Ammonia as Nitrogen	Total Kjeldahl Nitrogen
Total Dissolved Solids	Total Phosphorous
Nonconventional Metal Pollutant	
Boron	

EPA considered proposing limits for all of the priority and nonconventional organic pollutants listed in Table 7-10; however, due to the variety of organic pollutants used across MP&M facilities, EPA determined that it would be burdensome to facilities and permit writers/control authorities have to determine which limits to apply to a facility. Instead, EPA is proposing an approach similar to the one used in the Metal Finishing Effluent Guidelines (40 CFR Part 433). EPA developed a list of organic pollutants, called the Total Organics Parameter (TOP), using the list of organic priority pollutants and other nonconventional organic pollutants that met EPA's pollutant of concern criteria for this rule. Of the nonconventional organic chemicals on the MP&M pollutant of concern list, EPA included only those that were removed in appreciable quantities by the selected technology option (based on toxic weighted pound-equivalents) in two or more subcategories. The TOP list is comprised of all of the priority and nonconventional organic pollutants listed in Table 7-10.

Table 7-10

64 Remaining Pollutants Considered for Proposed Regulation for the Metal-Bearing Subcategories

Priority Metals	
Cadmium	Lead
Chromium	Nickel
Copper	Silver
Cyanide	Zinc
Nonconventional Metals	
Manganese	Tin
Molybdenum	
Conventional Pollutants	
Oil and Grease (as HEM)	Total Suspended Solids
Other Nonconventional Pollutants	
Amenable Cyanide	Total Sulfide
Total Organic Carbon	
Priority Organic Pollutants	
1,1,1-Trichloroethane	Di-n-Butyl Phthalate
1,1-Dichloroethane	Di-n-Octyl Phthalate
1,1-Dichloroethylene	Dimethyl Phthalate
2,4-Dimethylphenol	Ethylbenzene
2,4-Dinitrophenol	Fluoranthene
2,6-Dinitrotoluene	Fluorene
2-Nitrophenol	Isophorone
4-Chloro-m-cresol	Methylene Chloride
4-Nitrophenol	n-Nitrosodimethylamine
Acenaphthene	n-Nitrosodiphenylamine
Acrolein	Naphthalene
Anthracene	Phenanthrene
Benzyl Butyl Phthalate	Phenol
Bis(2-Ethylhexyl) Phthalate	Pyrene
Chlorobenzene	Tetrachloroethene
Chloroethane	Toluene
Chloroform	Trichloroethylene
1-Methylfluorene	Biphenyl
1-Methylphenanthrene	Carbon Disulfide
2-Isopropylnaphthalene	Dibenzofuran
2-Methylnaphthalene	Dibenzothiophene

Table 7-10 (Continued)

Nonconventional Organic Pollutants	
3,6-Dimethylphenanthrene	n-Hexadecane
Aniline	n-Tetradecane
Benzoic Acid	p-Cymene

EPA has derived the numerical limit for TOP based on the contribution of each of the organic pollutants listed in Table 7-10 using the data collected during sampling and determined the limitation using the same statistical methodology used for other limits developed for this proposal (see Table 10-7 for the list of TOP pollutants). In any case where the data for these pollutants indicated a level below the minimum level (ML) (i.e., below quantitation), EPA used the ML for the specific pollutant in the summation of the TOP limit. Facilities will only have to monitor for those TOP chemicals that are reasonably present (see Section 15.2.6 for a discussion on monitoring waivers). Note that the TOP limit shall not be adjusted for those pollutants that are not reasonably present. In the proposal, EPA solicits comment on this methodology.

As discussed above, EPA is also proposing to allow the use of an indicator parameter to measure the presence of organic pollutants in MP&M process wastewater. Facilities can monitor for the organic pollutants specified in the TOP list to demonstrate compliance with the TOP limit or they can monitor for Total Organic Carbon (TOC) and meet the TOC limit.

Finally, EPA is proposing a third alternative to reduce monitoring burden – the use of an organic pollutant management plan. The organic pollutant management plan would need to specify the following, to the satisfaction of the permitting authority or control authority:

- The toxic and non-conventional organic constituents used at the facility;
- The disposal method used;
- The procedures in place for ensuring that organic pollutants do not routinely spill or leak into the wastewater or that minimize the amount of organic pollutants used in the process;
- The procedures in place to manage the oxidation reduction potential (ORP) during cyanide destruction to control the formation of chlorinated organic byproducts; and
- The procedures to prevent the over dosage of dithiocarbamates when treating chelated wastewater.

Facilities choosing to develop an organic pollutant management plan would need to certify that the procedures described in the plan are being implemented at the facility. Section 15.2.6 explains the organic management plan in greater detail.

In order to determine the pollutants proposed for regulation for each of the metal-bearing subcategories, EPA considered each of the remaining pollutants in Table 7-10 on a subcategory-by-subcategory basis. That is, after eliminating the pollutants listed in Tables 7-6 through 7-9 by analyzing all of the data for the metal-bearing subcategories combined, EPA then considered only data from each individual subcategory in order to determine the proposed regulated pollutants for each subcategory.

7.2.1.1 General Metals Subcategory

For the direct dischargers in the General Metals subcategory, EPA proposed regulations for all of the pollutants listed in Table 7-10. For the organic parameters listed in Table 7-9, facilities in this subcategory may choose from the following three options in order to comply with the regulation: comply with the limit for TOC; comply with the limit for TOP; or implement an organic pollutant management plan. Section 14 lists the effluent limitations for direct dischargers in the General Metals subcategory.

7.2.1.2 Metal Finishing Job Shops Subcategory

For the direct dischargers in the Metal Finishing Job Shops subcategory, EPA proposed regulations for all of the pollutants listed in Table 7-10. For the organic parameters listed in Table 7-10, facilities in this subcategory may choose from the following three options in order to comply with the regulation: comply with the limit for TOC; comply with the limit for TOP; or implement an organic pollutant management plan. Section 14 lists the effluent limitations for direct dischargers in the Metal Finishing Job Shops subcategory.

7.2.1.3 Non-Chromium Anodizing Subcategory

For the direct dischargers in the Non-Chromium Anodizing subcategory, EPA proposed regulations for TSS, O&G, aluminum, manganese, nickel, and zinc. Although EPA had eliminated aluminum from consideration for regulation for the metal-bearing subcategories because of its use as a treatment chemical, EPA decided to propose limits for aluminum for direct dischargers in this subcategory because of the large amount of aluminum discharged by non-chromium anodizing facilities. (See Section 6.6.3 for a description of the Non-Chromium Anodizing subcategory.) EPA also determined that unit operations performed at non-chromium anodizing facilities may generate wastewater containing significant quantities of manganese, nickel, and zinc and is proposing effluent limitations for these three metals. The Agency did not identify a large number of organic pollutants in wastewater from non-chromium anodizing operations and therefore did not propose a TOC or TOP limit for these dischargers. It did, however, propose a limit for O&G to control the discharge of this

pollutant into surface water. Section 14 lists the effluent limitations for direct dischargers in the Non-Chromium Anodizing subcategory.

7.2.1.4 Printed Wiring Board Subcategory

For the direct dischargers in the Printed Wiring Board subcategory, EPA is proposing regulations for all of the pollutants listed in Table 7-10 except cadmium, molybdenum and silver. These three metals were not found at significant concentrations at facilities in the this subcategory. For the organic parameters listed in Table 7-10, facilities in the Printed Wiring Board subcategory may choose from the following three options in order to comply with the regulation: comply with the limit for TOC; comply with the limit for TOP; or implement an organic pollutant management plan. Section 14 lists the effluent limitations for direct dischargers in the Printed Wiring Board subcategory.

7.2.1.5 Steel Forming and Finishing Subcategory

For the direct dischargers in the Steel Forming and Finishing subcategory, EPA proposed regulations for all of the pollutants listed in Table 7-10. For the organic parameters listed in Table 7-10, facilities in this subcategory may choose from the following three options in order to comply with the regulation: comply with the limit for TOC; comply with the limit for TOP; or implement an organic pollutant management plan. Section 14 lists the effluent limitations for direct dischargers in the Steel Forming and Finishing subcategory.

7.2.2 Regulated Pollutant Analysis for Direct Dischargers in the Oil-Bearing Subcategories

As mentioned in Section 7.2, EPA determined that the following subcategories generate oil-bearing wastewater: Oily Wastes, Railroad Line Maintenance, and Shipbuilding Dry Docks. This section describes EPA's proposed regulated pollutant selection criteria for direct dischargers in the oil-bearing subcategories.

EPA did not select the 39 pollutants of concern presented in Table 7-11 that are controlled through the regulation of other pollutants in the oil-bearing subcategories.

Table 7-11

Pollutants Not Selected for Proposed Regulation for the Oil-Bearing Subcategories Because They Are Controlled Through the Regulation of Other Pollutants

Other Nonconventional Pollutants	
COD	Total Recoverable Phenolics
Total Petroleum Hydrocarbons (as SGT-HEM)	
Nonconventional Organic Pollutants	
1,4-Dioxane	n-Decane
1-Bromo-2-Chlorobenzene	n-Docosane
1-Bromo-3-Chlorobenzene	n-Dodecane
2-Butanone	n-Eicosane
2-Hexanone	n-Hexacosane
2-Propanone	n-Nitrosopiperidine
4-Methyl-2-Pentanone	n-Octacosane
Acetophenone	n-Octadecane
Alpha-Terpineol	n-Tetracosane
Benzyl Alcohol	n-Triacontane
Diphenyl Ether	o+p Xylene
Diphenylamine	o-Cresol
Hexanoic Acid	o-Xylene
Isobutyl Alcohol	p-Cresol
m+p Xylene	Pyridine
m-Xylene	Styrene
Methyl Methacrylate	Trichlorofluoromethane
n,n-Dimethylformamide	Tripropylenenglycol Methyl Ether

COD is a method for measuring the oxygen demand of wastewater. For the oil-bearing subcategories, EPA did not select COD for proposed regulation, but instead is proposing alternative parameters for measuring the oxygen demand of a wastewater. For the Oily Wastes subcategory, EPA is proposing a limit for Total Organic Carbon (TOC), an alternate method that measures all oxidizable organic material in a waste stream, including some organic chemicals not oxidized (and, therefore not detected) in the COD test. EPA chose TOC as an indicator parameter because of its ability to measure all types of organic pollutants and is found to be the best general indicator parameter for measuring the sum of organic compounds in an MP&M waste stream. For the Railroad Line Maintenance subcategory, EPA is proposing limitations for BOD_5 rather than COD, and for the Shipbuilding Dry Dock subcategory it has determined that the regulation of only O&G was necessary to control the removal of organic constituents.

EPA did not propose a limit for Total Petroleum Hydrocarbons (TPH) (as SGT-HEM) because it believes that the regulation of O&G (as HEM) and EPA's proposed organics control options will control the discharge of TPH (as SGT-HEM). The parameter Total Recoverable Phenolics will be controlled through the regulation of the Total Organics Parameter (TOP) which includes compounds such as phenol. EPA also believes that the list of 36 nonconventional organic compounds listed in Table 7-11 will be controlled through the regulation of TOP. The organic parameters that comprise the TOP are explained in more detail later in this section.

Table 7-12 presents 28 pollutants of concerns that are present in only trace amounts in the oil-bearing subcategories and/or are not likely to cause toxic effects. EPA determined that it was not necessary to propose limits for these metals listed because it detected these metals at low levels in its sampling of oil-bearing wastewater. As shown in Table 5-10, the average concentration at the influent to treatment for each of these metals is less than 0.1 mg/L.

Table 7-12

Pollutants Not Selected for Proposed Regulation for the Oil-Bearing Subcategories Because They Are Present in Only Trace Amounts and/or Are Not Likely to Cause Toxic Effects

Priority Metals	
Antimony	Cyanide
Arsenic	Mercury
Beryllium	Nickel
Cadmium	Selenium
Chromium	Silver
Copper	Thallium

Table 7-12 (Continued)

Nonconventional Metals	
Cobalt	Titanium
Gold	Vanadium
Molybdenum	Yttrium
Tin	
Nonconventional Organic	
Carbon Disulfide	
Other Nonconventional Pollutants	
Amenable Cyanide	Total Dissolved Solids
Ammonia as Nitrogen	Total Kjeldahl Nitrogen
Fluoride	Weak-Acid Dissociable Cyanide
Hexavalent Chromium	Ziram

EPA did not select the 7 pollutants of concern presented in Table 7-13 for proposed regulation in the oil-bearing subcategories because they may be used as treatment chemicals in the MP&M industry.

Table 7-13

Pollutants Not Selected for Proposed Regulation for the Oil-Bearing Subcategories Because They May Serve as Treatment Chemicals in the MP&M Industry

Nonconventional Metals	
Aluminum	Magnesium
Calcium	Sodium
Iron	
Other Nonconventional Pollutants	
Chloride	Sulfate

EPA did not select the 6 pollutants of concern presented in Table 7-14 for proposed regulation in the oil-bearing subcategories because they are not controlled by the selected BPT/BAT technology.

Table 7-14

Pollutants Not Selected for Proposed Regulation for the Oil-Bearing Subcategories Because They Are Not Controlled by the Selected BPT/BAT Technology

Priority Metal Pollutants	
Lead	Zinc
Nonconventional Metal Pollutants	
Barium	Manganese
Boron	
Other Nonconventional Pollutant	
Total Phosphorous	

In order to determine the pollutants proposed for regulation for each of the oil-bearing subcategories, EPA considered each of the remaining pollutants in Table 7-15 on a subcategory-by-subcategory basis. That is, after eliminating the pollutants listed in Tables 7-11 through 7-14 by analyzing all of the data for the oil-bearing subcategories combined, EPA then considered only data from each individual subcategory in order to determine the proposed regulated pollutants for each subcategory.

Table 7-15

49 Remaining Pollutants Considered for Proposed Regulation for the Oil-Bearing Subcategories

Conventional Pollutants	
BOD_5	Total Suspended Solids
Oil and Grease	
Other Nonconventional Pollutants	
Total Organic Carbon	Total Sulfide
Priority Organic Pollutants	
1,1,1-Trichloroethane	Di-n-Butyl Phthalate
1,1-Dichloroethane	Di-n-Octyl Phthalate
1,1-Dichloroethylene	Dimethyl Phthalate
2,4-Dimethylphenol	Ethylbenzene
2,4-Dinitrophenol	Fluoranthene

Table 7-15 (Continued)

2,6-Dinitrotoluene	Fluorene
2-Nitrophenol	Isophorone
4-Chloro-m-cresol	Methylene Chloride
Priority Organic Pollutants (continued)	
4-Nitrophenol	n-Nitrosodimethylamine
Acenaphthene	n-Nitrosodiphenylamine
Acrolein	Naphthalene
Anthracene	Phenanthrene
Benzyl Butyl Phthalate	Phenol
Bis(2-Ethylhexyl) Phthalate	Pyrene
Chlorobenzene	Tetrachloroethene
Chloroethane	Toluene
Chloroform	Trichloroethylene
Nonconventional Organic Pollutants	
1-Methylfluorene	Biphenyl
1-Methylphenanthrene	Carbon Disulfide
2-Isopropylnaphthalene	Dibenzofuran
2-Methylnaphthalene	Dibenzothiophene
3,6-Dimethylphenanthrene	n-Hexadecane
Aniline	n-Tetradecane
Benzoic Acid	p-Cymene

7.2.2.1 Oily Wastes Subcategory

For the direct dischargers in the Oily Wastes subcategory, EPA is proposing effluent limitations for all of the pollutants listed in Table 7-15 except for BOD_5. EPA is proposing an effluent limitation for O&G and TOC for this subcategory and therefore determined that BOD_5 would be controlled by the regulation of these parameters. For the organic parameters listed in Table 7-14, facilities in the Oily Wastes subcategory may choose from the following three options in order to comply with the regulation: comply with the limit for TOC; comply with the limit for TOP; or implement an organic pollutant management plan. Section 14 lists the effluent limitations for direct dischargers in the Oily Wastes subcategory.

7.2.2.2 Railroad Line Maintenance Subcategory

For the direct dischargers in the Railroad Line Maintenance subcategory, EPA is proposing effluent limitations for all of the pollutants listed in Table 7-15 except for TOC, total sulfide, and all of the priority and nonconventional pollutants (represented as TOP). EPA is proposing effluent limitations for O&G and BOD_5 for this subcategory and therefore determined that TOC and the priority and nonconventional organic pollutants would be controlled by the regulation of these parameters. EPA is not proposing an effluent limit for total sulfide in this subcategory because of the small quantity of this pollutant removed by proposed technology. EPA estimates that the regulation of total sulfide for the Railroad Line Maintenance subcategory would result in the removal of 7.3 lbs/year or less than 0.2 lbs/facility. Section 14 lists the effluent limitations for the direct dischargers in the Railroad Line Maintenance subcategory.

7.2.2.3 Shipbuilding Dry Dock Subcategory

For the direct dischargers in the Shipbuilding Dry Dock subcategory, EPA is proposing effluent limitations for all of the pollutants listed in Table 7-15 except for BOD_5, TOC, total sulfide, and all of the priority and nonconventional pollutants (represented as TOP). EPA is proposing effluent limitations for O&G for this subcategory and therefore determined that BOD_5, TOC, and the priority and nonconventional organic pollutants would be controlled by the regulation of O&G. EPA is not proposing an effluent limit for total sulfide in this subcategory because of the small quantity of this pollutant removed by the proposed technology. Many of the facilities in this subcategory already have treatment in place, and therefore, the MP&m rule achieves very little additional removal of total sulfide. EPA estimates that the regulation of total sulfide for the Shipbuilding Dry Dock subcategory would result in the removal of less than 1 lb/yr. Section 14 lists the effluent limitations for the direct dischargers in the Shipbuilding Dry Dock subcategory.

7.3 Pollutants Proposed to be Regulated for Indirect Dischargers

For indirect dischargers, before proposing national technology-based pretreatment standards, EPA examines whether the pollutants discharged by an industry “pass through” POTWs to waters of the U.S. or interfere with POTW operation or sludge disposal practices. Section 307(b) of the CWA requires EPA to promulgate pretreatment standards for existing sources (PSES) and new sources (PSNS). The Agency establishes pretreatment standards to ensure removal of pollutants that pass through or interfere with POTWs. EPA evaluated POTW pass-through for the MP&M pollutant parameters of concern listed in Tables 7-10 and 7-15.

Sections 7.3.2 and 7.3.3 discuss the results of the pass-through analysis for exiting and new sources, respectively.

7.3.1 Pass-through Analysis for Indirect Dischargers

Generally, to determine if pollutants pass through POTWs, EPA compares the percentage of the pollutant removed by well-operated POTWs achieving secondary treatment with the percentage of the pollutant removed by direct discharging industrial facilities applying BAT for that pollutant. The Agency determines that a pollutant "passes through" the POTW when the average percentage removed by POTWs nationwide is less than the percentage removed by direct discharging industrial facilities applying the BAT technology basis. In this manner, EPA can ensure that the combined treatment at indirect discharging facilities and POTWs is at least equivalent to that obtained through treatment by a direct discharger using BAT technology.

EPA compares removals for two reasons: (1) to ensure that wastewater treatment performance for indirect dischargers is equivalent to that for direct dischargers, and (2) to recognize and take into account the treatment capability and performance of the POTW in regulating the discharge of pollutants from indirect dischargers. Rather than compare the mass or concentration of pollutants discharged by POTWs with the mass or concentration of pollutants discharged by BAT facilities, EPA compares the percentage of the pollutants removed by BAT facilities to the POTW removals. EPA takes this approach because a comparison of the mass or concentration of pollutants in POTW effluents with pollutants in BAT facility effluents would not take into account the mass of pollutants discharged to the POTW from other industrial and non-industrial sources, nor the dilution of the pollutants in the POTW to lower concentrations from the addition of large amounts of other industrial and non-industrial water.

EPA conducted the pass through removal comparison on the priority and nonconventional metal pollutants regulated under BAT for each subcategory. The Agency did not perform this assessment for the regulated conventional pollutants, namely BOD_5, TSS, and O&G, since the conventional pollutants are generally not regulated under PSES and PSNS. EPA also did not perform the pass through analysis for the priority and nonconventional organic pollutants that comprise the TOP nor did it perform the analysis for TOC. Since EPA is proposing limitations for TOP and TOC as part of an organic indicator option for direct dischargers, the Agency also decided that it was appropriate to propose the same organic indicator alternatives for indirect dischargers. Similarly, the Agency did not perform the pass-through analysis for amenable cyanide. EPA is proposing a limit for direct dischargers for amenable cyanide as an alternative to total cyanide as a way to provide monitoring flexibility. The Agency decided that it was appropriate to propose the same cyanide monitoring alternatives for indirect dischargers as those proposed for directs, and therefore, it did not perform the pass-through analysis for amenable cyanide.

The primary source of the POTW percent removal data is the "Fate of Priority Pollutants in Publicly Owned Treatment Works" (EPA 440/1-82/303, September 1982), commonly referred to as the "50-POTW Study." This study presents data on the performance of 50 well-operated POTWs that employ secondary biological treatment in removing pollutants. Each sample was analyzed for three conventional, 16 non-conventional, and 126 priority toxic pollutants. EPA used

percent removals data from the 50-POTW Study for all of the pollutants for which EPA applied the pass-through analysis (i.e., those pollutants proposed for regulation at BAT).

In using the 50-POTW Study data to estimate percent removals, EPA has established data editing criteria for determining pollutant percent removals. Some of the editing criteria are based on differences between POTW and industry BAT treatment system influent concentrations. For many toxic pollutants, POTW influent concentrations were much lower than those of BAT treatment systems. For many pollutants, particularly organic pollutants, the effluent concentrations from both POTW and BAT treatment systems were below the level that could be found or measured. As noted in the 50-POTW Study, analytical laboratories reported pollutant concentrations below the analytical threshold level, qualitatively, as “not detected” or “trace,” and reported a measured value above this level. Subsequent rulemaking studies such as the 1987 OCPSF study used the analytical method nominal minimum level (ML) established in 40 CFR Part 136 for laboratory data reported below the analytical threshold level. Use of the nominal ML may overestimate the effluent concentration and underestimate the percent removal.

At the time of the 50-POTW sampling program, which spanned approximately 2.5 years (July 1978 to November 1980), EPA collected samples at selected POTWs across the U.S. The samples were subsequently analyzed by either EPA or EPA-contract laboratories using test procedures (analytical methods) specified by the Agency or in use at the laboratories. Laboratories typically reported the analytical method used along with the test results. However, for those cases in which the laboratory specified no analytical method, EPA was able to identify the method based on the nature of the results and knowledge of the methods available at the time.

Each laboratory reported results for the pollutants for which it tested. If the laboratory found a pollutant to be present, the laboratory reported a result. If the laboratory found the pollutant not to be present, the laboratory reported either that the pollutant was "not detected" or a value with a “less than” sign (<) indicating that the pollutant was below that value. The value reported along with the “less than” sign was the lowest level to which the laboratory believed it could reliably measure. EPA subsequently established these lower levels as the MLs of quantitation. In some instances, different laboratories reported different (sample-specific) MLs for the same pollutant using the same analytical method.

Because of the variety of reporting protocols among the 50-POTW Study laboratories (pages 27 to 30, 50-POTW Study), EPA reviewed the percent removal calculations used in the pass-through analysis for previous industry studies, including those performed when developing effluent guidelines for Organic Chemicals, Plastics, and Synthetic Fibers (OCPSF) Manufacturing, Centralized Waste Treatment (CWT), and Commercial Hazardous Waste Combustors. EPA found that, for 12 parameters, different analytical MLs were reported for different rulemaking studies (10 of the 21 metals, cyanide, and one of the 41 organics).

To provide consistency for data analysis and establishment of removal efficiencies, EPA reviewed the 50-POTW Study, standardized the reported MLs for use in the final rules for CWT and Transportation Equipment Cleaning Industries and for this proposed rule and the Iron and Steel proposed rule. A more detailed discussion of the methodology used and the results of the ML evaluation are contained in the MP&M public record.

Because the data collected for evaluating POTW percent removals included both effluent and influent levels that were close to the analytical detection levels, EPA devised hierarchal data editing criteria to exclude data with low influent concentration levels, thereby minimizing the possibility that low POTW removals might simply reflect low influent concentrations instead of being a true measure of treatment effectiveness.

EPA has generally used hierarchic data editing criteria for the pollutants in the 50-POTW Study. For the MP&M proposal, as in previous rulemakings, EPA used the following editing criteria:

1) Delete both influent and effluent data on a given date if either datum has a notation of analytical interference;

2) Substitute a pollutant-specific analytical “minimum level” for values “reported as “not detected,” “trace,” “less than [followed by a number],” or a number” less than the analytical minimum level established by the reporting laboratory;

3) Delete pollutants that have fewer than three pairs of data points (influent/effluent);

4) Delete pollutant influent and corresponding effluent values if the average pollutant influent level is less than 10 times the pollutant minimum level; and

5) If none of the average pollutant influent concentrations exceeded 10 times the ML, then delete average influent values less than 20 ：g/l or twice the ML (2XML) along with the corresponding average effluent values.

EPA then calculates each POTW percent removal for each pollutant based on its average influent and its average effluent values. The national POTW percent removal used for each pollutant in the pass-through test is the median value of all the POTW pollutant specific percent removals.

The rationale for retaining POTW data using the “10xML” editing criterion is based on the BAT organic pollutant treatment performance editing criteria initially developed for the 1987 OCPSF regulation (52 FR 42522, 42545-48; November 5, 1987). BAT treatment system designs in the OCPSF industry typically achieved at least 90 percent removal of toxic pollutants. Since most of the OCPSF effluent data from BAT biological treatment systems had values of “not detected,” the average influent concentration for a compound had to be at least 10 times the analytical minimum level

for the difference to be meaningful (demonstration of at least 90 percent removal) and qualify effluent concentrations for calculation of effluent limits.

EPA is evaluating several issues related to its traditional methodology for determining POTW performance and explains these issues in detail in Appendix A to this Section.

7.3.2 Pass-through Analysis Results for Existing Sources

For each of the MP&M subcategories, EPA calculated the percentage of a pollutant removed by BAT treatment systems using the median percent removal achieved by BAT facilities that it used for determining effluent limitations for direct dischargers. To determine pass-through, it compared this median percent removal for BAT facilities to the median percent removal determined from the 50-POTW database. Table 7-16 presents the results of the pass-through analysis for the metal-bearing wastewater subcategories.

Table 7-16

Pass-Through Analysis Results for Existing Sources for Metal-Bearing Wastewater Subcategories

Pollutant	Median BAT Percent Removal by Subcategory					Median POTW Percent Removal (c)
	General Metals	Metal Finishing Job Shops	Non-Chromium Anodizing	Printed Wiring Boards	Steel Forming and Finishing (b)	
Amenable Cyanide (a)	99.6	99.6	NA	99.6	99.6	57.4
Cadmium	92.2	98.8	NA	NA	92.2	90.1
Chromium	99	96.7	NA	99.0 (b)	99	80.3
Copper	95.8	95.9	NA	96.3	95.8	84.2
Cyanide (a)	99.1	99.1	NA	99.1	99.1	70.4
Lead	99.4	99.6	NA	99.4 (b)	99.4	77.5
Manganese	96.9	98.8	96.9 (b)	57.7	96.9	35.5
Molybdenum	64.7	64.7 (b)	NA	NA	64.7	18.9
Nickel	96.3	93.7	96.3 (b)	89.3	96.3	51.4
Silver	94.8	96.5	NA	NA	94.8	88.3
Tin	98.8	97.8	NA	98.1	98.8	42.6
Zinc	98	97.1	98.0 (b)	98.0 (b)	98	79.1

(a) EPA determined BAT percent removals for Total Cyanide using data from all subcategories.
(b) EPA transferred BAT percent removal from General Metals Subcategory.
(c) All POTW percent removals determined from 50-POTW Study.
NA = Pollutant not proposed for BAT regulation for the specific subcategory therefore pass through analysis does not apply.

EPA compared the BAT percent removals and the POTW percent removals shown in Table 7-16 and determined that all of these pollutants pass through POTWs. In addition to the pollutants listed in Table 7-16, EPA is proposing pretreatment standards for Total Sulfide for the General Metals, Metal Finishing Job Shops, Printed Wiring Board, and Steel Forming and Finishing subcategories. The Agency is proposing a limitation for total sulfide based on potential POTW interference or upset associated with discharges of this pollutant from MP&M facilities (i.e., through corrosion of pipes from formatting sulfuric acid or hazardous conditions to POTW employees from generation of hydrogen sulfide gas). EPA is also proposing pretreatment standards for TOC and TOP as part of a compliance alternative for organic pollutant discharges. See Section 15.2.6 for a discussion of the proposed monitoring alternatives for organic pollutants. Section 14 lists the pretreatment standards for the pollutants proposed for regulation for indirect dischargers in each of the subcategories.

For the three subcategories that generate primarily oil-bearing wastewater (Oily Wastes, Railroad Line Maintenance, and Shipbuilding Dry Dock), EPA is only establishing pretreatment standards for the Oily Wastes subcategory. For the reasons discussed in detail in Section 14, EPA is not proposing pretreatment standards for the Railroad Line Maintenance nor the Shipbuilding Dry Dock subcategories. For the Oily Wastes subcategory, EPA is proposing pretreatment standards for TOP, TOC and total sulfide. The Agency is proposing a limitation for total sulfide based on potential POTW interference or upset associated with discharges of this pollutant from MP&M facilities. EPA is also proposing pretreatment standards for TOC and TOP as part of a compliance alternative for organic pollutant discharges. See Section 15.2.6 for a discussion of the proposed monitoring alternatives for organic pollutants. Section 14 lists the pretreatment standards for the pollutants proposed for regulation for indirect dischargers in the Oily Wastes subcategory.

7.3.3 Pass-through Analysis Results for New Sources

For each of the MP&M subcategories, EPA calculated the percentage of a pollutant removed by NSPS treatment systems using the median percent removal achieved by NSPS facilities that it used for determining effluent limitations for new direct dischargers. To determine pass-through, it compared this median percent removal for NSPS facilities to the median percent removal determined from the 50-POTW database. Table 7-17 presents the results of the pass-through analysis for the metal-bearing wastewater subcategories:

Table 7-17

Pass-Through Analysis Results for New Sources for Metal-Bearing Wastewater Subcategories

Pollutant	Median NSPS Percent Removal by Subcategory					Median POTW Percent Removal (c)
	General Metals	Metal Finishing Job Shops	Non-Chromium Anodizing (d)	Printed Wiring Boards	Steel Forming and Finishing (d)	
Cadmium	99.8	99.8 (d)	NA	NA	99.8	90.1
Chromium	99.4	99.4 (d)	NA	99.4 (d)	99.4	80.3
Copper	97.8	97.8 (d)	NA	100	97.8	84.2
Cyanide (a)	99.1	99.1	NA	99.1	99.1	70.4
Lead	99.4 (b)	99.4 (b)	NA	99.1	99.4	77.5
Manganese	96.3	96.3 (d)	96.9 (b)	96.3 (d)	96.3	35.5
Molybdenum	64.7 (b)	64.7 (b)	NA	NA	64.7	18.9
Nickel	97.6	97.6 (d)	96.3 (b)	97.6 (d)	97.6	51.4
Silver	99.4	99.4 (d)	NA	NA	99.4	88.3
Tin	98.5	98.5 (d)	NA	98.9	98.5	42.6
Zinc	99.8	99.8 (d)	98.0 (b)	99.8 (d)	99.8	79.1

(a) EPA determined NSPS percent removals for Total Cyanide using data from all subcategories.
(b) EPA transferred BAT percent removal from General Metals Subcategory.
(c) All POTW percent removals determined from 50-POTW Study.
(d) EPA transferred NSPS percent removals from General Metals subcategory.
NA = Pollutant not proposed for NSPS regulation for the specific subcategory therefore pass through analysis does not apply.

EPA compared the NSPS percent removals and the POTW percent removals shown in Table 7-17 and determined that all of these pollutants pass through POTWs. In addition to the pollutants listed in Table 7-17, EPA is proposing pretreatment standards for new sources for Total Sulfide for the General Metals, Metal Finishing Job Shops, Printed Wiring Board, and Steel Forming and Finishing subcategories. The Agency is proposing a limitation for total sulfide based on potential POTW interference or upset associated with discharges of this pollutant from MP&M facilities (i.e., through corrosion of pipes from formation of sulfuric acid or hazardous conditions to POTW employees from generation of hydrogen sulfide gas). EPA is also proposing pretreatment standards for new sources for TOC and TOP as part of a compliance alternative for organic pollutant discharges. See Section 15.2.6 for a discussion of the proposed monitoring alternatives for organic pollutants. Section

14 lists the pretreatment standards for new sources for the pollutants proposed for regulation for indirect dischargers in each of the subcategories.

For the reasons described in Section 14, EPA is proposing pretreatment standards for new sources (PSNS) for the Oily Wastes subcategory equivalent to those proposed for existing sources. In addition, the Agency also explains in Section 14 its rationale for not proposing PSNS for the Railroad Line Maintenance and the Shipbuilding Dry Docks subcategories.

7.4 References

1. U.S. Environmental Protection Agency. The 1990 Industrial Technology Division List of Analytes. Washington, DC, May 1990.

2. U.S. Environmental Protection Agency. Development Document for the Centralized Waste Treatment Industry, December 1998.

3. U.S. Environmental Protection Agency. Fate of Priority Pollutants in Publicly Owned Treatment Works, EPA-440/1-82/303. Washington DC, September 1982.

Appendix A

Proposed Revisions to the Methodology Used to Determine POTW Performance for Toxic and Non-Conventional Pollutants

For the MP&M proposal, EPA used its traditional methodology to determine POTW performance (percent removal) for toxic and non-conventional pollutants. POTW performance is a component of the pass-through methodology used to identify the pollutants to be regulated for PSES and PSNS. It is also a component of the analysis to determine net pollutant reductions (for both total pounds and toxic pound-equivalents) for various indirect discharge technology options. However, as discussed in more detail below, EPA is considering revisions to its traditional methodology for determining POTW performance (percent removals) for toxic and non-conventional pollutants. In the traditional methodology, the pertinent data selection editing criteria used to determine POTW percent removals were based on the editing criteria used for industry data to calculate BAT limitations. However, since POTWs are designed to treat conventional pollutants, not toxic pollutants, the revised editing criteria would more accurately reflect the incidental removals of toxic pollutants in POTWs.

Background

Unlike direct dischargers whose wastewater will receive no further treatment once it leaves the facility, indirect dischargers send their wastewater streams to POTWs for further treatment. However, POTWs typically install secondary biological treatment systems which are designed to control conventional pollutants [biochemical oxygen demand (BOD), total suspended solids (TSS), oil & grease (O&G), pH, and fecal coliform] -- the principal parameters for characterizing domestic sewage. With the exception of nutrient control for ammonia and phosphorus, POTWs usually do not install specific technology (advanced or tertiary treatment) to control toxic and non-conventional pollutants, although incidental removals in secondary biological treatment systems may be significant for some toxic pollutants. Instead, the Clean Water Act envisions that, through implementation of pretreatment programs and industrial compliance with categorical pretreatment standards, toxic and non-conventional pollutants in municipal effluents will be controlled adequately.

Therefore, for indirect dischargers, before proposing national technology-based pretreatment standards, EPA examines whether the pollutants discharged by an industry “pass through” POTWs to waters of the U.S. or interfere with POTW operation or sludge disposal practices. Generally, to determine if pollutants pass through POTWs, EPA compares the percentage of the pollutant removed by well-operated POTWs achieving secondary treatment with the percentage of the pollutant removed by direct discharging industrial facilities applying BAT for that pollutant. A pollutant is determined to “pass through” the POTW when the average percentage removed by POTWs nationwide is less than the percentage removed by direct discharging industrial facilities applying the BAT technology basis. In this manner, EPA can ensure that the combined treatment at indirect

discharging facilities and POTWs is at least equivalent to that obtained through treatment by a direct discharger using BAT technology.

For specific pollutants, such as volatile organic compounds, EPA may use other means to determine pass-through. These evaluations may include chemical and physical properties (e.g., Henry's Law constants, octanol/water partition coefficients, and water solubility constants) and empirical data to estimate amounts of volatilization, biodegradation, and/or partitioning to the residue solids phase.

Traditional Methodology for Determination of POTW Percent Removals

The primary source of the POTW data is the "Fate of Priority Pollutants in Publicly Owned Treatment Works" (EPA 440/1-82/303, September 1982), commonly referred to as the "50-POTW Study." At most of these POTWs, EPA collected a minimum of 6 days of 24-hour composite influent and effluent wastewater samples. EPA analyzed each sample for the conventional pollutants (excluding fecal coliform), selected non-conventional pollutants, and the 126 priority pollutants. The conventional pollutants, listed at 40 CFR 401.16, are BOD_5,TSS, O&G, pH, and fecal coliform. The selected non-conventional pollutants included chemical oxygen demand, total organic carbon, total phenols, ammonia nitrogen, iron, aluminum, and magnesium, among several others. The priority pollutants consist of the 126 compounds (listed in Appendix A of 40 CFR Part 423) that are a subset of the 65 toxic pollutants and classes of pollutants referred to in Section 307(a) of the Clean Water Act and listed at 40 CFR 401.15. A total of 102 of the 126 priority toxic pollutants were detected at least once in POTW influents (page 1, 50-POTW Study).

In using the 50-POTW Study data to estimate percent removals, EPA established data editing criteria for determining pollutant percent removals. Some of the editing criteria are based on differences between POTW and industry BAT treatment system influent concentrations. For many pollutants, POTW influent concentrations were much lower than those of BAT treatment systems. For many pollutants, particularly organic pollutants, the effluent concentrations from both POTW and BAT treatment systems, were below the level that could be found or measured. As noted in the 1982 50-POTW Study, analytical laboratories reported pollutant concentrations below the analytical minimum level , qualitatively, as "not detected" or "trace," and reported a measured value above this level (pages 27 to 30). Subsequent rulemaking studies such as the 1987 OCPSF study used the analytical method "minimum level" (ML) established in 40 CFR Part 136 for laboratory data reported below the analytical threshold level. Use of the ML may overestimate the effluent concentration and underestimate the percent removal. (If the actual effluent concentration is less than the ML, then the calculated percent removal based on the actual value would be higher.) Because the data collected for evaluating POTW percent removals included both effluent and influent levels that were close to the analytical MLs, EPA devised hierarchal data editing criteria to exclude data with low influent concentration levels, thereby minimizing the possibility that low POTW removals might simply reflect low influent concentrations instead of being a true measure of treatment effectiveness.

EPA has generally used the following hierarchic data editing criteria[1] for the pollutants in the 50-POTW Study:

1) Delete both influent and effluent data on a given date if either datum has a notation of analytical interference,

2) Substitute a pollutant-specific analytical "minimum level" for values reported as "not detected", "trace", "less than [followed by a number]", or a number less than the analytical minimum level established by the reporting laboratory,

3) Delete pollutants that have fewer than three pairs of data points (influent/effluent),

4) Delete pollutant influent and corresponding effluent values if the average pollutant influent level is less than 10 times the pollutant ML, and

5) If none of the average pollutant influent concentrations exceeded 10xML, then delete average influent values less than 20 ：g/l or twice the minimum level (2xML) along with the corresponding average effluent values.

EPA then calculated each POTW percent removal for each pollutant based on its average influent and its average effluent values. The POTW percent removal used for each pollutant in the pass-through test was the median value of all the POTW pollutant specific percent removals.

The rationale for retaining POTW data using the "10 times the pollutant minimum level" editing criterion was based on the BAT organic pollutant treatment performance editing criteria initially developed for the 1987 organic chemicals, plastics, and synthetic fibers (OCPSF) regulation (40 CFR Part 414; 52 FR 42522 at 42545 to 48). BAT treatment system designs in the OCPSF industry typically achieved at least 90 percent removal of toxic pollutants. Since most of the OCPSF effluent data from BAT biological treatment systems had values of "not detected,"[2] the average influent concentration for a compound had to be at least 10 times the analytical ML for the difference to be meaningful (demonstration of at least 90 percent removal) and qualify effluent concentrations for calculation of effluent limits ("OCPSF DD," Vol. I, page VII-183).

---

[1] These 50-POTW Study data editing criteria may vary among effluent guideline development studies.

[2] Of the 57 regulated organic pollutants, limits for 34 (60 percent) were based on long-term averages of "not detected" or the analytical minimum level ("Development Document for Effluent Limitations Guidelines and Standards for the Organic Chemicals, Plastics, and Synthetic Fibers Point source Category" – the "OCPSF DD," (EPA 440/1-87/009), October 1987, Vol. I, pages VII-208 to VII-210).

Review of the 50-POTW Study Analytical Laboratory Reporting Practices and Standardization of Minimum Level Values

At the time of the 50-POTW sampling program which spanned approximately 2 ½ years (July 1978 to November 1980), EPA collected samples at selected POTWs across the U.S. The samples were subsequently analyzed by either EPA or EPA-contract laboratories using test procedures (analytical methods) specified by the Agency or in use at the laboratories. Laboratories typically reported the analytical method used along with the test results. However, for those cases in which the laboratory specified no analytical method, EPA was able to specify the method based on the nature of the results and knowledge of the methods available at the time.

To provide consistency for data analysis and establishment of removal efficiencies, EPA reviewed the 50-POTW Study, standardized the reported MLs for use in the CWT final rule and the MP&M proposal. EPA standardized the MLs based on information about the analytical methods used, laboratory capabilities at the time the testing was conducted (1978 to 1980), MLs that had been achievable historically, and consultation with Agency experts in the field of analytical chemistry. The standardized MLs are used in this reassessment.

Reassessment of the Pass-Through Methodology and Revised Editing Criteria

The Agency has reevaluated several aspects of the 50-POTW Study data base editing process and is considering changes to the editing criteria. Several minor editing criteria changes that EPA is considering for use in the final MP&M pretreatment standard including those related to the presence of analytical interferences, missing data, reported greater-than values, and reported less-than values higher than the MLs are described in Appendix B, “Revised Data Conventions for the 50-POTW Study Analytical Data.” To compare the proposed changes to the traditional editing criteria used for the MP&M proposal, additions to the criteria are highlighted as “(New)” and revisions to existing criteria are highlighted as “(Revised).”

The principal editing criterion of the pass-through analysis used for the MP&M proposal -- using available performance data representing average influent concentrations 10 times the analytical ML. This is also the primary editing criteria for ensuring that promulgated effluent limitations guidelines and standards are based only on the performance of BAT wastewater treatment systems with meaningful influent concentrations of pollutants. This editing criterion ensures that BAT data would demonstrate at least 90 percent removal of toxic pollutants. EPA selected this criterion for the POTW data for similar reasons. However, after reconsidering the design differences between industrial BAT treatment and POTW treatment systems as well as the differences in toxic pollutant influent concentrations, EPA believes that the “10xML” editing criterion is too restrictive for the purpose of analyzing POTW data, especially where effluent values are above the ML.

The majority of discharging POTWs (67 percent) have installed secondary biological treatment systems[3] designed to treat conventional pollutants characteristic of domestic sewage (primarily BOD_5 and TSS). Most POTWs with secondary treatment have installed a variation of the activated sludge biological process with typical wastewater hydraulic residence times ranging from 4 to 8 hours for the most prevalent process designs.[4] Very few secondary POTWs install unit operations specifically designed to remove toxic and non-conventional pollutants.[5]

In contrast, depending on raw waste characteristics, industrial treatment systems are often designed to remove toxic pollutants using a wide variety of in-plant wastewater treatment unit operations with or without end-of-pipe secondary biological treatment systems and sometimes followed by tertiary controls. For example, plants in the MP&M, electroplating, iron and steel, OCPSF, inorganic chemicals, landfills, commercial hazardous waste combustor, centralized waste treatment and other industries may use in-process or end-of-pipe chemical precipitation for metals control, alkaline chlorination for cyanide control, steam or air stripping for volatile organic pollutant control, and activated carbon or biological treatment for control of a wide variety of organic pollutants. For plants in the OCPSF industry with end-of-pipe secondary biological treatment systems, the median and average wastewater hydraulic residence times are 48 and 118 hours, respectively.[6] Most of the pollutant-specific treatment unit operations listed above are not used to treat POTW wastewater because of the relatively low influent toxic pollutant concentrations. POTW toxic pollutant influent concentrations are often orders of magnitude lower than industrial raw waste concentrations.

Because of these design and toxic pollutant influent concentration differences, the POTW data editing criteria should reflect typical incidental removals of toxic pollutants in secondary biological treatment systems designed and operated to control municipal sewerage. In general, due to

---

[3] The 1996 Clean Water Needs Survey found that of the 13,992 discharging POTWs, 1.3 percent reported less than secondary treatment, 67.1 percent reported secondary treatment, and the remaining 31.6 percent reported better than secondary treatment (www.epa.gov/owm/uc.htm at Appendix C).

[4] Hydraulic residence times for the conventional and tapered aeration activated sludge processes range from 4 to 8 hours; for the step aeration and contact stabilization processes, from 3 to 6 hours; for the modified and high-rate aeration processes, from 0.5 to 3 hours; and for the extended aeration process, from 18 to 36 hours (1992 WEF Manual of Practice No. 8, page 627, Vol. I).

[5] Typical POTW unit operations include preliminary treatment (screening and grit removal), primary treatment (sedimentation, sludge collection, and odor control), and secondary treatment (biological treatment with secondary clarification). POTW unit operations associated with advanced or tertiary treatment include nutrient controls (phosphorus and nitrogen [including ammonia] removal processes), multi-media filtration, and activated carbon (1992 WEF Manual of Practice No. 8, pages 389, 447, 517, and 675, Vol. I and pages 895 and 1013, Vol. II).

[6] Based on 31 OCPSF biological treatment systems with residence times ranging from 4.5 to 1,008 hours ("Development Document for Effluent Limitations Guidelines and Standards for the Organic Chemicals, Plastics, and Synthetic Fibers Point source Category," (EPA 440/1-87/009), October 1987, Vol. II, page VIII-45 and "Supplement to the Development Document for Effluent Limitations Guidelines and Standards for the Organic Chemicals, Plastics, and Synthetic Fibers Point source Category," (EPA 821-R-93-007), May 1993, pages III-20 to 23).

dilution in municipal sewer collection systems, POTW influent concentrations of toxic pollutants are lower than the influent concentrations of industrial treatment systems. In those cases where both industrial and municipal treatment systems reduce the effluent pollutant concentration to the analytical ML, the relative performance – percent removal -- is primarily a function of the influent concentrations. This was the principal reason for initially using the "10xML" influent editing criterion for retaining POTW average performance data – to avoid the bias of calculating artificially low median percent removals (median of POTW average performance). However, this editing criterion, when applied to the 50-POTW Study data, overestimates POTW incidental removals for many toxic pollutants. In the 50-POTW Study data base, there are many cases where POTW average influent concentrations are less than the "10xML" editing criterion and the average effluent data are above the ML. These cases should be included in the calculation of national POTW performance (median of POTW average percent removals) because they accurately reflect the incidental removals of the toxic pollutants in treatment systems primarily designed for the control of conventional pollutants. For example, for many POTWs in the study, average metal pollutant influent concentrations less than "10xML" are paired with average effluent concentrations where each data point is measured above the analytical ML. Because of these pairings, EPA can accurately calculate the incidental removals of toxic pollutants characteristic of POTW designs and the characteristically low POTW toxic pollutant influent concentrations. EPA believes it is reasonable to include these percent removal calculations in its pass-through analysis.

Furthermore, one of the observations and conclusions in the 50-POTW Study was that for many pollutants, "as influent concentrations increased effluent concentrations also increased. This implies that the removal rates for the priority pollutants are relatively constant and a fixed percentage of incremental loadings of these pollutants will be removed by secondary treatment." Therefore, except for highly biodegradable compounds, for typical POTW secondary biological treatment designs without specific unit operations for toxic pollutant control, one would not necessarily expect the percent removals of toxic pollutants to increase (above incidental removal levels) as influent concentrations increased.

Assessment of Editing Criteria for 50-POTW Performance by Treatment Technology

EPA is also considering incorporating POTW treatment system and BOD_5/TSS performance editing criteria into the methodology for determining POTW performance (percent removal) for toxic and non-conventional pollutants.

A major goal of the 50-POTW study was to obtain toxic priority pollutant data from representative types of secondary treatment facilities that would exist after completion of EPA's Construction Grants program. The 50 POTWs selected for sampling are representative of biological treatment processes – 35 activated sludge, 8 trickling filter, 4 activated sludge with parallel trickling filter, 1 rotating biological contactor, 1 aerated lagoon, and 1 lagoon system. Eight of these POTWs include post-secondary or tertiary treatment (4 filtration and 4 lagoon systems).

The 50-POTW Study and subsequent assessments of POTW performance (including the assessment for the MP&M proposal) used combined end-of-pipe data for all 50 POTWs. The analyses did not assess potential differences in toxic pollutant reductions among the various types of secondary systems, between secondary and tertiary systems, and among different levels of BOD_5 and TSS control (the principal design basis for POTW treatment systems).

After publication of the 50-POTW Study, EPA promulgated its Secondary Treatment Regulation (40 CFR Part 133) to provide information on the level of effluent quality attainable through the application of secondary or equivalent treatment. Secondary treatment generally refers to activated sludge biological processes and treatment equivalent to secondary treatment refers to trickling filters or waste stabilization ponds. The secondary treatment performance criteria for both BOD_5 and TSS are 30-day and 7-day averages not exceeding 30 mg/l and 45 mg/l, respectively. The BOD_5 and TSS criteria for equivalent secondary treatment for both BOD_5 and TSS are 30-day and 7-day averages not exceeding 45 mg/l and 65 mg/l, respectively. These definitions and treatment levels provide the basis for the technology and BOD_5/TSS performance edits being proposed for use in the final rule.

The revised analyses under consideration include separating the data collected for the 4 parallel activated sludge and trickling filter systems and, for 2 of the tertiary systems, including the secondary activated sludge sampling data. This expands the performance data base to 56 POTW treatment trains – 41 activated sludge, 12 trickling filter, 1 rotating biological contactor, 1 aerated lagoon, and 1 lagoon system. Again, 8 of these treatment trains include secondary or tertiary treatment (4 filtration and 4 lagoon systems). Based on the definitions in 40 CFR Part 133, the POTW treatment trains consist of 47 secondary or equivalent systems, 1 rotating biological contactor, and 8 post-secondary or tertiary systems. The Agency is considering a variety of POTW treatment train and BOD_5/TSS performance editing criteria to determine if these factors significantly affect the incidental removals of toxic and non-conventional pollutants in POTWs. For example, among other alternatives, EPA is considering editing criteria that would retain only those secondary or equivalent treatment trains and the rotating biological contactor treatment train that meet the BOD_5/TSS 7-day average performance criteria. EPA is considering this alternative because it accounts for the fact that only 6 days of data were collected at each POTW.

Revised Editing Criteria for Determining POTW Performance

Based on these concerns, EPA is considering revising the POTW toxic and non-conventional pollutant performance (percent removal) editing criteria. Given the range of analytical MLs[7] and their influence on calculated percent removals as well as the range of in-place POTW treatment technology, EPA is considering several editing alternatives including:

[7] For most organic pollutants, the ML is 10 µg/l (several have MLs of 20 and 50 µg/l). For mercury, silver, cadmium, zinc, copper, nickel, lead, and barium, the respective MLs are 0.2, 2, 5, 20, 25, 40, 50, and 200 µg/l.

Alternative A – For POTW treatment trains that meet the 7-day conventional pollutant performance criteria for BOD_5 (45 mg/l or lower) and TSS (45 mg/l or lower) using secondary activated sludge biological treatment or its equivalent:

1. If all effluent values are equal to the ML and the ML is less than or equal to 20 µg/l, retain the pollutant performance (percent removal) if the pollutant influent average is at least ten times the nominal minimum level (10xML).

2. If all effluent values are equal to the ML and the ML is greater than 20 mg/1, retain the pollutant performance (percent removal) if the pollutant influent average is at least ten times one-half the nominal minimum level [10 x (0.5xML) or 5 x ML].

3. If the effluent average is greater than the ML, retain the pollutant performance (percent removal) regardless of the pollutant influent average.

4. The national POTW/pollutant percent removal is the median of the retained values from 1, 2, and 3 above.

Alternative B -- The same as Alternative A for items Al, A2, and A4 with the following modification to item A3: If the effluent average is greater than the ML, retain the pollutant performance (percent removal) if the pollutant influent average is at least two times the nominal minimum level (2xML). Based on the analyses conducted to date, this is the Agency's preferred alternative.

Alternative C – Retain all toxic pollutant data for POTW treatment trains that meet the 7-day conventional pollutant performance criteria for BOD_5 (45 mg/l or lower) and TSS (45 mg/l or lower) using secondary activated sludge biological treatment or its equivalent.

Alternative D -- The same as Alternative B with the following modifications: (a) Retain POTW treatment trains with secondary biological treatment (as designated by treatment flag "S"), only if both the effluent BOD_5 and TSS average concentrations are less than or equal to 45 mg/l. (b) Retain POTW treatment trains with equivalent to secondary biological treatment (as designated by treatment flag "E"), only if both the effluent BOD_5 and TSS average concentrations are less than or equal to 65 mg/l.

Alternative E -- The same as Alternative D with the following modification: substitute 0.5XML for all data points set equal to the analytical ML.

Table A-1 lists the national POTW percent removals for several pollutants, determined by using the traditional methodology for the proposal (Column 2), Alternative A (Column 3), Alternative B (Column 4), Alternative C (Column 5), Alternative D (Column 6), and Alternative E

(Column 7). For the proposal, EPA has used the traditional methodology to estimate POTW percent removals, and, therefore, whether these pollutants "pass through" for purposes of selecting pollutants for regulation by PSES and PSNS. EPA solicits comments on its pass-through methodology, including the revised editing criteria discussed above as well as for other alternatives.

Assessment of the Use of Analytical Minimum Levels

Since some commenters have concerns that EPA's use of the ML for reported effluent data of <ML underestimates actual percent removal, EPA tried to determine the extent of this situation and possible effects on estimating POTW percent removals for the pass through analysis. The assessment below indicates that the proportion of POTW not-detected effluent toxic pollutant data varies from pollutant to pollutant and from POTW to POTW.

To help characterize the effect of substituting the analytical ML for not-detected data, the Agency assigned each POTW/pollutant data set to one of three groups based on the proportion of not-detected effluent values, as follows:

1. All ND -- when all of the effluent data points were not detected or assigned the ML value for the pollutant,

2. All NC (non-censored) – when all of the effluent data points were measured concentrations above the ML for the pollutant, and

3. Mix (NC & ND) – when the effluent data points were a mixture of not-detect and measured values.

For those cases where all of the effluent data were non-censored, the calculated percent removal reflects POTW incidental removals with the most accuracy. For those cases where all the effluent data were not detected, the calculated percent removal reflects POTW incidental removals with the least accuracy. In those cases where the effluent data is a mixture of not detected and non-censored data, the calculated percent removals are probably more accurate than "All ND" but less accurate than "All NC". Table A-2 provides pollutant-by-pollutant tabulations for the number of POTWs retained by the Alternative D data conventions with counts of the POTWs effluent data sets that fall into each category.

For the 21 metal pollutants retained by the Alternative D data conventions, about 97 percent of the 347 POTW/metal pollutant effluent data sets in the table are comprised of all NC (66 percent) and a mixture of NC & ND (31 percent) values. For ammonia and cyanide, 100 percent of the 65 data sets are comprised of all NC (99.5 percent) and a mixture of NC & ND (0.5 percent) values.

The 28 organic pollutants retained by the Alternative D data conventions were divided into low, medium, and high Henry's Law Constant groups. For the six organics with low Henry's Law Constants (10^{-3} to 10^{-8}), about 81 percent of the 38 POTW/organic pollutant effluent data sets in the table are comprised of all NC (18 percent) and a mixture of NC & ND (63 percent) values. For the nine organics with medium Henry's Law Constants (10^{-1} to 10^{-3}), about 83 percent of the 36 POTW/organic pollutant effluent data sets in the table are comprised of all NC (25 percent) and a mixture of NC & ND (58 percent) values. For the 13 organics with high Henry's Law Constants ($2x10^{2}$ to 10^{-1}), about 83 percent of the 73 POTW/organic pollutant effluent data sets in the table are comprised of all NC (19 percent) and a mixture of NC & ND (64 percent) values.

The Agency concludes that POTW performance for metals, ammonia, cyanide, and organic pollutants is not significantly affected by the bias of effluent data being less than the MLs.

Table A-1 – Comparison of 50-POTW Study Removal Estimation Alternatives (Median Percent Removals)

Pollutant Parameter	Traditional Method %	Alternative A %	Alternative B %	Alternative C %	Alternative D %	Alternative E %	Analytical ML µg/l
Ammonia	39	40	40	40	39	39	10
Cyanide	70	65	66	60	65	65	20
Antimony	67	47	57	10	57	57	20
Cadmium	90	86	89	37	89	89	5
Chromium	80	76	77	76	76	77	10
Copper	84	80	80	80	79	80	25
Iron	82	82	82	82	80	82	100
Lead	77	48	57	55	57	69	50
Manganese	36	24	24	24	23	23	15
Mercury	90	63	63	60	61	73	0.2
Nickel	51	28	29	32	29	29	40
Silver	88	67	69	69	67	73	2
Tin	43	20	41	39	41	47	30
Zinc	79	77	77	77	76	76	20
Naphthalene	95	95	95	39	95	97	10
Phenol	95	95	96	70	96	97	10

Table A-2 - Number of POTWs Retained by Alternative D Data Conventions

Analyte	CAS No.	Total Number POTWs	Effluent "All NC"	Effluent Mix (NC and ND)	Effluent "All ND"
Class=Metals, Tech Group=E or S					
Aluminum	7429905	31	11	16	4
Antimony	7440360	1	1	0	0
Boron	7440428	6	4	2	0
Cadmium	7440439	6	2	4	0
Calcium	7440702	36	35	1	0
Chromium	7440473	34	23	11	0
Cobalt	7440484	1	0	1	0
Copper	7440508	34	13	17	4
Iron	7439896	43	34	9	0
Lead	7439921	7	2	4	1
Magnesium	7439954	22	22	0	0
Manganese	7439965	40	38	2	0
Mercury	7439976	15	4	11	0
Molybdenum	7439987	2	1	1	0
Nickel	7440020	14	9	5	0
Silver	7440224	17	5	12	0
Sodium	7440235	21	21	0	0
Tin	7440315	3	1	2	0
Titanium	7440326	10	1	9	0
Vanadium	7440622	2	2	0	0
Yttrium	7440655	2	0	2	0
Total		**73**	**14**	**47**	**12**

Table A-2 (Continued)

Analyte	CAS No.	Total Number POTWs	Effluent "All NC"	Effluent Mix (NC and ND)	Effluent "All ND"
Class=Nonconventional, Tech Group=E or S					
Ammonia as N	7664417	35	35	0	0
Total Cyanide	57125	30	27	3	0
Total		**65**	**62**	**3**	**0**
Class=Organics_LOW, Tech Group=E or S					
Bis(2-ethylhexyl)phthalate	117817	25	6	19	0
Butyl benzyl phthalate	85687	1	0	0	1
Di-n-butyl phthalate	84742	2	0	2	0
Di-n-octyl phthalate	117840	2	0	2	0
Fluoranthene	206440	1	0	1	0
Phenol	108952	7	1	0	6
Total		**38**	**7**	**24**	**7**
Class=Organics_MED, Tech Group=E or S					
Acenaphthene	83329	2	0	1	1
Anthracene	120127	2	0	1	1
Methylene chloride	75092	22	7	15	0
Naphthalene	91203	1	0	0	1
Phenanthrene	85018	2	0	1	1
1,2-Dichlorobenzene	95501	2	0	1	1
1,2-Dichloroethane	107062	2	2	0	0
1,2-Dichloropropane	78875	1	0	0	1
1,2,4-Trichlorobenzene	120821	2	0	2	0
Total		**36**	**9**	**21**	**6**

Table A-2 (Continued)

Analyte	CAS No.	Total Number POTWs	Effluent "All NC"	Effluent Mix (NC and ND)	Effluent "All ND"
Class=Organics_HIGH, Tech Group=E or S					
Benzene	71432	5	0	2	3
Chlorobenzene	108907	1	0	0	1
Chloroform	67663	5	2	3	0
Chloromethane	74873	2	0	2	0
Dichlorodifluoromethane	75718	1	1	0	0
Ethylbenzene	100414	5	0	5	0
Tetrachloroethene	127184	15	4	9	2
Tetrachloromethane	56235	1	1	0	0
Toluene	108883	11	0	9	2
Trans-1,2-Dichloroethene	156605	2	0	2	0
Trichlorethene	79016	10	4	4	2
Vinyl chloride	75014	1	0	1	0
1,1,1,-Trichloroethane	71556	14	2	10	2
Total		**347**	**229**	**109**	**9**

Source: U.S. EPA, 50-POTW Study, 1982.

Tech Group E = POTWs that achieve effluent BOD_5/TSS concentrations less than or equal to 65 mg/l.
Tech Group S = POTWs that achieve effluent BOD_5/TSS concentrations less than or equal to 45 mg/l.
Class Organics_LOW = Organics with Henry's Law Constant between 10^{-8} and 10^{-3}.
Class Organics_MED = Organics with Henry's Law Constant between 10^{-3} and 10^{-1}.
Class Organics_HIGH = Organics with Henry's Law Constant between 10^{-1} and $1x10^{2}$.

Appendix B

Revised Data Conventions for the "50-POTW Study" Analytical Data

1. (New) Applied an alpha-numeric naming convention to identify parallel treatment trains within a POTW. The naming convention is composed of the POTW's number and a suffix. For example, POTW 10 has two parallel treatment trains. The applied convention designates these trains as 10A and 10B. Records associated with treatment train "A" in POTW 10 all carry the designation 10A. If a POTW has only one treatment train, then, with one exception, all records for the POTW are identified by the POTW number. No suffix is applied. In the case of POTW 56, a sampling point is designated after primary clarification (56A) and after tertiary filtration (56B). Samples were not collected after the secondary activated sludge treatment unit. The traditional data conventions – used for the MP&M proposal -- averaged all of the respective influent and effluent values for parallel treatment systems.

2. (New) Added treatment technology codes and technology flags. Treatment Technology codes include "AS" for activated sludge, "TF" for trickling filter, "RBC" for rotating biological contactor, lagoon, and primary clarifier. Some POTWs use a combination of treatments such as AS + tertiary oxidation ponds. When treatment technologies are used in combination, the combination is identified. Technology flags are: "P" for primary treatment; "S" for secondary biological treatment; "E" for equivalent to secondary biological treatment; and "T" for secondary biological or equivalent treatment systems with tertiary treatment unit operations.

3. This placeholder ensures consistency between the computer output headings and these data conventions. (The numbered statements correspond to preliminary drafts of the revised data conventions. Some data conventions contained in earlier drafts were mistaken or misplaced in sequence and EPA removed these conventions from subsequent drafts. However, EPA retained the assigned number sequence because of reference to these numbers in the computer listings. Thus, this number is effectively blank.)

4. Converted the units of measure for each pollutant to a common metric.

5. (Revised) Deleted individual data points for a pollutant if supporting records indicated that one of the following conditions was met (corresponding to key codes 4, 5, 6, and 8 described at the end of this appendix):

a. Analytical interference prevented the determination of the presence or quantification of the pollutant (key code = 4),

b. Analytical interference was indicated, but the pollutant concentration was not recorded above the concentration reported (key code = 5),

c. No chemical analysis was conducted or the result of the chemical analysis was not reported (key code = 6), and

d. The pollutant was qualitatively present but not quantified or confirmed (key code = 8).

e. (Revised) Deleted the record results from a "right censored" qualitative method. These records are identified as "greater-than (>) X" where "X" is a method specific value. This indicator signifies that the recorded measure is the lower bound of the amount of the pollutant in the sample. The traditional data conventions – used for the MP&M proposal -- reported ">values" as the value. (If calculations are based on influent ">values," then the percent removals would be lower than they should be. If calculations are based on effluent ">values," then the percent removals would be higher than they should be.)

The revised data conventions delete pollutant concentration data points on an individual basis, not in pairs. For example, if the influent data point meets one of the previously identified conditions, it is deleted. Its paired effluent data point is not deleted unless it too meets one of the conditions. The traditional data conventions deleted data in daily pairs.

6. Incorporated the standardized analytical "minimum level" (ML) values for each record. These values were assigned based on a determination of the analytical method employed and the precision and accuracy of the 1978 to 1980 analytical methods used to measure the pollutant.

7. (Revised) Deleted records reported as "< values" that are greater than the ML. This may occur when samples are diluted to reduce analytical matrix interference. If a pollutant is not detected in the diluted sample, the resulting ML is multiplied by the dilution factor. (For data reported as "< values," this rule initially set the value to the ML for calculation purposes without considering if the value is greater than the ML. For influent value substitutions, the traditional editing rule decreases calculated performance. For effluent value substitutions, it increases calculated performance.)

8. Set equal to the pollutant analytical ML, any remaining pollutant values reported as non-detect (key codes 1, 3, 1nd 7):

   a. Less than the concentration listed (key code = 1),

   b. Detected, but not quantified at lower than the concentration listed (key code = 3), and

   c. “Not-detected” (key code = 7),

9. For detected or non-censored (NC) values reported as less than the ML, set the value equal to the ML and report the value as a non-detect.

10. (New) If the pollutant ML is GREATER THAN 20, substituted 0.5xML for influent and effluent samples if all effluent values are equal to the ML and the value was a non-detect. The following pollutants are excluded from this convention: BOD_5, COD, O&G, TDS, TOC, Total Solids, and TSS.

11. Retain pollutant data for a POTW if there are at least three (3) influent concentration values reported and at least one of the reported influent values is measured above the ML for the pollutant.

12. This placeholder ensures consistency between the computer output headings and these data conventions. (The numbered statements correspond to preliminary drafts of the revised data conventions. Some data conventions contained in earlier drafts were mistaken or misplaced in sequence and EPA removed these conventions from subsequent drafts. However, EPA retained the assigned number sequence because of reference to these numbers in the computer listings. Thus, this number is effectively blank.)

13. (New) Retain POTW treatment trains with secondary biological treatment or equivalent (as designated by treatment flags “S” or “E”, only if both the effluent BOD_5 and TSS average concentrations are less than or equal to 45 mg/l.

14. (Revised) Retain non-negative percent removals that are greater than zero for a given pollutant where the percent removal = (100)(ave influent - ave effluent)/ave influent. The traditional data conventions retained zero percent removals. (The medians of these intermediate values are referred to as Alternative C.)

15. Identify three (overlapping) subsets of POTWs based on the average influent concentration:

a. (i.) If all effluent values are equal to the ML and the ML is greater than 20 ppb, retain the pollutant performance (percent removal) if the pollutant influent average is at least ten times one-half the nominal minimum level [10x(0.5xML) = 5xML].

(ii) If all effluent values are equal to the ML and the ML is less than or equal to 20 ppb, retain the pollutant performance (percent removal) if the pollutant influent average is at least ten times the nominal minimum level (10 x ML).

b. If the effluent average is greater than the ML, retain the pollutant performance (percent removal) regardless of the pollutant influent average.

16. The national POTW/pollutant percent removal is the median of the retained values from 15A and 15B above. (This is referred to as Alternative A.)

17. Modify 15B: If the effluent average is greater than the ML, retain the pollutant performance (percent removal) if the pollutant influent average is at least two times the nominal minimum level (2xML).

18. Modify 16: The national POTW/pollutant percent removal is the median of the retained values from 15A and 17 above. (This is referred to as Alternative B.)

19. Modify 13: (a) Retain POTW treatment trains with secondary biological treatment (as designated by treatment flag “S”), only if both the effluent BOD_5 and TSS average concentrations are less than or equal to 45 mg/l. (b) Retain POTW treatment trains with equivalent to secondary biological treatment (as designated by treatment flag “E”), only if both the effluent BOD_5 and TSS average concentrations are less than or equal to 65 mg/l. (c) The national POTW/pollutant percent removal is the median of the retained values from 15A and 17 above. (This is referred to as Alternative D.)

20. Modify 19: Substitute 0.5xML for all data points set equal to the analytical ML. (This is referred to as Alternative E.)

Description of the Key Codes (See pages 29 & 30, 50-POTW Study) used to qualify analytical results in the 50-POTW Data Set.

CODE	CONCENTRATION	MEANING OF CODE
0	any	detected at this concentration
1	any	less than this concentration
2	any	detected at greater than (>) this concentration
3	any	detected, but not quantified at lower than this concentration
4	0	analytical interference prevented determination of the presence or prevented quantification of the analyte
4	any value >0	analytical interference was present, but concentration was estimated as this concentration
5	any	analytical interference was present, but the analyte was not detected above this concentration
6	0	no analysis was run or reported
7	0 or blank	reported as "not detected"
8	0	analyte was detected, but could not be quantified
8	any value >0	a pesticide was detected by GC-ECD at this concentration, but GC-MS did not confirm the presence of the analyte

8.0 POLLUTION PREVENTION PRACTICES AND WASTEWATER TREATMENT TECHNOLOGIES

This section presents an overview of pollution prevention practices and wastewater treatment technologies in the MP&M industry. Section 8.1 describes pollution prevention practices, Section 8.2 describes technologies used for the preliminary treatment of waste streams, and Section 8.3 describes end-of-pipe wastewater treatment and sludge dewatering technologies. This section discusses the most prevalent technologies in place at MP&M facilities, including all the technologies used as a basis for the MP&M effluent guidelines. However, additional technologies may be applicable for some MP&M facilities, depending on the waste streams generated. Additionally, not all technologies discussed in this section are applicable to all MP&M sites; the technology applicability is driven by the processes performed and waste streams generated on site.

8.1 Pollution Prevention Practices

Pollution prevention practices reduce the generation or discharge of pollutants and therefore potentially reduce treatment or disposal costs. Typical pollution prevention practices include reducing water use, extending the life of process bath constituents, or adding recycling or reuse technologies. This section divides pollution prevention practices into three categories. Section 8.1.1 discusses flow reduction practices, Section 8.1.2 discusses in-process pollution prevention technologies, and Section 8.1.3 describes additional methods of pollution prevention.

8.1.1 Flow Reduction Practices

Flow reduction practices are applied to process baths or rinses to reduce the amount of wastewater discharged. Flow reduction practices consist of optimizing rinse tank design and configuration and installing flow reduction technologies such as flow restrictors or timers. The following sections discuss flow reduction practices in greater detail.

8.1.1.1 Rinse Tank Design and Innovative Configurations

Rinsing follows many MP&M unit operations to remove dirt, oil, or chemicals (i.e., drag-out) remaining on parts or racks from a previous unit operation. Rinsing improves the quality of the surface finishing process and prevents the contamination of subsequent process baths. Rinse tank design and rinsing configuration are important factors influencing water usage. The key objectives of optimal rinse tank design are to quickly remove drag-out from the part and to disperse the drag-out throughout the rinse tank.

The MP&M industry uses various rinsing configurations. The use of single overflow rinse tanks following each process tank is the most inefficient use of rinse water. Multiple rinse tanks connected in series (i.e., cascade rinsing) reduce the water needs of a given rinsing operation by one or more orders of magnitude (i.e., less water is needed to achieve the same rinsing criterion). Spray rinsing can also be used to reduce water use requirements, but the

achievable percent reduction of water use is usually less than for countercurrent cascade rinses. A description of some of the common rinse types is provided below.

Cascade rinsing

Cascade rinsing is a method of reusing rinse water. Rinse water from one rinsing operation is plumbed to another, less critical rinsing operation before being discharged to treatment. Some rinse waters acquire chemical properties, such as low pH, that make them desirable for reuse in other rinse systems. For example, an acid treatment rinse may be plumbed to an alkaline treatment rinse, providing both drag-out removal and neutralization.

Countercurrent Cascade Rinsing

Countercurrent cascade rinsing refers to a series of consecutive rinse tanks which are plumbed to cause water to flow from one tank to another in the direction opposite of the work flow. Fresh water flows into the rinse tank located farthest from the process tank and overflows, in turn, to the rinse tanks closer to the process tank. This technique is termed countercurrent rinsing, because the work piece and the rinse water move in opposite directions. Over time, the first rinse becomes contaminated with drag-out and reaches a stable concentration which is lower than the process solution. The second rinse stabilizes at a lower concentration, which enables less rinse water to be used than if only one rinse tank were in place. Increasing the number of countercurrent cascade rinse tanks (three-stage, four-stage, etc.), reduces the amount of water needed to adequately remove the process solution. Figure 8-1 shows the application of countercurrent cascade rinsing.

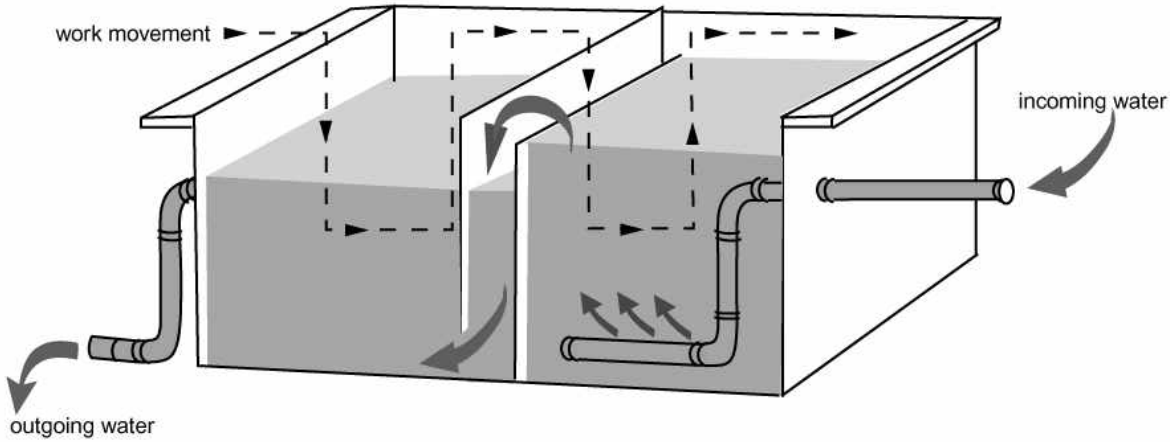

Figure 8-1. Countercurrent Cascade Rinsing

The rinse rate needed to adequately dilute drag-out depends on the concentration of process chemicals in the drag-out, the concentration of chemicals that can be tolerated in the final rinse tank before poor rinse results are obtained, and the number of countercurrent cascade rinse tanks. These factors are expressed in the following equation (2):

$$V_r = \left(\frac{C_o}{C_f}\right)^{1/n} \times V_D \qquad \textbf{(8-1)}$$

where:

V_r	=	the flow through each rinse stage, gal/min;
C_o	=	the concentration of the contaminant(s) in the initial process bath, mg/L;
C_f	=	the tolerable concentration of the contaminant(s) in the final rinse to give acceptable product cleanliness, mg/L;
n	=	the number of rinse stages used; and
V_D	=	the drag-out carried into each rinse stage, expressed as a flow, gal/min.

This mathematical rinsing model is based on complete rinsing (i.e., removal of all contaminants from the part/fixture) and complete mixing (i.e., homogeneous rinse water). Under these conditions, each additional rinse stage can reduce rinse water use by 90 percent. These conditions are not achieved unless there is sufficient residence time and agitation in each rinse tank. For less efficient rinse systems, each added rinse stage reduces rinse water use by 50 to 75 percent.

Countercurrent cascade rinsing systems have higher capital costs than overflow rinses and require more space to accommodate the additional rinse tanks. Also, when countercurrent cascade rinsing is used, the low flow rate through the rinse tanks may not provide the needed agitation for drag-out removal. In such cases, air or mechanical agitation may be added to increase rinsing efficiency.

Drag-out Rinsing

A drag-out rinse is a stagnant rinse, initially filled with fresh water, positioned immediately after the process tank. Parts are rinsed in drag-out tanks directly after exiting the process bath. The drag-out rinse collects the majority of the drag-out from the process tank, thus preventing it from entering the subsequent flowing rinses and therefore reducing pollutant loadings in those rinses. Gradually, the concentration of process chemicals in the drag-out tank rises. In the most efficient configuration, a drag-out tank follows a heated process tank that has a moderate to high evaporation rate. A portion of the fluid in the drag-out tank returns the process

tank to replace the evaporative loss. The level of fluid in the drag-out tank is maintained by adding fresh water. Electrolytic recovery of dissolved metals from drag-out tanks is also common.

Spray Rinsing

For certain part configurations, spray rinsing uses considerably less water than immersion rinsing. Spray rinsing can be performed in a countercurrent cascade configuration, further reducing water use. Spray rinsing can enhance draining over a process bath by diluting and lowering the viscosity of the process fluid film clinging to the parts.

8.1.1.2 Additional Rinse Design Elements

In addition to rinse configuration, other modifications can be made to the process line to reduce drag-out of process bath chemicals. For example, air knives and drip tanks reduce the pollutant loading and amount of rinsewater requiring treatment. Other aspects of good rinse tank design include positioning the water inlet and discharge points of the tank at opposite locations in the tank to avoid short-circuiting, using air agitation for better mixing, using a flow distributor, and using the minimum tank size possible (5). EPA describes several additional rinse design elements in more detail below.

Air Knives

Air knives are usually installed over a process tank or drip shield and are designed to remove drag-out by blowing it off the surface of parts and racks. Drag-out is routed back to the process tank. Air knives are most effective with flat parts and cannot be used to dry surfaces that passivate or stain due to oxidation.

Drip Shields

Drip shields are installed between process tanks and rinse tanks to recover process fluid dripping from racks and barrels that would otherwise fall into rinse tanks or onto the floor. Often, drip shields are an inclined piece of polypropylene or other material which is inert to the metal finishing process.

Drip Tanks

Drip tanks are similar to drag-out tanks except they are not filled with water. Parts exiting a process bath are held over the drip tank and the process fluid that drips from the parts is collected in the tank. When enough fluid is collected in the drip tank, the fluid is returned to the process tank.

Long Dwell Time

Automatic lines can be programmed to include optimum drip times. Long dwell times over the process tank reduce the volume of drag-out reaching the rinsing system. On manual lines, racks can be hung on bars over process baths to allow time to drip. Barrels can be rotated over the process bath to enhance drainage. Increases in drip time may be unsuitable for surfaces that can be oxidized or stained by exposure to air.

8.1.1.3 Rinse Water Use Control

Facilities can reduce water use by coordinating and closely monitoring rinse water requirements (e.g., rinse water use is optimized based on drag-out rates so that the rinse criterion is consistently achieved). Matching water use to rinse water requirements optimizes the quantity of rinse water used for a given work load and tank arrangement (5). Inadequate control of water-use negates the benefits of using multiple rinse tanks or employing other water conservation practices and results in a high water usage.

Many sites use some form of rinse water control. The four most common methods are flow restrictors (these can be used with other methods to regulate the rate at which water is dispensed), manual control (i.e., turning water valves on and off as needed), conductivity controls, and timer rinse controls. These are discussed below.

Flow Restrictors

A flow restrictor prevents the flow in a pipe from exceeding a predetermined flow rate. Flow restrictors are commonly installed on a rinse tank's water inlet. These devices contain an elastomer washer which flexes under pressure to maintain a constant water flow regardless of pressure. Flow restrictors can maintain a wide range of flow rates, from less than 0.1 gal/min to more than 10 gal/min. As a stand-alone device, a flow restrictor provides a constant water flow. As such, for intermittent rinsing operations, a flow restrictor does not coordinate the rinse flow with drag-out introduction. Precise control with intermittent operations typically requires a combination of flow restrictors and rinse timers. However, for continuous rinsing (e.g., continuous electroplating machines), flow restrictors may be adequate for good water use control.

Conductivity Meters

Conductivity probes measure the conductivity of water in a rinse tank to regulate the flow of fresh rinse water into the rinse system. Conductivity controllers consist of a controller, a meter with adjustable set points, a probe that is placed in the rinse tank, and a solenoid valve. As parts are rinsed, dissolved solids enter the water in the rinse tank, raising the conductivity of the water. When conductivity reaches a set point where the bath can no longer provide effective rinsing, the solenoid valve opens to allow make-up water to enter the tank. When the conductivity falls below the set point, the valve closes to discontinue the make-up water flow.

In theory, conductivity control of rinse flow is a precise method of maintaining optimum rinsing conditions in intermittently used rinse operations. In practice, conductivity controllers work best with deionized rinse water. Incoming water conductivity may vary day-to-day and season-to-season, which forces frequent set point adjustments. In addition, suspended solids and nonionic contaminants (e.g., oil) can cause inadequate rinsing and are not detected by the conductivity probe.

Rinse Timers

Rinse timers are electronic devices that control a solenoid valve. The timer usually consists of a button that, when pressed, opens the valve for a predetermined length of time, usually from 1 to 99 minutes. After the time period has expired, the valve is automatically closed. The timer may be activated either manually by the operator or automatically by the action of racks or hoists. Automatic rinse timers are generally preferred for intermittent rinses since they eliminate operator error. Rinse timers installed in conjunction with flow restrictors can provide precise control when the incoming water pressure may rise and fall. Rinse timers are less effective in continuous or nearly continuous rinse operations (e.g., continuous electroplating machines).

8.1.1.4 Pollution Prevention for Process Baths

Facilities can also implement pollution prevention technologies for process baths to reduce the pollutant loadings and therefore the amount of rinse water required. EPA gives several examples of pollution prevention technologies for process baths below.

Temperature

Temperature and viscosity are inversely related; therefore, operating at the highest possible bath temperature will lower viscosity and reduce drag-out.

Lower Concentration

Operating at the lowest possible concentration reduces the mass of chemicals in a given volume of drag-out. Also, viscosity and concentration are directly related; therefore, lower process bath concentration will result in lower viscosity and less drag-out volume. Contaminants and other process bath impurities should be minimized, if possible.

Wetting Agents

Wetting agents or surfactants may be added to some process baths to reduce viscosity and surface tension, thereby significantly reducing drag-out.

8.1.2 In-Process Pollution Prevention Technologies

This section describes in-process pollution prevention technologies used in the MP&M industry. Not all technologies discussed in this section are applicable to all MP&M sites. The pollution prevention practices that are included in the MP&M technology options are listed in Section 9.0.

In-process pollution prevention technologies can be applied to process baths or rinses. Process baths become contaminated with impurities that affect their performance. The sources of process bath contamination include: (1) breakdown of process chemicals; (2) buildup of byproducts (e.g., carbonates); (3) contamination from impurities in make-up water, chemicals, or anodes; (4) corrosion of parts, racks, tanks, heating coils, etc.; (5) drag-in of chemicals; (6) errors in bath additions; and (7) airborne particles entering the tank. If not properly maintained, process baths eventually become unusable and require disposal. Regeneration and maintenance techniques help keep baths in good operating condition, thereby extending the useful lives of process solutions. Use of these technologies reduces the pollutant loading to the wastewater treatment system, which in turn reduces wastewater treatment chemical purchases and sludge disposal costs.

This section describes the following technologies:

- Activated carbon adsorption;
- Carbonate freezing;
- Centrifugation and pasteurization of machining coolants;
- Centrifugation and recycling of painting water curtains;
- Electrodialysis;
- Electrolytic recovery;
- Evaporation;
- Filtration;
- Ion exchange; and
- Reverse osmosis.

8.1.2.1 Activated Carbon Adsorption

Activated carbon adsorption of electroplating baths is a common method of removing organic contaminants. Process solution flows through a filter where the carbon adsorbs organic impurities that result from the presence of oils or cleaners from the breakdown of bath constituents. Carbon adsorption can be used on either a continuous or batch basis, depending on the site’s preference. Carbon treatment is most commonly applied to nickel, copper, zinc, and cadmium electroplating but can also be used to recycle paint curtain wastewater.

8.1.2.2 Carbonate "Freezing"

Carbonate "freezing" removes excessive carbonate buildup by forming carbonate salt crystals at a low temperature. This process is most often applied to electroplating baths formulated with sodium cyanide. Carbonates build up in the process bath by the breakdown of cyanide (especially at high temperatures) and the adsorption of carbon dioxide from the air. An excessive carbonate concentration reduces the quality of many metal finishing operations. Carbonate "freezing" takes advantage of the low solubility of carbonate salts in the sodium cyanide bath. The method lowers the bath temperature to approximately 26°F (-3°C), at which point hydrated salt ($Na_2CO_3 \cdot 10H_2O$) crystallizes out of solution. The crystallized carbonate can be removed by decanting the fluid into another tank or by filtration.

8.1.2.3 Centrifugation and Pasteurization of Machining Coolants

Most machining coolants consist of water-soluble oil in water. The water-soluble coolant is typically pumped through a sump, over the machining tool and part during machining, and back to the sump. Over a period of time, coolant becomes ineffective, or spent, for one or more of the following reasons:

- The concentration of suspended solids in the coolant begins to inhibit performance;
- Nonemulsified, or "tramp", oil collects on the surface of the coolant;
- The coolant becomes rancid due to microbial growth; or
- Coolant additives are consumed by drag out and organic breakdown, thus reducing corrosion prevention and lubrication properties.

Machining coolant can be recycled using a centrifugal separator and pasteurization unit. Centrifugation removes the solids from the coolant to extend its usable life. The separator is a rotating chamber that uses centrifugal force to push the coolant through a mesh chamber, leaving behind the contaminants. Sludge is scraped from the centrifuge and collected in a sludge hopper. Some high speed centrifuges can also perform liquid - liquid separation for the removal of tramp oils. The coolant is pasteurized after separation to kill the microorganisms that cause bacterial growth. Bacterial growth can also be controlled by addition of a biocide. Figure 8-2 shows a diagram of a typical machine coolant recycling system.

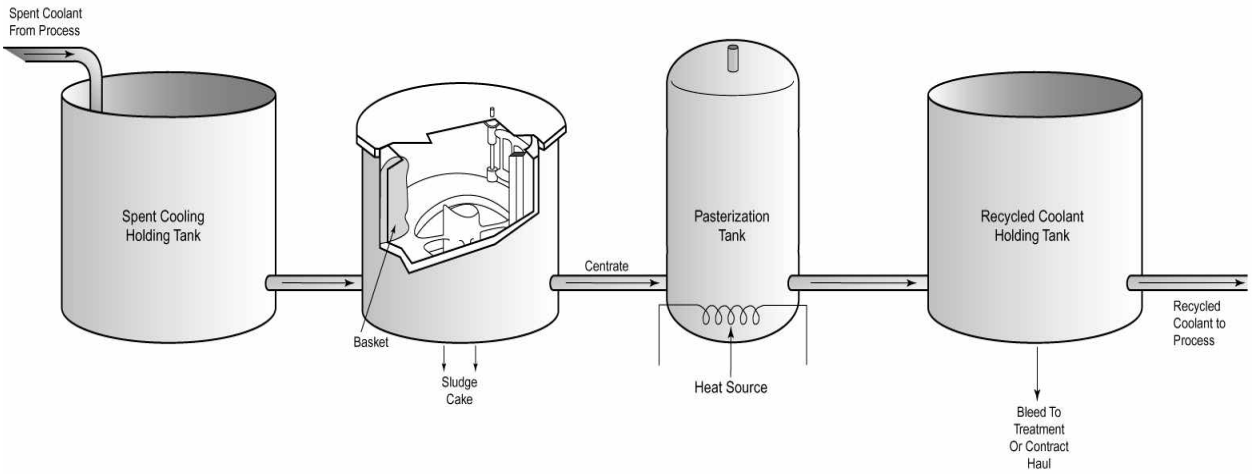

Figure 8-2. Machine Coolant Recyclying System

Centrifugal separators are very reliable and require only routine maintenance, such as periodic cleaning and removal of accumulated solids. Flow rate is the primary operating factor to control. The sludge generated from this technology is commonly classified as a hazardous waste, based on the metal type processed and the amount of metal that dissolves into the coolant. The sludge is typically contract hauled for treatment and disposal.

Coolant recycling is most effective when sites minimize the number of different coolants used on site and use a centralized coolant recycling system. However, some sites may not be able to use a single recycling system because of multiple coolant types required by product or customer specifications. In this case, sites may need to purchase dedicated coolant recycling systems for each type of coolant used.

Centrifugation and pasteurization can be used along with oil skimming and biocide addition to reduce coolant discharge and pollutant generation at the source. Oil skimming using a vertical belt system removes large amounts of tramp hydraulic oils floating on the surface of the machine coolant. Oil skimming and biocide addition can further extend the life of water-soluble coolant, thereby reducing the amount of coolant and wastewater requiring treatment and disposal, and minimizing the amount of fresh coolant purchased.

8.1.2.4 Centrifugation and Recycling of Painting Water Curtains

Water curtains are a continuous flow of water behind the part being spray painted in a paint booth. The water traps paint overspray and is continuously recirculated in the paint curtain until the solids content in the wastewater necessitates either in-process treatment and recycling or discharge. Centrifugal separators remove the solids and recycle the water curtain, eliminating the need for discharge. In this system, wastewater is pumped to a holding tank, then through the centrifugal separator, which separates the solids from the wastewater (see section

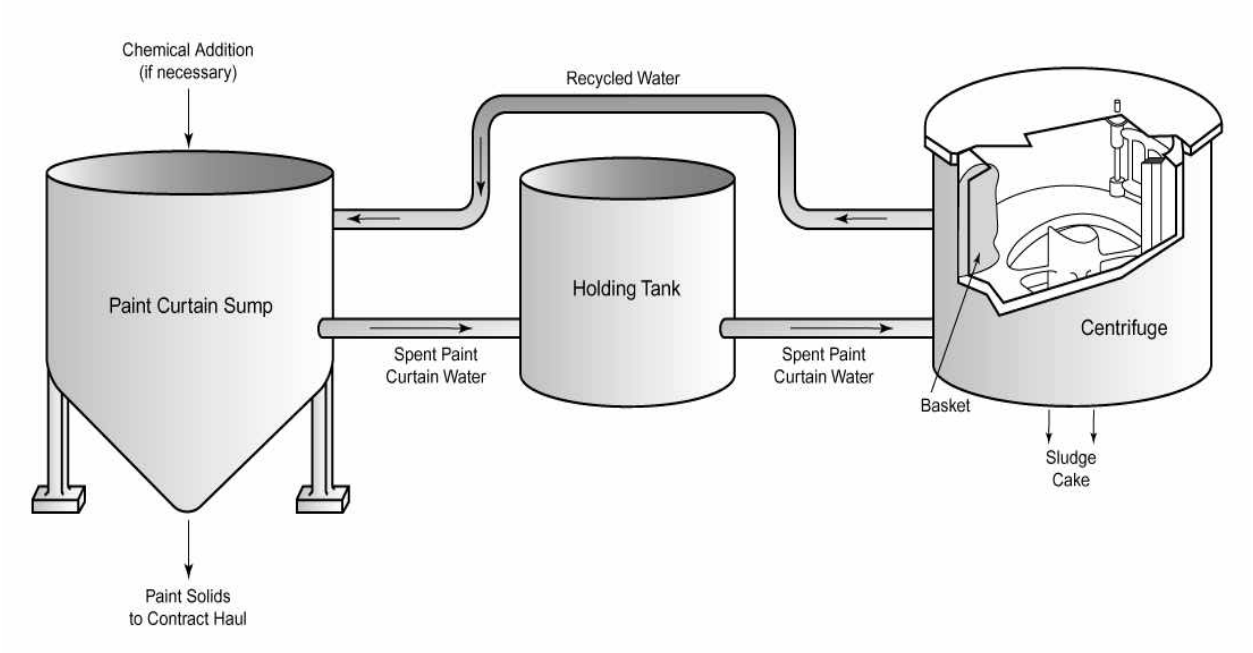

Figure 8-3. Centrifugation and Recycling of Painting Water Curtains

8.1.2.3). Solids are contract hauled for off-site disposal, while the treated wastewater is returned to the paint booth. Detactifiers may be added before centrifugation to increase the solid separation efficiency.

Centrifugation of the paint curtain proceeds until all wastewater is treated and only sludge remains in the sump. The sludge in the water curtain sump must be removed either manually, with a sludge pump, or by a vacuum truck. After the sludge has been removed and the wastewater has been treated through the centrifuge, the wastewater from the holding tank is pumped back into the water curtain sump. Make-up water is added to compensate for evaporation. Using this procedure, the paint curtain water can be continuously recycled. Figure 8-3 shows a flow diagram of a typical paint curtain centrifugation and recycling system.

Wastewater from painting water curtains commonly contains organic pollutants as well as certain metals. Eliminating the discharge of wastewater from painting water curtains may eliminate the need for an end-of-pipe treatment step for organic pollutants at certain sites. Also, if a site generates only painting wastewater and continuously recycles the wastewater, the site would not need end-of-pipe wastewater treatment.

As discussed in Section 8.1.2.3, centrifugal separators are very reliable and require only routine maintenance. Flow rate is the primary operating factor to control. One disadvantage of this technology is that it may not be economically feasible for sites generating only a small amount of paint curtain wastewater. Sites that have multiple sumps can use portable centrifuges.

The sludge generated from painting water curtains is commonly classified as a hazardous waste, based on the type of paint used, and is typically contract hauled for treatment and disposal.

8.1.2.5 Electrodialysis

Electrodialysis is a membrane technology used to remove impurities from process solutions. A direct current is applied across a series of alternating anion and cation exchange membranes to remove dissolved metal salts and other ionic constituents from solutions.

An electrodialysis unit consists of a rectifier and a membrane stack. The rectifier converts alternating current to direct current. The stack consists of alternating anion- and cation-specific membranes which form compartments. As the feed stream enters the unit, ions move across the electrodialysis membranes, forming a concentrated stream and a deionized stream. When the compartments are filled, a direct current is applied across each membrane in the stack. Cations traverse one cation-specific membrane in the direction of the cathode and are trapped in that concentrate compartment by the next membrane, which is anion-specific. Anions from the neighboring compartment traverse the anion-specific membrane in the direction of the anode, joining the cations, and are likewise trapped in the concentrate compartment by the next cation-specific membrane. In this way, the feed stream is depleted of ions, and anions and cations are trapped in each concentrate compartment. Electrodialysis is typically used to remove metal ions from electroplating wastewater. Figure 8-4 shows a diagram of an electrodialysis cell.

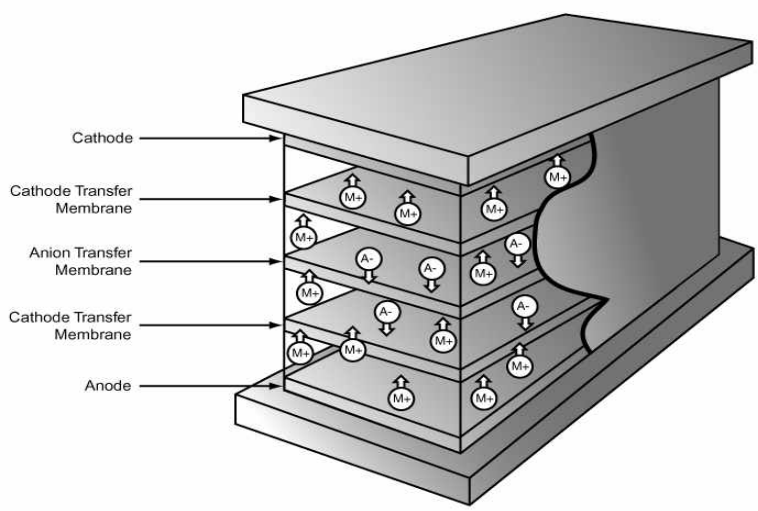

Figure 8-4. Electrodialysis Cell

8.1.2.6 Electrolytic Recovery

Electrolytic recovery is an electrochemical process used to recover metals from many types of process solutions and rinses, such as electroplating rinse waters and baths.

Electrolytic recovery removes metal ions from a waste stream by processing the stream in an electrolytic cell, which consists of a closely spaced anode and cathode. Commercial equipment consists of one or more cells, a transfer pump, and a rectifier. Current is applied across the cell and metal cations are deposited on the cathodes. The waste stream is usually recirculated through the cell from a separate tank, such as a drag-out recovery rinse.

Electrolytic recovery is typically applied to solutions containing either nickel, copper, precious metals, or cadmium. Chromium cannot be electrolytically recovered because it exists primarily in anionic forms such as dichromate. Aluminum is also a poor candidate for electrolytic recovery. Drag-out recovery rinses and ion-exchange regenerant are solutions that are commonly processed using electrolytic recovery. Some solutions require pH adjustment prior to electrolytic recovery. Acidic, metal-rich, cation regenerant is an excellent candidate stream for electrolytic recovery and is often electrolytically recovered without pH adjustment. In some cases, when the target metal concentration is reached, the waste stream may be reused as cation regenerant.

The capacity of electrolytic recovery equipment depends on the total cathode area and the maximum rated output of the rectifier. Commercial units are available with a cathode area ranging from 1 ft^2 to 100 ft^2 or larger, and an output of 10 to 1,000 amperes or more. Theoretical electrolytic recovery rates are determined by Faraday's law which states the amount of chemical change produced by an electric current is proportional to the quantity of electricity used. Theoretical recovery rates range from 1.09 grams/amp-hour for nickel to 7.35 grams/amp-hour for monovalent gold. Actual rates are usually much lower and depend on the metal concentration in the waste stream. At concentrations under 100 mg/L, electrolytic recovery rates may be below 10 percent of the theoretical maximum.

Various types of cathodes are used in electrolytic recovery units, depending mainly on the concentration of metal in the waste stream. Cathodes are often classified by their surface area. Flat-plate cathodes have the lowest surface area and are used only for recovering metal from metal-rich waste streams (usually 1,000 to 20,000 mg/L of metal). Reticulate cathodes, which have a metallized woven fiber design, have a surface area ten times greater than their apparent area. These cathodes are effective over a wide range of metal concentrations but are typically used where the dissolved metal concentration is below 100 mg/L. Carbon and graphite cathodes have the highest surface area per unit of apparent area. Their use is usually restricted to metal concentrations below 1,000 mg/L.

Dissolved metals in electrolytes can be recovered to low levels (<5 mg/L) using reticulate or carbon cathodes. In practice, however, the target concentration for most applications is 50 to 250 mg/L or higher because of the time and energy required to achieve concentrations less than 100 mg/L. With flat-plate cathodes, the target concentration is usually above 500 mg/L, because plating efficiency drops as concentration falls. Plating time required to lower the concentration of a pollutant from 100 to 10 mg/L can be several times longer than that required to lower the concentration from 10,000 mg/L to 100 mg/L. Also, unit energy costs (measured in dollars per pound of metal recovered) increase substantially at lower metal concentrations.

Labor requirements are relatively low for electrolytic recovery. Units recovering metal from drag-out recovery tanks may only require occasional cleaning and maintenance. Units treating batch discharges from ion-exchange units require more labor due to the higher metal content of the solution and the resultant increase in cathode loading frequency. Energy costs for this technology can be high, and, in some cases, exceed the recovery value of the metal. Energy requirements depend on several factors, including required voltage, rectifier efficiency, and current efficiency. In addition, from an energy standpoint, electrolytic recovery removes metals from concentrated solutions more efficiently than from dilute solutions. Electrode replacement costs may be significant for units using disposable cathodes, especially for high metal recovery rates. However, if electrodes are constructed properly, cathodes and anodes may last more than five years for most applications.

Numerous vendors offer electrolytic recovery technology. The technology is applicable to a wide range of processes, drag-out rinses, and ion-exchange regenerants due to the diversity of materials and configurations available for anodes and cathodes. Electrolytic recovery is not applicable to flowing rinses due to the lower metal concentrations and the extended time required for metal recovery. In most cases, this technology cannot cost-effectively remove dissolved metals to concentrations required for discharge to POTWs or surface waters.

8.1.2.7 Evaporation

Evaporation is a common chemical recovery technology. There are two basic types of evaporators: atmospheric and vacuum. Atmospheric evaporators are more prevalent and are relatively inexpensive to purchase and easy to operate. Vacuum evaporators are mechanically more sophisticated and are more energy-efficient. Vacuum evaporators are typically used when evaporation rates greater than 50 to 70 gallons per hour are required. There are two typical methods of in-process evaporation and reuse: 1) evaporate the water and then condense the water for reuse in baths and rinses, and 2) evaporate the water and reuse the concentrate (i.e., the process solution that remains after water is evaporated) in process baths. Reusing the condensate is more common.

8.1.2.8 Filtration

Filtration removes suspended solids from surface finishing solutions. Suspended solids in surface finishing solutions may cause roughness and burning of deposits. Filtration uses various types of equipment, the most common of which are cartridge filters, precoat diatomaceous earth filters, sand, and multimedia filters. Cartridge filters are available with either in-tank or external configurations. The in-tank units are used mostly for small tanks and the external units for larger tanks. Most cartridges are disposable; however, washable and reusable filters are available, which further reduce waste generation. Precoat, sand, and multimedia filters are used mostly for large tanks. The filter media used depends on the chemical composition of the bath. All filtration systems are sized based on solids loading and the required flow rate.

Membrane filtration can also be used to remove oils and metals from process baths or rinses. Membrane filters can be used to recycle paint curtain or machine coolant wastewater and are typically used to recover and recycle electrophoretic painting ("e-coat") solutions. Membrane filtration is a pressure-driven process used to separate solution components based on molecular size and shape. Solvent and small solutes can pass through the membrane while the membrane retains and collects larger compounds as a concentrated waste stream. The cleaner permeate can be reused in the process. Figure 8-5 shows a typical membrane filtration unit.

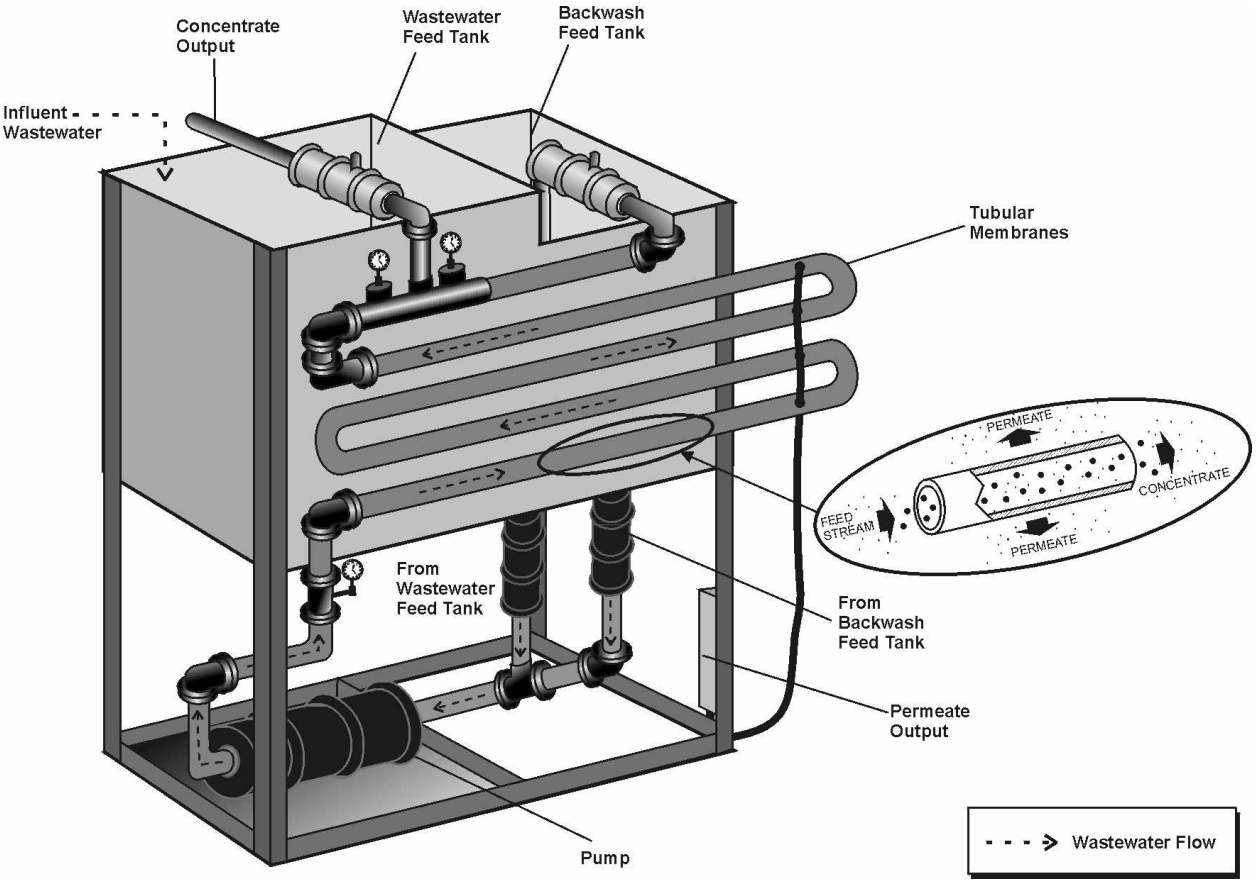

Figure 8-5. Membrane Filtration Unit

8.1.2.9 Ion Exchange (in-process)

Ion exchange is a commonly used technology within the MP&M industry. In addition to water recycling and chemical recovery applications, ion exchange is used to soften or deionize raw water for process solutions. Figure 8-6 shows a typical ion exchange system.

Ion exchange is a reversible chemical reaction that exchanges ions in a feed stream for ions of like charge on the surface of an ion-exchange resin. Resins are broadly divided into cationic or anionic types. Typical cation resins exchange H^+ for other cations, while anion resins exchange OH^- for other anions.

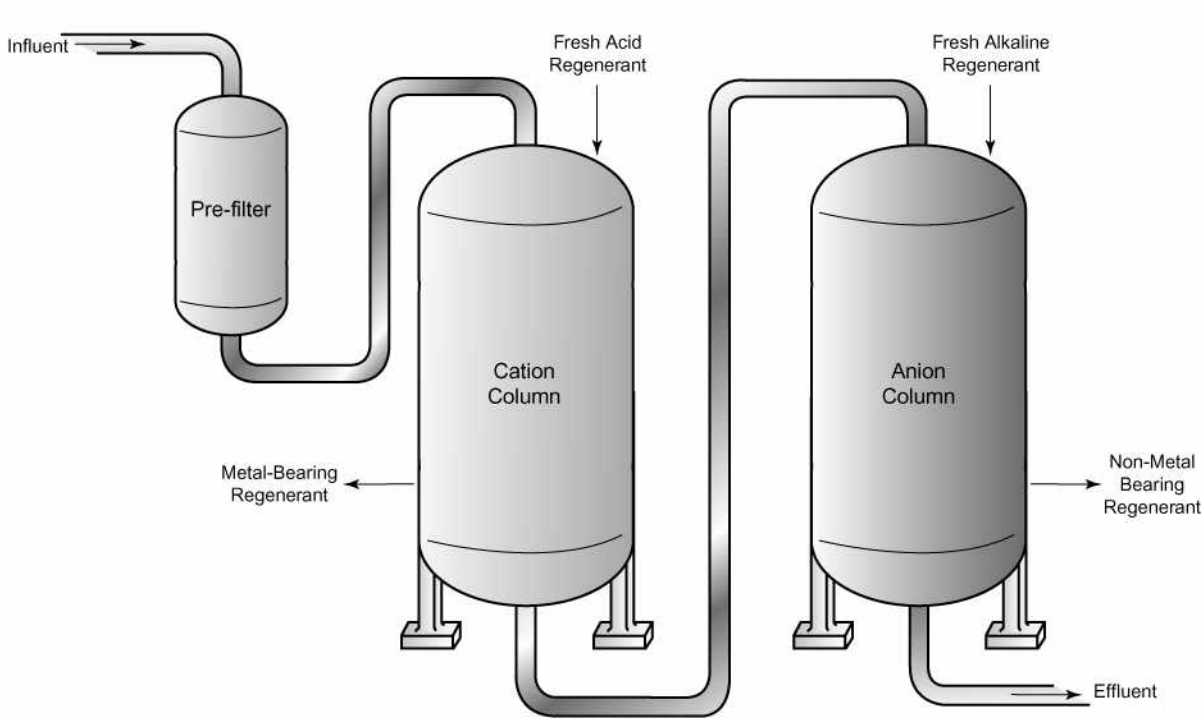

Figure 8-6. Ion Exchange

In practice, a feed stream passes through a column, which holds the resin. The feed stream is usually either dilute rinse water (in-process ion exchange) or treated wastewater (end-of-pipe ion exchange). Often, prior to ion-exchange treatment, the feed stream passes through a cartridge filter and a carbon filter to remove suspended solids and organics that foul the resin bed. The exchange process continues until the capacity of the resin is reached (i.e., an exchange has occurred at all the resin sites). A regenerant solution is then passed through the column. For cation resins, the regenerant is an acid, and the H^+ ions replace the cations captured from the feed stream. For anion resins, the regenerant is a base, and OH^- ions replace the anions captured from the feed stream. The metals concentration is much higher in the regenerant than in the feed stream; therefore, the ion-exchange process not only separates the metals from the wastestream but also results in a more concentrated wastestream.

Ion exchange is used for water recycling and/or metal recovery. For water recycling, cation and anion columns are placed in series. The feed stream is deionized and the product water is reused for rinsing. Often, closed-loop rinsing is achieved. The regenerant from the cation column contains metal ions, which can be recovered in elemental form via electrolytic recovery (see Section 8.1.2.6). The anion regenerant is typically discharged to wastewater treatment. This type of ion exchange is used to recycle relatively dilute rinse streams. Generally, the total dissolved solids (TDS) concentration of such streams must be below 500 mg/L to maintain an efficient regeneration frequency. Reducing drag-out can enhance the efficiency of the recovery process. Effluent TDS concentrations of 2 mg/L or less are typical.

When metal recovery is the only objective, a single or double cation column unit containing selective resin is used. These resins attract divalent cations while allowing monovalent cations to pass, a process usually called metal scavenging. This technology is efficient if the metal ions being scavenged are the primary source of ions in the stream. Ion exchange provides effective metals recovery even when the metal content of the stream is only a small fraction of the TDS present in the stream, making scavenging suitable over a wider range of TDS than water recycling. Scavenging also provides a highly concentrated regenerant, particularly suitable for electrolytic recovery (see Section 8.1.2.6). Water recycling using this ion exchange configuration is not possible since only some of the cations and none of the anions are removed. Standard units typically achieve effluent metal concentrations of under 0.5 mg/L.

Many process wastewaters are excellent candidates for ion exchange, including the rinse water from plating processes of chromium, copper, cadmium, gold, lead, nickel, tin, tin-lead, and zinc. Ion exchange resins are usually regenerated using inexpensive chemicals such as sulfuric acid and sodium hydroxide. Gold-bearing resins are difficult to regenerate and frequently require incineration to recover the gold content. Lead is also difficult to recover from ion exchange resins. Methane sulfonic acid and fluoboric acid (usually not suitable for electrolytic recovery) are effective regenerants for lead ion exchange but are very expensive. Cyanide rinse waters are amenable to ion exchange; cation resins are capable of breaking the metal-cyanide complex and the cyanide is removed in the anion column. The metals in the cation regenerant can be electrolytically recovered and the cyanide present in the anion regenerant can be returned to the process or discharged to treatment.

Ion-exchange equipment ranges from small, manual, single-column units to multi-column, highly automated units. Two sets of columns are necessary for continuous treatment; one set receives the wastewater flow while the other set is being regenerated. Thus, two-column metal scavenging and four-column deionizing systems are common. Automatic systems direct the wastewater flow and initiate regeneration with little or no operator involvement.

The labor requirements for ion exchange depend on the automation level of the equipment. Manual systems can have significant labor costs associated with preparing, transporting, and disposing of regenerants. Automatic systems require far less labor. Resins need to be replaced periodically due to organic contamination, resin oxidation, and fouling from suspended solids. This process can be hastened by misuse, accidents, or poor engineering.

Equipment size is based on flow rate and concentration. Resin capacity varies but often ranges from 1 to 2 lbs/ft^3. Flow rates may range from 1 to 20 or more gpm. Columns are typically sized to handle wastewater flow for at least a period of time equal to that required for regeneration. Automatic systems are sized to provide continuous treatment. Regeneration volume typically ranges from 2 to 4 resin bed volumes of dilute acid or caustic. Concentrations of feed stream contaminants generally range from 10 to 20 g/L.

8.1.2.10 Reverse Osmosis

Reverse osmosis is a membrane separation technology used by the MP&M industry for chemical recovery. Dilute rinse water is pumped to the surface of the reverse osmosis membrane at pressures of 400 to 1,000 pounds per square inch gauge (psig). The membrane separates the feed stream into a reject stream and a permeate. The reject stream, containing most of the dissolved solids in the feed stream, is deflected from the membrane while the permeate passes through. Reverse osmosis membranes reject more than 99 percent of multivalent ions and 90 to 96 percent of monovalent ions, in addition to organics and nonionic dissolved solids. The permeate stream is usually of sufficient quality to be recycled as rinse water, despite the small percentage of monovalent ions (commonly potassium, sodium and chloride) that pass through the membrane. Reverse osmosis equipment is similar to the equipment shown in Figure 8-5.

A sufficiently concentrated reject stream can be returned directly to the process bath. The reject stream concentration can be increased if the stream is recycled through the unit more than once or by increasing the feed pressure. In multiple-stage units containing more than one membrane chamber, the reject stream from the first chamber is routed to the second, and so on. The combined reject streams from multistage units may, in some cases, have high enough concentrations to be returned directly to the bath.

The capacity of reverse osmosis equipment is generally measured in flow volume, and is determined by the membrane surface area and operating pressure. Generally, increasing the surface area of the membrane increases the capacity. Operating at higher pressures increases

the permeate flow volume per unit membrane area (also called the flux). Reject stream concentration increases with pressure and decreases as flow volume increases.

Facilities may need to prefilter and pretreat the feed stream to lengthen membrane life or reduce the frequency of fouling; filtration to remove suspended solids is usually necessary. Adjusting pH may prevent precipitation as the feed stream is concentrated, but it may make the concentrate unfit to return to the process bath.

Reverse osmosis is most applicable to electroplating rinse waters, including electroplating of Watts nickel, bright nickel, brass cyanide, copper cyanide, and zinc cyanide. This technology can treat TDS concentrations of up to 1,000 mg/L. Permeate TDS concentrations of 250 mg/L or less are typical, and the dissolved solids are mostly common monovalent ions, allowing the permeate stream to be reused in many rinsing operations.

The maximum achievable reject stream concentration for basic reverse osmosis equipment is approximately 20,000 mg/L TDS. Multipass and multistage units achieve concentrations of 30,000 mg/L TDS or higher. If the reject stream is acceptable to return directly to the process bath and the permeate is recycled as rinse water, a closed loop is created. However, returning the reject stream directly to the bath is uncommon because the concentration is often too low. In cases where the reject stream concentration is not high enough to return it to the bath, it can be concentrated with an evaporator, electrolytically recovered, or treated conventionally (e.g., with chemical precipitation). When evaporators are used, however, reverse osmosis loses its low-energy advantage over other in-process reuse and recovery technologies.

When both technologies include an electrolytic recovery unit, reverse osmosis often has a higher capital cost than ion exchange. As end-of-pipe treatment, reverse osmosis and ion exchange both remove similar quantities of metals; however, reverse osmosis may allow for more water recycling. During reverse osmosis, energy is consumed only by pumps. In most cases, water is recycled; in some cases, a closed loop is possible. Compared to ion exchange, reverse osmosis can treat somewhat higher feed stream concentrations. The concentration of reverse osmosis reject streams are near or higher than that of ion-exchange regenerants. Both are less effective in handling oxidizing chemistries or feed streams high in organics and total suspended solids (TSS). Ion-exchange effluent generally has a lower TDS concentration than reverse osmosis permeate and can be recycled in most rinses.

For most applications, reverse osmosis membranes last for one to five years, although they are susceptible to fouling from organics, suspended solids, or misuse. Reverse osmosis units may have instrumentation that indicates the condition of the membrane by measuring the flux. If the membrane fouls or clogs, the flux rate drops, indicating that the membrane should be cleaned. Labor associated with operating reverse osmosis equipment is for periodic membrane cleaning. Membrane and pump replacement are the primary maintenance items.

8.1.3 Other Types of Pollution Prevention Practices

Many other types of pollution prevention practices are performed at MP&M facilities including the following: training and supervision; production planning; process or equipment modification; raw material and product substitution or elimination; loss prevention and housekeeping; waste segregation and separation; and closed-loop recycling. EPA describes each of these practices below. Some of these practices may be elements of an Environmental Management System (EMS).

Training and Supervision. Training and supervision ensure that employees are aware of, understand, and support the company's pollution prevention goals. Effective training programs translate these goals into practical information that enables employees to minimize waste generation by properly and efficiently using tools, supplies, equipment, and materials.

Production Planning. Production planning can minimize the number of process operation steps and eliminate unnecessary procedures (e.g., planning production can eliminate additional cleaning steps between process operations).

Process or Equipment Modification. Sites can modify processes and equipment to minimize the amount of waste generated (e.g., changing rack configuration to reduce drag-out).

Raw Material and Product Substitution or Elimination. Where possible, sites should replace toxic or hazardous raw materials or products with other materials that produce less waste and/or less toxic waste (e.g., replacing chromium-bearing solutions with nonchromium-bearing and less toxic solutions, or consolidating types of cleaning solutions and machining coolants).

Loss Prevention and Housekeeping. Loss prevention and housekeeping includes performing preventive maintenance and managing equipment and materials to minimize leaks, spills, evaporative losses, and other releases (e.g., inspecting the integrity of tanks on a regular basis; using chemical analyses instead of elapsed time or number of parts processed as the basis for disposal of a solution).

Waste Segregation and Separation. Sites should avoid mixing different types of wastes or mixing hazardous wastes with nonhazardous wastes. Similarly, sites should not mix recyclable materials with noncompatible materials or wastes. For example, MP&M facilities can segregate scrap metal by metal type, separate cyanide-bearing wastewater for preliminary treatment, and segregate coolants for recycling or treatment.

Closed-Loop Recycling. MP&M sites can recover and reuse some process streams. For example, some sites can use ion exchange to recover metal from electroplating rinse water, the rinsewater can be reused, and the regenerant solution can be used as solution make-up.

8.2 Preliminary Treatment of Segregated Wastewater Streams

Preliminary treatment systems reduce pollutant loadings in segregated waste streams prior to end-of-pipe treatment. Wastewater containing pollutants such as cyanide, hexavalent chromium, oil and grease, or chelated metals inhibit the performance of end-of-pipe treatment systems and require preliminary treatment. Proper segregation and treatment of these streams is critical for the successful treatment of MP&M wastewater. Highly concentrated metal-bearing wastewater may also be treated to reduce metal concentrations before end-of-pipe treatment. This section describes the following wastewater streams that typically undergo preliminary treatment at MP&M facilities:

- Chromium-bearing wastewater;
- Concentrated metal-bearing wastewater;
- Cyanide-bearing wastewater;
- Chelated metal-bearing wastewater; and
- Oil-bearing wastewater.

8.2.1 Chromium-Bearing Wastewater

MP&M facilities generate hexavalent-chromium-bearing wastewater from acid treatment, anodizing, conversion coating, and electroplating operations and rinses. Hexavalent chromium exists in an ionic form and does not form a metal hydroxide; therefore, this wastewater is not treated directly by chemical precipitation and sedimentation. The wastewater requires preliminary chemical treatment to reduce the hexavalent chromium to trivalent chromium. The trivalent chromium can then be removed by chemical precipitation and sedimentation. The chemical reduction process is discussed below. Figure 8-7 presents a process flow diagram of a continuous chromium reduction system.

Reduction is a chemical reaction in which electrons are transferred from one chemical (the reducing agent) to the chemical being reduced. Sulfur dioxide, sodium bisulfite, sodium metabisulfite, and ferrous sulfate form strong reducing agents in water. MP&M facilities use these reducing agents to reduce hexavalent chromium to the trivalent form, which allows the metal to be removed from solution by subsequent chemical precipitation.

Sodium metabisulfite, sodium bisulfite, and sulfur dioxide are the most widely used reducing agents at MP&M sites. Below is an equation showing the sulfur dioxide reaction (reduction using other reagents is chemically similar):

$$2H_2CrO_4 + 3SO_2 \rightarrow Cr_2(SO_4)_3 + 2H_2O \qquad \textbf{(8-2)}$$

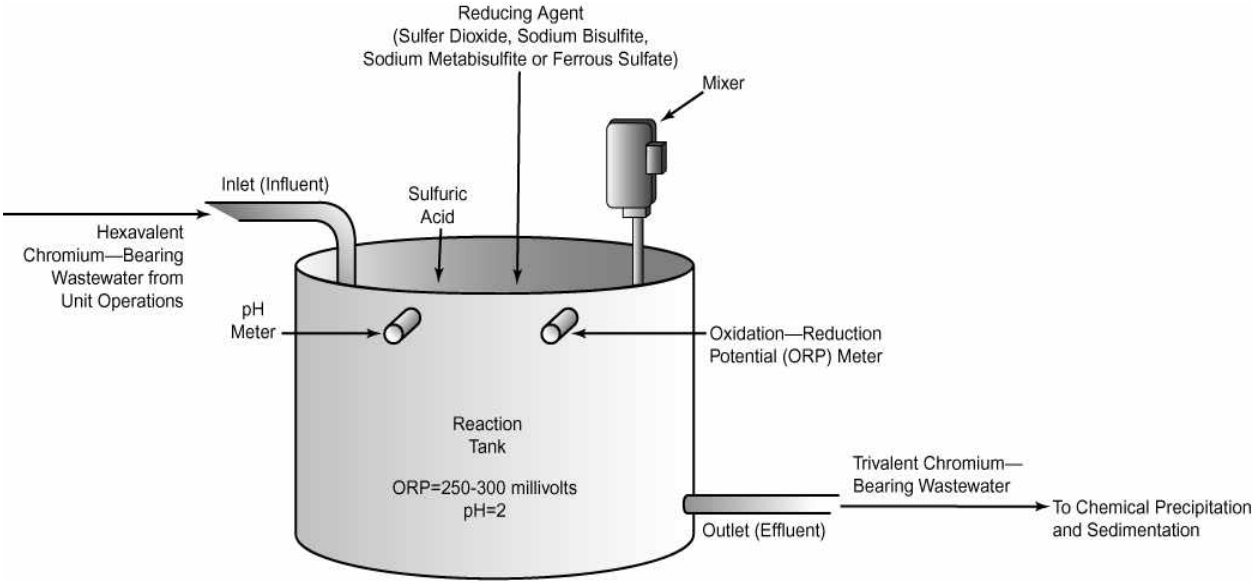

Figure 8-7. Chemical Reduction of Hexavalent Chromium

An operating pH of between 2 and 3 is normal for chromium reduction. At pH levels above 5, the reduction rate is slow, and oxidizing agents such as dissolved oxygen and ferric iron interfere with the reduction process by consuming the reducing agent.

Typically, the chemicals are retained in a reaction tank for 45 minutes. The tank is equipped with pH and oxidation-reduction potential (ORP) controls. Sulfuric acid is added to maintain a pH of approximately 2, and a reducing agent is metered to the reaction tank to maintain the ORP at 250 to 300 millivolts.

Chemical reduction of hexavalent chromium is a proven technology that is widely used at MP&M sites. Operation at ambient conditions requires little energy, and the process is well suited to automatic control. For high concentrations of chromium, treatment chemical costs may be significant.

Maintenance of chemical reduction systems consists of sludge removal, the frequency of which depends on the concentration of contaminants. There may also be small amounts of sludge generated due to minor shifts in the solubility of the contaminants (e.g., iron hydroxides). This sludge can be removed by the sludge-handling equipment associated with the chemical precipitation system.

8.2.2 Concentrated Metal-Bearing Wastewater

Concentrated metal-bearing wastewater from spent process solutions can be slowly metered to the end-of-pipe chemical precipitation system and commingled with other facility wastewater or batch treated. Some facilities send concentrated metal-bearing wastewater for off-site treatment rather than treating the wastewater on site. Batch treatment of concentrated metal-bearing wastewater provides better control of the treatment system (e.g., the treatment chemicals can be better tailored to the specific solution being treated), better treatment of difficult-to-treat materials (e.g., photo resist-bearing wastewater), and potential recovery of metals from the sludge. With batch treatment, effluent from the batch treatment tank is typically discharged to the end-of-pipe treatment system for additional polishing.

Batch chemical precipitation of concentrated metal-bearing wastewater typically occurs in a single stirred tank, where a precipitating agent (e.g., sodium hydroxide, lime, sodium sulfide) is added to create an insoluble metal hydroxide or sulfide complex. Following precipitate formation, a polyelectrolyte is added to flocculate the metal hydroxide or metal sulfide particles into larger clumps that will settle to the bottom of the reaction tank following mixing. Clarified effluent from the batch tank is discharged to the end-of-pipe treatment system and the settled sludge, typically containing only one type of metal, is transferred offsite for metals recovery.

8.2.3 Cyanide-Bearing Wastewater

Plating and cleaning wastewater may contain significant amounts of cyanide, which should be destroyed through preliminary treatment. In addition to its toxicity, cyanide forms complexes with metals that prohibit subsequent removal in chemical precipitation systems. Cyanide is typically destroyed using alkaline chlorination with sodium hypochlorite or chlorine gas or by ozone oxidation. EPA describes these two processes below.

8.2.3.1 Alkaline Chlorination

Cyanide destruction through alkaline chlorination is widely used in industrial wastewater treatment. Chlorine is typically used as either chlorine gas or sodium hypochlorite (i.e., bleach). This process is shown by the following two-step chemical reaction:

$$Cl_2 + NaCN + 2NaOH \rightarrow NaCNO + 2NaCl + H_2O \qquad \textbf{(8-3)}$$

$$Cl_2 + 4NaOH + 2NaCNO \rightarrow 2CO_2 + N_2 + 6NaCl + 2H_2O \qquad \textbf{(8-4)}$$

Figure 8-8 presents a process flow diagram showing alkaline chlorination of cyanide.

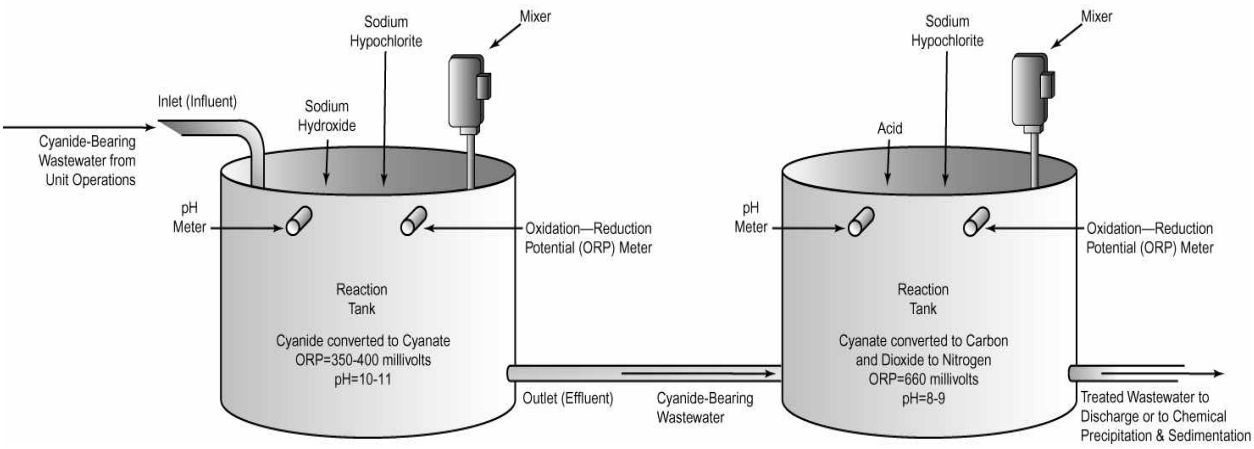

Figure 8-8. Cyanide Destruction Through Alkaline Chlorination

The alkaline chlorination process oxidizes cyanides to carbon dioxide and nitrogen. The equipment often consists of an equalization tank followed by two continuous reaction tanks, although the batch reaction can be conducted in a single tank. Each tank has an electronic controller to monitor and maintain the required pH and ORP. To oxidize cyanides to cyanates, chlorine or sodium hypochlorite is metered to the reaction tank as necessary to maintain the ORP at 350 to 400 millivolts, and aqueous sodium hydroxide is added to maintain a pH of 10 to 11. In the second reaction tank, the ORP and the pH level are typically maintained at 600 millivolts and 8 to 9, respectively, to oxidize cyanate to carbon dioxide and nitrogen. Each reaction tank has a chemical mixer designed to provide approximately one turnover per minute. The batch process is usually conducted by using two tanks, one to collect water over a specified time period and one to treat an accumulated batch. If concentrated wastes are frequently dumped, another tank may be required to equalize the flow to the treatment tank. When the holding tank is full, the liquid is transferred to the reaction tank for treatment.

Alkaline chlorination can be performed at ambient temperature, can be automatically controlled at relatively low cost, and can achieve effluent concentrations of free cyanide that are below the detection limit. Disadvantages include the need for careful pH control, possible chemical interference in treating mixed wastes, and the potential hazard of storing and handling chlorine gas (if sodium hypochlorite is not used). If organic compounds are present, chlorinated organics may be generated. This technology is not effective in treating metallocyanide complexes, such as ferrocyanide.

8.2.3.2 Ozone Oxidation

A less common cyanide treatment method is ozone oxidation. Ozone, generated as a gas, is bubbled through a wastewater solution containing free cyanide. Part of the ozone in

the gas phase is transferred to the solution, where it reacts with cyanide, converting it to cyanate. Additional ozone reacts with the cyanate to convert it to nitrogen gas, ammonia, and bicarbonate, as shown by the reaction below.

$$CN^- + O_3 \text{ -------> } CNO^- + O_2 \qquad \textbf{(8-5)}$$

$$3\ CNO^- + 2O_3 + 2OH^- + 2H_2O \text{ ----------> } 3HCO_3^- + NH_3 + N_2 + 2O_2 \qquad \textbf{(8-6)}$$

The reaction rate is limited by mass transfer of ozone to the liquid, the cyanide concentration, and temperature. Literature data show that amenable cyanide in electroplating wastewaters can be reduced to below detection using the oxidation process. Ozone is not effective in treating metallocyanide complexes, such as ferrocyanide, unless ultraviolet light is added to the reaction tank.

One advantage ozone has over chlorine is the type of residuals formed. Chlorine oxidation of organic compounds has the potential to form trihalomethanes. Ozone oxidizes organic compounds to form relatively less toxic, short-chain organic acids, ketones, and aldehydes. Equipment required for ozone oxidation of cyanides includes an ozone generator, gas diffusion system, a mixed reaction tank, and off-gas controls to prevent the release of unreacted ozone.

The major disadvantage of the ozone oxidation process is the capital and operating cost. Ozone must be manufactured on site and delivered directly to the reaction tank. Ozone generation equipment is expensive, and facilities must also purchase closed reaction tanks and ozone off-gas treatment equipment.

8.2.4 Chelated Metal-Bearing Wastewater

Certain MP&M wastewater contains chelating agents that form metal complexes and interfere with conventional chemical precipitation processes. This wastewater is often associated with electroless plating, and requires specific treatment for the chelated metals. In general, there are three methods of treating these wastewaters:

- Reduction to elemental metal;
- Precipitation as an insoluble compound; and
- Physical separation.

8.2.4.1 Reduction to Elemental Metal

Reduction to elemental metal can be done using one of two methods. One method is electrolytic recovery (see Section 8.1.2.6), in which the dissolved metal is deposited on a cathode for reclamation or disposal. The electric current provides the electrons to reduce the metal ion to its elemental form. The reaction rate and achievable concentration for this

technology depend on the volume of wastewater per unit surface area of cathode. This method typically does not lower metal concentrations enough for wastewater discharge.

The second method uses a reducing agent to provide the electrons to reduce the metal. Possible reducing agents for use in chelated wastewater streams include:

- Sodium borohydride;
- Hydrazine; and
- Sodium hydrosulfite.

Upon reduction, the metal forms a particulate in solution, which can then be removed by conventional solids removal techniques. To be used effectively these reducing agents sometimes require the use of other chemicals for pH adjustment. Figure 8-9 presents a flow diagram showing this method of chemical reduction of chelated metals.

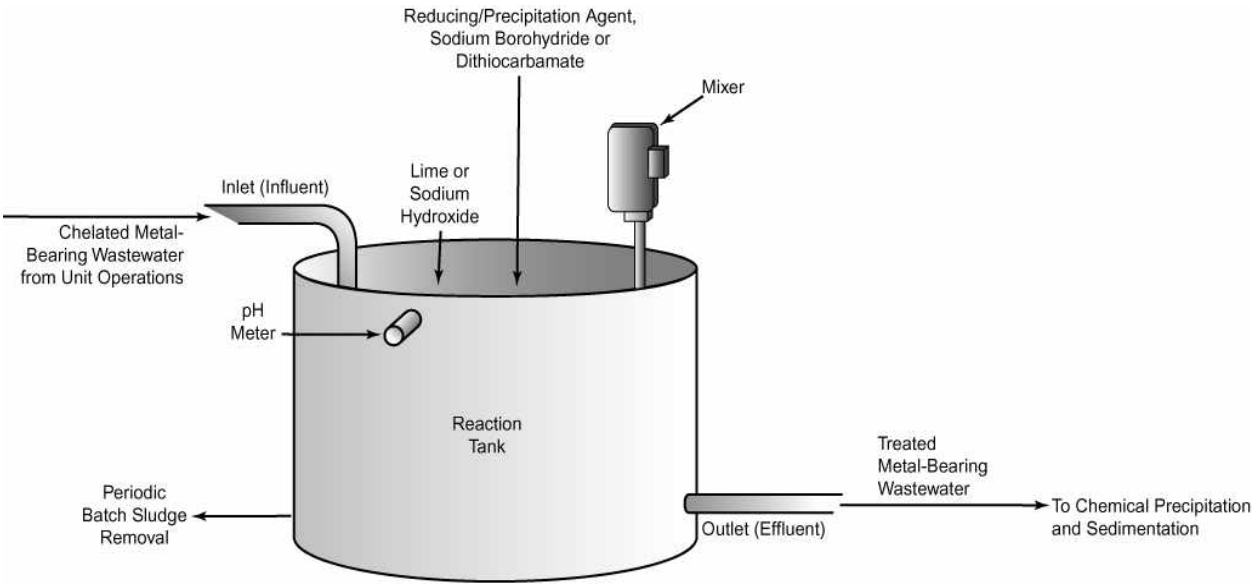

Figure 8-9. Chemical Reduction / Precipitation of Chelated Metals

8.2.4.2 Precipitation of an Insoluble Compound

The presence of chelating agents hinders the formation of hydroxides, making hydroxide precipitation ineffective on chelated metal-bearing wastewaters. Other precipitation methods that are less affected by chelating agents include sulfide precipitation, dithiocarbamate (DTC) precipitation, and carbonate precipitation. Except for DTC precipitation, all of these technologies are discussed in Section 8.3. DTC is added to solution in stoichiometric ratio to the metals present. DTC is effective in treating chelated wastewater; however, DTC compounds are also a class of pesticides and, if used incorrectly, may cause process upsets in the biological treatment used at a POTW and can potentially be harmful to the environment (e.g., lead to fish

kills if DTC passes through the POTW and reaches surface waters). In addition to DTC's potential toxic effects when misused, another disadvantage is DTC precipitation generates large amounts of sludge.

8.2.4.3 Physical Separation

Ion exchange and reverse osmosis can separate metals from solution. These technologies are not affected by chelating agents in the wastewater, making them effective in treating wastewater from electroless plating. These technologies are discussed in section 8.1.2.9 and 8.1.2.10, respectively.

8.2.5 Oil-Bearing Wastewater

Some MP&M wastewater (e.g., alkaline cleaning wastewater and water-based metal-working fluids) contains significant amounts of oil and grease. This wastewater sometimes requires preliminary treatment to remove oil and grease and organic pollutants. Oil/water separation includes the breaking of oil/water emulsions as well as the gravity separation of oil. When only free oil (i.e., non-emulsified oil) is present, only oil skimming is necessary for effective treatment. Techniques available to remove oil include chemical emulsion breaking followed by oil/water separation or dissolved air flotation, oil skimming, and ultrafiltration. EPA describes these technologies in more detail below.

8.2.5.1 Chemical Emulsion Breaking

Chemical emulsion breaking is used to break stable oil/water emulsions (oil dispersed in water, stabilized by electrical charges and emulsifying agents). A stable emulsion will not separate or break down without chemical and or physical treatment. Chemical emulsion breaking is applicable to wastewater containing emulsified coolants and lubricants such as machining and grinding coolants and impact and pressure deformation lubricants. This technology is also applicable to cleaning solutions that contain emulsified oils. Figure 8-10 shows a flow diagram of a type of continuous chemical emulsion breaking system.

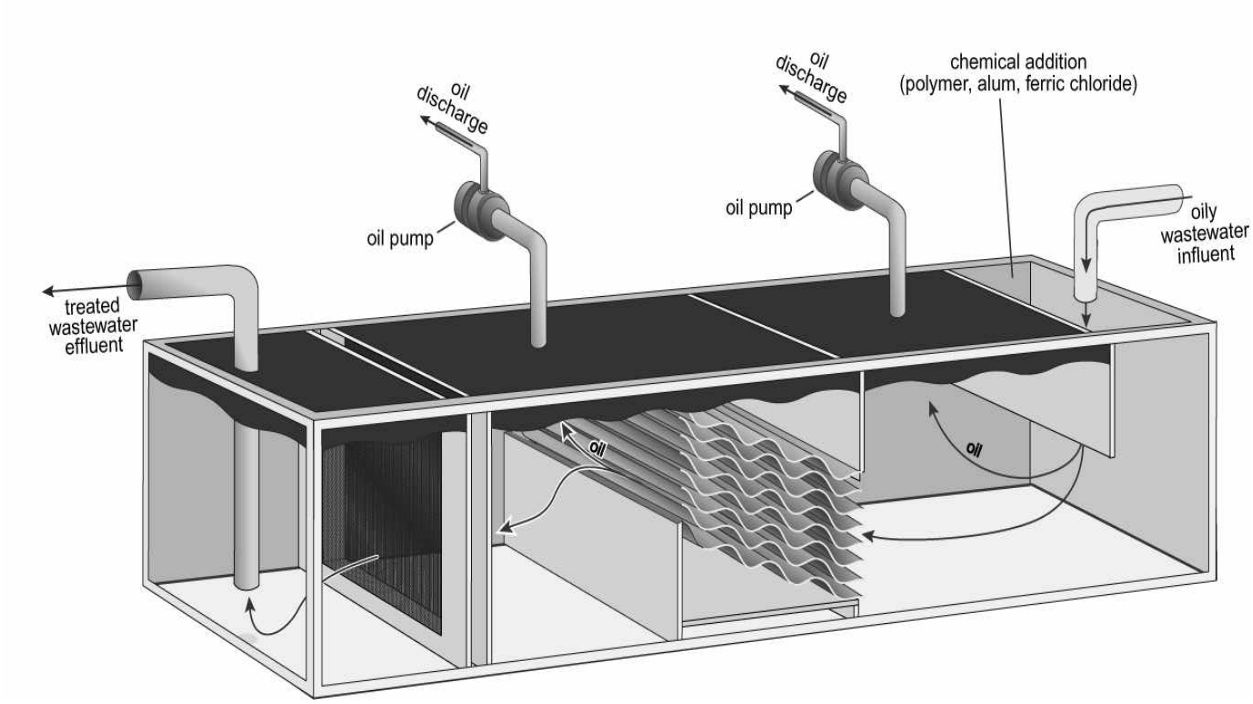

Figure 8-10. Continuous Chemical Emulsion Breaking Unit with Coalescing Plates

Treatment of spent oil/water emulsions involves adding chemicals to break the emulsion followed by oil/water separation. The major equipment required for chemical emulsion breaking includes reaction chambers with agitators, chemical storage tanks, chemical feed systems, pumps, and piping. Factors to be considered for destroying emulsions are type of chemicals, dosage and sequence of addition, pH, mixing, heating requirements, and retention time.

Chemicals (e.g., polymers, alum, ferric chloride, and organic emulsion breakers) break emulsions by neutralizing repulsive charges between particles, precipitating or salting out emulsifying agents, or weakening the interfacial film between the oil and water so it is readily broken. Reactive cations (e.g., H^{+}, Al^{+3}, Fe^{+3}) and cationic polymers are particularly effective in breaking dilute oil/water emulsions. Once the charges have been neutralized or the interfacial film broken, the small oil droplets and suspended solids either adsorb on the surface of the floc that is formed, or break out and float to the top. Different types of emulsion-breaking chemicals are used for different types of oils. If more than one chemical is required, the sequence of adding the chemicals can affect both breaking efficiency and chemical dosages.

Another important consideration in emulsion breaking is pH, especially if cationic inorganic chemicals, such as alum, are used as coagulants. For example, a pH of between 2 and 4 keeps the aluminum ion in its most positive state where it most effectively neutralizes charges. After some of the oil is broken free and skimmed, raising the pH into the 6-to-8 range with lime

or caustic causes the aluminum to hydrolyze and precipitate as aluminum hydroxide. This floc entraps or adsorbs destabilized oil droplets, which can then be separated from the water. Cationic polymers can break emulsions over a wider pH range and thus avoid acid corrosion and the additional sludge generated from neutralization; however, this process usually requires adding an inorganic flocculent to supplement the adsorptive properties of the polymer emulsion breaker.

Mixing is important in effectively breaking oil/water emulsions because it provides proper chemical feed and dispersion. Mixing also causes droplets to collide and break the emulsion and promotes subsequent agglomeration into larger droplets. Heating also improves chemical emulsion breaking by lowering the viscosity and increasing the apparent specific gravity differential between oil and water. In addition, heating increases the frequency of droplet collisions, which helps to rupture the interfacial film.

Once an emulsion is broken, the oil floats to the surface of the water because of the difference in specific gravities between the oil and the water. Solids usually form a layer between the oil and water, since some solids become suspended in the oil. The longer the retention time, the more complete the separation between the oil, solids, and water. Oils and solids are typically skimmed from the surface of the water in a subsequent step after chemical emulsion breaking. Often, other techniques, such as air flotation or rotational separation (e.g., centrifugation), are used to enhance separation after chemical emulsion breaking.

The advantages of chemical emulsion breaking are the high removal efficiency potential and the possibility of reclaiming the oily waste. Disadvantages include corrosion problems associated with acid-alum systems, operator training requirements for batch treatment, chemical sludges produced, and poor efficiency for low oil concentrations.

Chemical emulsion breaking is a very reliable process. The main control parameters are pH and temperature. Maintenance is required on pumps, mixers, instrumentation and valves, and periodic cleaning of the treatment tank is required to remove any accumulated solids. Energy use is typically limited to mixers and pumps, but can also include heating. Solid wastes generated by chemical emulsion breaking include surface oil and oily sludge, which are usually contract hauled for disposal by a licensed contractor. If the recovered oil contains a low enough percentage of water, it may be burned for its fuel value or processed and reused.

8.2.5.2 Oil Skimming

Oil skimming is a physical separation technology that removes free or floating oil from wastewater using the difference in specific gravity between oils and water. Common separation devices include belts, rotating drums, disks, and weir oil skimmers and coalescers. These devices are not suited to remove emulsified oil, which requires chemical treatment, membrane filtration, or other treatment. Figures 8-11a and 8-11b show flow diagrams of disc and belt oil skimming units, respectively, that can be used for small systems or on process tanks. The oil removal system shown in Figure 8-10 is used for large systems.

To separate oil from process solutions, oil skimming devices are typically mounted onto the side of a tank and operated on a continuous basis. The disk skimmer is a vertically rotating disk that is partially submerged in the solution (see Figure 8-11a). The disk continuously revolves between spring-loaded wiper blades that are located above the liquid surface. The disk's adhesive characteristics cause the floating oil to remain on the disk. As the disk's surface passes under the wiper blades, the oil is scraped off and diverted to a run-off spout

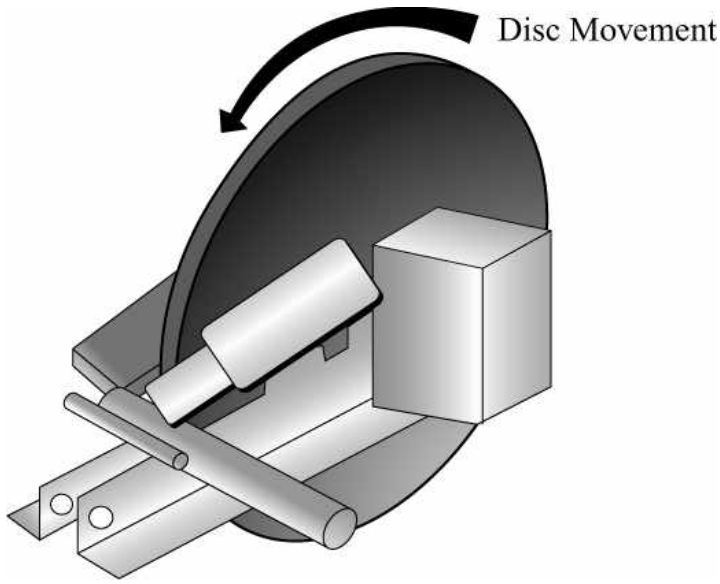

Figure 8-11a. Disc Oil Skimming Unit

for collection. Belt (see figure 8-11b) and drum skimmers operate in a similar manner, with either a continuous belt or drum rotating partially submerged in a tank. As the surface of the belt or drum emerges from the liquid, the oil that adheres to the surface is scraped off (drum) or squeezed off (belt) and diverted to a collection vessel. The oil is typically contract hauled for disposal.

Gravity separators use overflow and underflow weirs to skim a floating oil layer from the surface of the wastewater. A weir allows the oil layer to flow over the weir into a trough for disposal or reuse while most of the water flows underneath the weir. A diffusion device, such as a vertical slot weir, helps create a uniform flow through the system and increase oil removal efficiency.

A skimmer's removal efficiency depends on the composition of the waste stream and the retention time of the water in the tank. Larger, more buoyant particles require less retention time than smaller particles. The retention time necessary for phase separation and subsequent skimming varies from 1 to 15 minutes, depending on the wastewater characteristics.

Gravity-type separators tend to be more effective for wastewater streams with consistently large amounts of surface oil. Drum and belt type skimmers are more applicable to waste streams containing smaller amounts of floating oil. A gravity separator in conjunction with a drum-type skimmer effectively removes floating contaminants from nonemulsified oily waste streams.

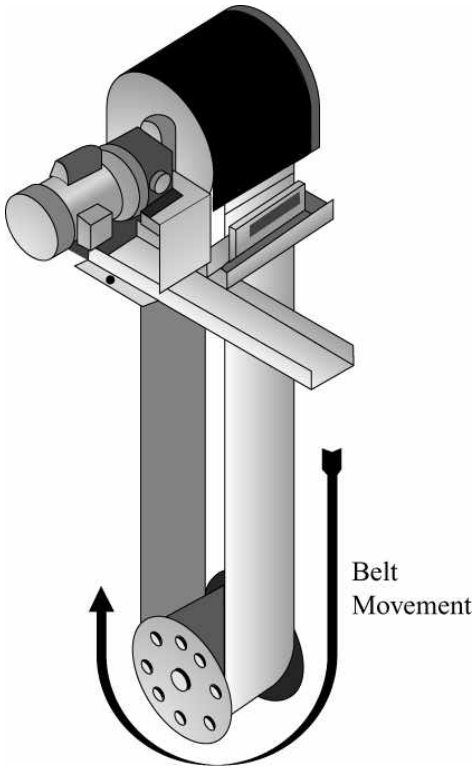

Figure 8-11b.
Belt Oil Skimming Unit

Coalescers remove oil droplets too finely dispersed for conventional gravity separation-skimming technology. Coalescing also reduces the residence times (and therefore separator volumes) required to separate oil from some wastes. The basic principle of coalescence involves the attraction of oil droplets to the coalescing medium (typically plates). The oil droplets accumulate on the medium and then rise to the surface of the solution as they combine to form larger particles. The most important requirements for coalescing media are attraction for oil and large surface area. Coalescing media include polypropylene, ceramic, and glass.

Coalescing stages may be integrated with a wide variety of gravity oil separators, and some systems may incorporate several coalescing stages. A preliminary oil skimming step avoids overloading the coalescer.

Oil separation not only removes oil but also removes organics that are more soluble in oil than in water. Subsequent clarification removes organic solids directly and probably removes dissolved organics by adsorption on inorganic solids. In MP&M operations, sources of these organics are mainly process coolants and lubricants, additives to formulations of cleaners, paint formulations, or leaching from plastic lines and other materials.

8.2.5.3 Flotation of Oils or Solids

Air flotation combined with chemical emulsion breaking is an effective way of treating oily wastewater containing low concentrations of metals. Flotation is used to separate oil and grease from the wastewater, and small amounts of metal will be removed by entrainment or adsorption. In dissolved air flotation (DAF), air is injected into a fluid under pressure. The amount of air that can dissolve in a fluid increases with increasing pressure. When the pressure is released, the air comes out of solution as bubbles, which attach to oil and grease molecules and "float" the oil and grease to the surface. Induced-air flotation uses the same separation principles as DAF systems but the gas is self-induced by a rotor-disperser mechanism.

Figure 8-12 shows a diagram of a DAF unit. A DAF system consists of a pressurizing pump, air injection equipment, pressurizing tank, a pressure release valve, and a flotation tank. DAF systems operate in two modes: full-flow pressurization and recycle pressurization. In full-flow pressurization, all influent wastewater is pressurized and injected with air. The wastewater then enters the flotation unit where the pressure is relieved and bubbles form, causing the oil and grease to rise to the surface with the air bubbles. In recycle pressurization, part of the clarified effluent is recycled back to the influent of the dissolved air flotation unit, then pressurized and supersaturated with air. The recycled effluent then flows through a pressure release valve into the flotation unit. Pressurizing only the recycle reduces the amount of energy required to pressurize the entire influent. DAF is the most common method of air flotation.

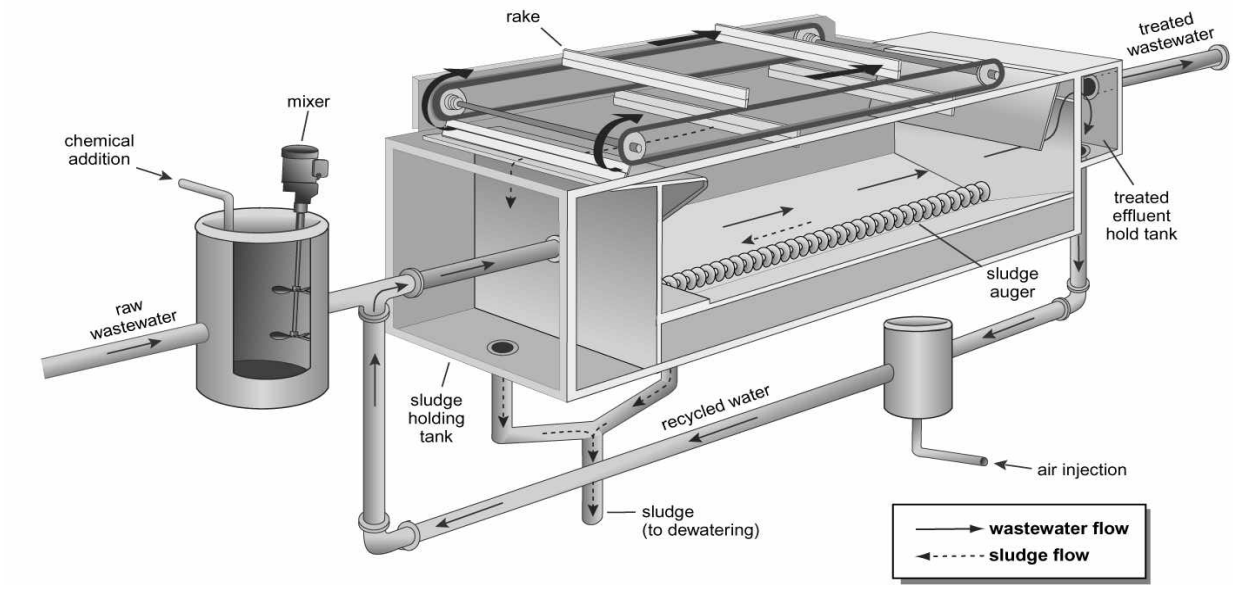

Figure 8-12. Dissolved Air Flotation Unit

8.2.5.4 Ultrafiltration

Ultrafiltration is a membrane-based process used to separate solution components based on molecular size and shape. Using an applied pressure difference across a membrane, solvent and small solute species pass through the membrane and are collected as permeate while the membrane retains larger compounds, which are recovered as concentrate. Figure 8-5 shows a typical membrane filtration unit.

Ultrafiltration typically removes materials ranging from 0.002 to 0.2 microns or molecular-weights from 500 to 300,000. It can be used for the treatment of oily wastewater. Prefiltration of the ultrafiltration influent removes large particles and free oil to prevent membrane damage and fouling. Most ultrafiltration membranes are made of homogeneous polymer or copolymer material. The transmembrane pressure required for ultrafiltration depends on membrane pore size, and typically ranges between 15 to 200 psi.

Ultrafiltration typically produces a concentrated oil phase that is 2 to 5 percent of the influent volume. Oily concentrates are typically contract hauled or incinerated, and the permeate (water phase) can either be treated further to remove water-soluble metals and organics, or be discharged, depending on local and state requirements.

An ultrafiltration system includes: pumps and feed vessels, piping or tubing, monitoring and control units for temperature, pressure, and flow rate; process and cleaning tanks; and membranes. Membranes are specifically designed to handle various waste stream parameters, including temperature, pH, and chemical compatibility. Different types of membranes can be purchased, including hollow fiber, tubular, flat plate, and spiral wound. The type selected depends on the type of application. For example, tubular membranes are commonly used to separate suspended solids, whereas spiral wound membranes are used to separate oil from water. Ultrafiltration designed for oil removal is typically more expensive than dissolved air flotation systems. In terms of maintenance, membranes must be cleaned periodically to ensure effective treatment.

8.3 End-of-Pipe Wastewater and Sludge Treatment Technologies

This section describes end-of-pipe technologies that MP&M facilities can use for wastewater and sludge treatment. Section 8.3.1 discusses metal removal technologies, Section 8.3.2 discusses oil removal technologies, Section 8.3.3 discusses polishing technologies, and Section 8.3.4 discusses sludge-handling technologies.

8.3.1 Metals Removal

The most common end-of-pipe treatment technology used in the MP&M industry to remove dissolved metals is chemical precipitation and flocculation followed by gravity clarification. Microfiltration can be used in place of clarification. The types of equipment used for chemical precipitation vary widely. Small batch operations can be performed in a single tank that typically has a conical bottom to permit removal of settled solids. Continuous processes are usually performed in a series of tanks, including an equalization tank, a rapid-mix tank for dispersing the precipitating chemicals, and a slow-mix tank for adding coagulants and flocculants and for floc formation.

For continuous-flow systems, the first tank in the treatment train is typically the equalization tank. In the chemical precipitation system, the flow equalization tank prevents upsets in processing operations from exceeding the hydraulic design capacity of the treatment system, improves chemical feed control, and provides an opportunity for wastewater neutralization.

Commingled wastewater from the equalization tank enters the rapid mix tank, where various types of precipitation chemicals are added to convert the soluble metals into insoluble compounds. Following precipitation, the wastewater flows into a flocculation tank where polyelectrolytes (polymers) are added, causing the precipitated solids to coagulate into larger particles that can be removed by gravity settling or microfiltration.

Chemical precipitation is a highly reliable technology when proper monitoring and control are used. The effectiveness of metal precipitation processes depends on the types of equipment used and numerous operating factors, such as the characteristics of the raw

wastewater, types of treatment reagents used, and operating pH. In some cases, operational factors need to be optimized to achieve sufficiently low effluent concentrations. Often, subtle changes such as varying the pH, altering chemical dosage, or extending the process reaction time may sufficiently improve its efficiency. In other cases, modifications to the treatment system are necessary. For example, some raw wastewater contains chemicals that may interfere with the precipitation of metals, which may require additional treatment reagents such as ferrous sulfate, sodium hydrosulfate, aluminum sulfate, or calcium chloride. These chemicals may be added prior to or during the precipitation process.

Chemical precipitation systems require routine maintenance for proper operation. Routine maintenance includes: calibrating instrumentation and cleaning probes; maintaining chemical pumps and mixers (inspection, cleaning, lubrication, replacing seals and packing, replacing check valves, cleaning strainers); and monitoring tanks and sumps (inspection, cleaning, corrosion prevention). There are several basic methods of performing chemical precipitation and flocculation and many variations of each method. The four most common methods are described below. Figure 8-13 shows a typical continuous chemical precipitation system.

Hydroxide Precipitation. Hydroxide precipitation is the most common method of removing metals from MP&M wastewater. This process is typically performed in several stages. In an initial tank, which is mechanically agitated, alkaline treatment reagents such as lime (calcium hydroxide or hydrated lime), sodium hydroxide, or magnesium hydroxide are added to the wastewater to precipitate metal ions as metal hydroxides. The reaction for precipitation of a divalent metal using lime is shown in the following equation:

$$M^{2+} + Ca(OH)_2 \rightarrow M(OH)_2 + Ca^{2+} \qquad \textbf{(8-7)}$$

The precipitation process is usually operated at a pH of between 8.5 and 10.0, depending on the types of metals in the wastewater. The pH set point is selected by choosing the value at which metals are most effectively removed. Figure 8-14 shows the effect of pH on hydroxide precipitation. As shown in this figure, most metal hydroxides have an optimum pH (i.e., a minimum solubility point) at which the metal is most effectively precipitated.

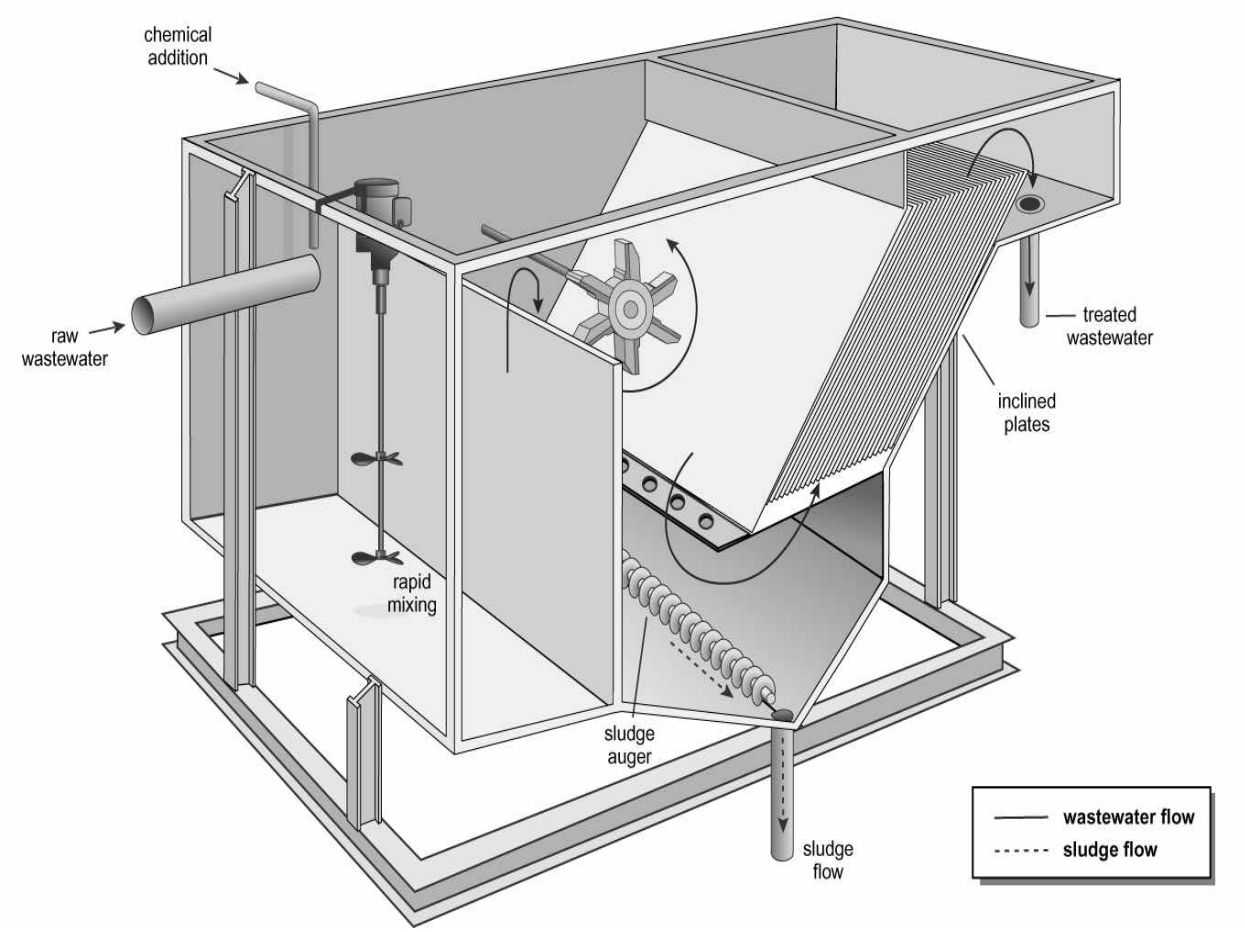

Figure 8-13. Continuous Chemical Precipitation System with Lamella Clarifier

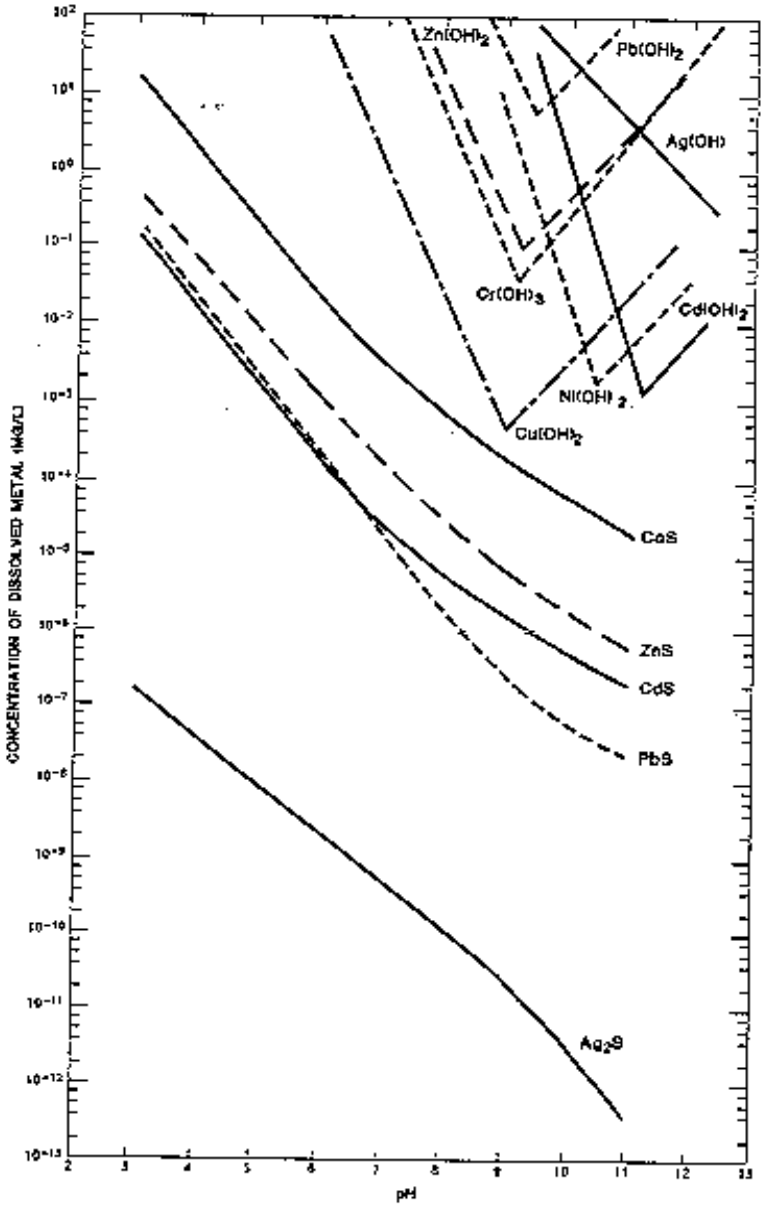

Figure 8-14. Effect of pH on Hydroxide and Sulfide Precipitation

After precipitation, the metal hydroxide particles are very fine and resistant to settling. To increase particle size and improve the settling characteristics of the metal hydroxides, coagulating and flocculating agents are added, usually in a second tank, and slowly mixed. Coagulating and flocculating agents include inorganic chemicals such as alum and ferrous sulfate, and a highly diverse range of organic polyelectrolytes with varying characteristics suitable for different wastewaters. The particles are then settled in a separate clarification tank (e.g., a lamella clarifier), under quiescent conditions, using the difference in density between the solid particles and the wastewater. The solids are removed from the bottom of the settling tank or clarifier, then transferred to a thickener or other dewatering process (see Section 8.3.4). The effluent is either further processed in a polishing unit or discharged.

Sulfide Precipitation. The sulfide precipitation process uses equipment similar to that used for hydroxide precipitation. The major difference between the two processes is the treatment reagents used. Sulfide precipitation uses either soluble sulfides (e.g., hydrogen sulfide or sodium sulfide) or insoluble sulfides (e.g., ferrous sulfide) in place of alkali reagents used in hydroxide precipitation. The sulfide reagents precipitate dissolved metals as metal sulfides, which often have lower solubility limits than metal hydroxides. Therefore, the sulfide precipitation process can (for many metals) reduce the levels of residual dissolved metal in the treated effluent (see Figure 8-14). The sulfide precipitation reaction is shown in the following equation:

$$M^{2+} + FeS \rightarrow MS + Fe^{2+} \qquad \textbf{(8-8)}$$

Unlike hydroxides, sulfide can precipitate most chelated metals and can remove hexavalent chromium without first reducing the chromium to its trivalent state.

The major disadvantages of sulfide precipitation as compared to hydroxide precipitation are higher capital and operating costs and larger sludge generation rates due to the precipitation of ferrous ions. Additional disadvantages of sulfide precipitation are the potential for toxic hydrogen sulfide gas generation, the potential for excessive sulfide releases in the effluent, and the generation of sulfide odors.

Carbonate Precipitation. Carbonate precipitation typically uses sodium carbonate (soda ash), sodium bicarbonate, or calcium carbonate to form insoluble metal carbonates. The reaction is shown in the following equation:

$$M^{2+} + Na_2CO_3 \rightarrow MCO_3 + 2Na^{+} \qquad \textbf{(8-9)}$$

Carbonate precipitation is similar in operation to hydroxide precipitation, and is typically performed to remove metals such as cadmium or lead. For these metals, carbonate precipitation operates at a lower pH to achieve effluent concentrations similar to those achieved by hydroxide precipitation. Carbonate precipitation and hydroxide precipitation are sometimes performed in conjunction, which may improve the overall performance of certain systems.

Carbonate precipitation is less popular than hydroxide precipitation due to the higher cost of treatment reagents and certain operational problems, such as the release of carbon dioxide gas, which can result in foaming and/or floating sludge. Also, since many metal carbonates are more soluble than sulfides or hydroxides, this process is not effective for all metals.

Sodium Borohydride Precipitation. Sodium borohydride precipitation uses sodium borohydride as a reducing agent to precipitate metals from solution as insoluble elemental metals. This reaction is shown in the following equations:

$$4M^{2+} + NaBH_4 + 2H_2O \rightarrow NaBO_2 + 4M + 8H^+ \quad \textbf{(8-10)}$$

$$4M^{2+} + NaBH_4 + 8OH^- \rightarrow NaBO_2 + 4M + 6H_2O \quad \textbf{(8-11)}$$

This process is similar in operation to hydroxide precipitation. Borohydride precipitation is usually performed in a pH range of 8 to 11 to efficiently utilize borohydride. The optimum pH is determined by testing borohydride usage, reaction time, and effluent quality.

Sodium borohydride precipitation effectively removes lead, mercury, nickel, copper, cadmium, and precious metals, such as gold, silver, and platinum, from wastewater. This process has also been reported to reduce sludge generation by 50 percent over traditional precipitation. However, sodium borohydride precipitation is much more expensive than other precipitation methods.

8.3.1.1 Gravity Clarification for Solids Removal

Gravity sedimentation to remove precipitated metal hydroxides is the most common method of clarification (solids removal) used in MP&M facilities. Typically, two types of sedimentation devices are used: inclined-plate (e.g., lamella) clarifiers and circular clarifiers. Figure 8-15 shows a circular clarifier. The continuous chemical precipitation shown in Figure 8-13 uses a lamella clarifier. Lamella clarifiers often provide superior clarification and are more common at MP&M facilities due to the smaller area required when compared to circular clarifiers. Lamella clarifiers typically require 65 to 80 percent of the area required for a circular clarifier. Their design promotes laminar flow through the clarifier, even when the water throughput is relatively high. Lamella clarifiers permit overflow rates at least two to four times greater than conventional clarifiers.

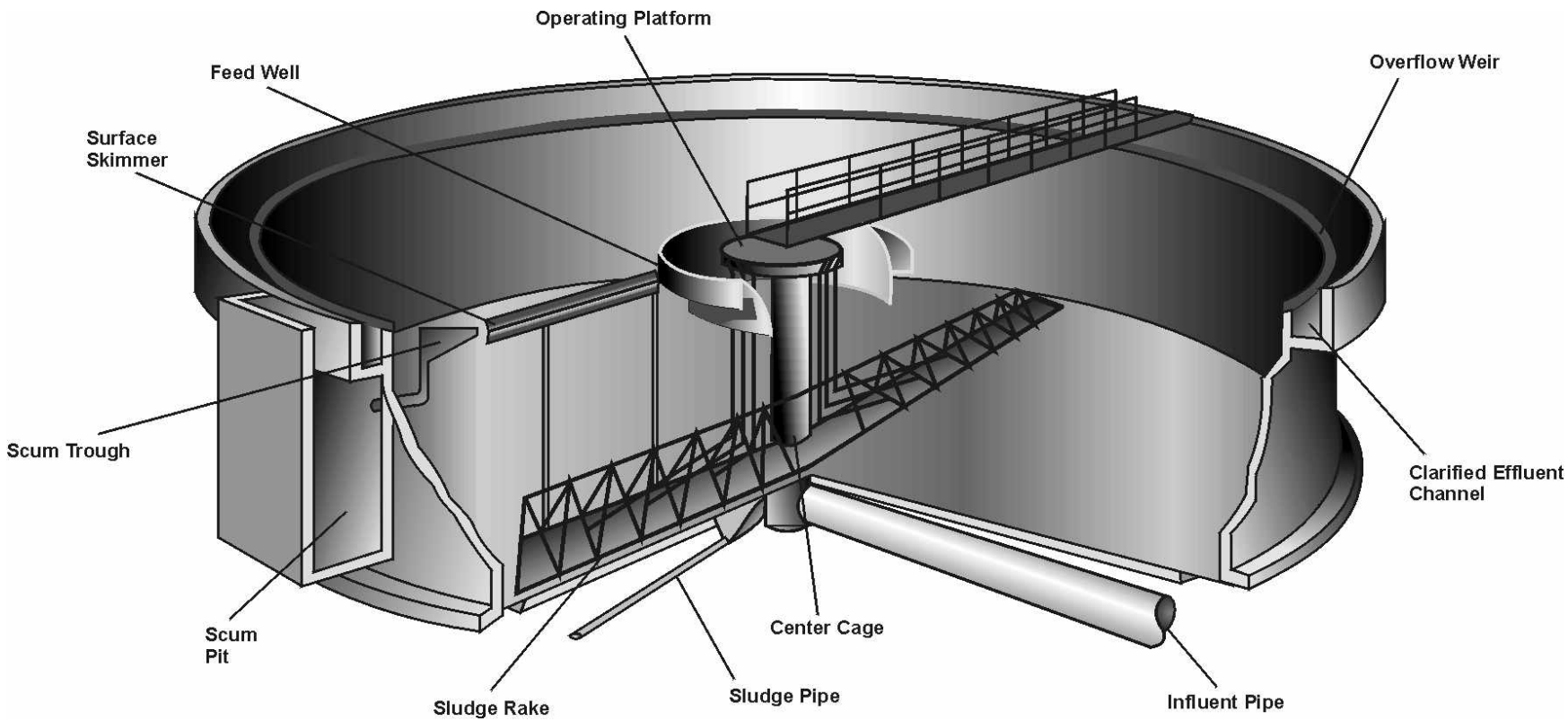

Figure 8-15. Clarifier

Lamella clarifiers contain inclined plates oriented at angles varying between 45 and 60 degrees from horizontal. As the water rises through the plates, the solids settle on the lower side of the plate. The clarified effluent continues up through the plate, passes over a weir, and is collected in an effluent holding tank. The solids collect on the lower side of the plate and slide downward due to the inclination of the plate. The solids collect on the bottom of the clarifier and are scraped into a sludge hopper before discharge to the thickener.

Overflow rates for lamella clarifiers vary from 1,000 to 1,500 gpd/ft^2 for metal hydroxide sludges, assuming the flow is uniformly distributed through the plate settlers. Clarifier inlets must be designed to distribute flow uniformly through the tank and plate settlers. In addition, since solids can build up on plate surfaces, the clarifier should be cleaned periodically. Otherwise, solids may become dislodged from the plates, and degrade effluent quality, and nonuniform buildup may adversely affect flow distribution through the plates.

8.3.1.2 Microfiltration for Solids Removal

Microfiltration can be used as an alternative to conventional gravity clarification after chemical precipitation. Microfiltration is a membrane-based process used to separate small suspended particles based on size and shape. Using an applied pressure difference across a membrane, water and small solute species pass through the membrane and are collected as permeate while larger particles such as precipitated and flocculated metal hydroxides are retained by the membrane and are recovered as concentrate. Microfiltration is similar to ultrafiltration (Section 8.2.5.4) but has a larger pore size.

Microfiltration removes materials ranging from 0.1 to 1.0 microns (e.g., colloidal particles, heavy metal particulates and their hydroxides). Most microfiltration membranes are made of homogeneous polymer material. The transmembrane pressure required for microfiltration typically ranges between 3 to 50 psi, depending on membrane pore size.

Microfiltration produces a concentrated suspended solid slurry that is typically discharged to dewatering equipment such as a sludge thickener and a filter press. The permeate can either be treated further to adjust the pH or be discharged, depending on local and state requirements. Figure 8-5 shows a typical membrane filtration system.

The microfiltration system includes: pumps and feed vessels; piping or tubing; monitoring and control units for temperature, pressure, and flow rate; process and cleaning tanks; and membranes. Membranes are specifically designed to handle various waste stream parameters, including temperature, pH, and chemical compatibility. Different types of membranes can be purchased, including hollow fiber, tubular, flat plate, and spiral wound. The configuration selected for a particular facility depends on the type of application. For example, tubular membranes are commonly used to separate suspended solids, whereas spiral wound membranes are used to separate oils from water. Microfiltration is more expensive than conventional gravity clarification. Membranes must be periodically cleaned to prevent fouling and ensure effective treatment.

8.3.2 Oil Removal

Operations such as machining and grinding, disassembly of oily equipment, and cleaning can generate wastewater containing organic machining coolants, hydraulic oils, and lubricating oils. In addition, shipbuilding facilities may commingle their oily bilge water with other shore-side operations, resulting in a mixed oily wastewater. Data collected during MP&M site visits, sampling episodes, and from the MP&M detailed surveys showed a variety of methods to treat oily wastewater. The primary treatment technologies are emulsion breaking and gravity flotation, emulsion breaking and dissolved air flotation, and ultrafiltration. EPA discussed these technologies in the preliminary treatment section (see Section 8.2.5).

8.3.3 Polishing Technologies

Polishing systems remove small amounts of pollutants that may remain in the effluent after treatment by technologies such as chemical precipitation and clarification and ultrafiltration. These systems can also act as a temporary measure to prevent pollutant discharge should the primary treatment technology fail due to a process upset or catastrophic event. The following is a description of end-of-pipe polishing technologies that are applicable to MP&M facilities.

8.3.3.1 Multimedia Filtration

Multimedia filtration systems are typically used to remove small amounts of suspended solids (metal precipitates) entrained in effluent from gravity clarifiers. Multimedia polishing filters are typically designed to remove 90 percent or greater of all filterable suspended solids 20 microns or larger at a maximum influent concentration of 40 mg/L. Wastewater is pumped from a holding tank through the filter. The principal design factor for the multimedia filter is the hydraulic loading. Typical hydraulic loadings range between 4 and 5 gpm/ft^2. Multimedia filters are cleaned by backwashing with clean water. Backwashing is timed to prevent breakthrough of the suspended solids into the effluent. Figure 8-16 shows a diagram of a multimedia filtration system.

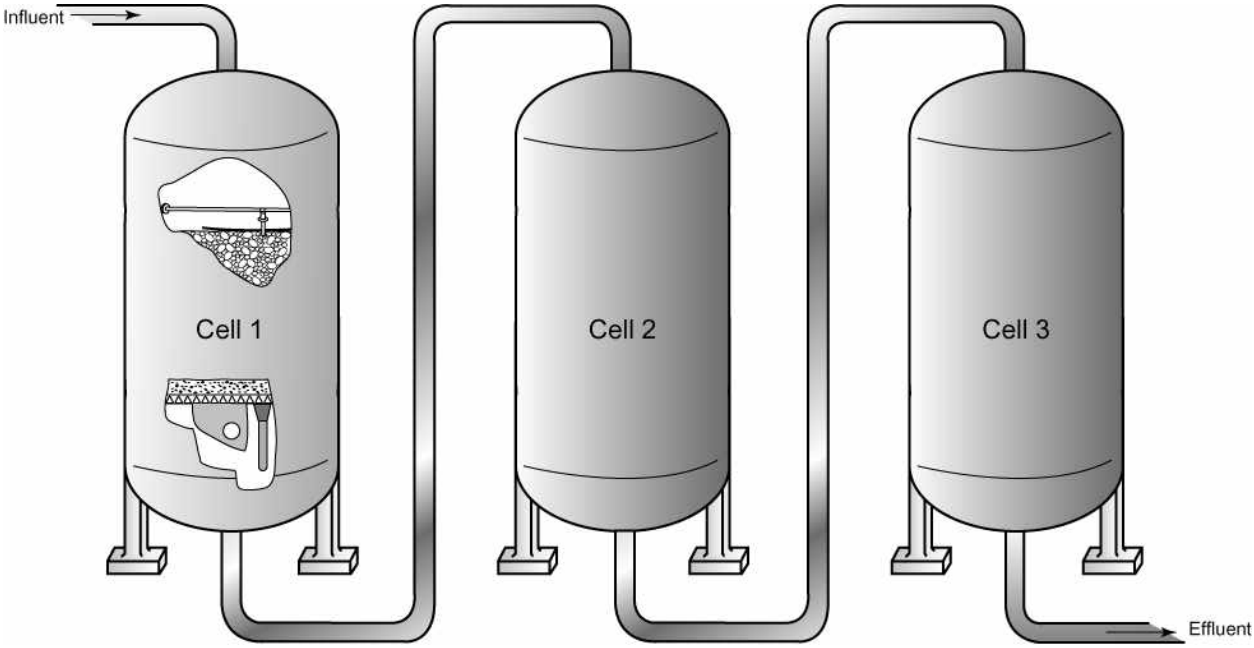

Figure 8-16. Multimedia Filtration System

8.3.3.2 Activated Carbon Adsorption

Activated carbon adsorption removes dissolved organic compounds from wastewater streams. For some MP&M facilities, carbon adsorption is used to polish effluent from ultrafiltration systems treating oily wastewater. During adsorption, molecules of a dissolved compound adhere to the surface of an adsorbent solid. Activated carbon is an excellent adsorption medium due to its large internal surface area, generally high attraction to organic pollutants, and hydrophobic nature (i.e., water will not occupy bonding sites and interfere with the adsorption of pollutants). Pollutants in the wastewater bond on the activated carbon grains until all the surface bonding sites are occupied. At that point, the carbon is considered to be "spent." Spent carbon requires regeneration, which results in reduced adsorption capacity compared to fresh carbon. After several regenerations, the carbon is disposed.

The carbon is placed in granular carbon system vessels, forming a "filter" bed. Vessels are usually circular for pressure systems or rectangular for gravity flow systems. For wastewater treatment, activated carbon is typically packed into one or more filter beds or columns; a typical treatment system consists of multiple filter beds in series. Wastewater flows through the filter beds and is allowed to come in contact with all portions of the activated carbon. The activated carbon in the upper portion of the column is spent first (assuming flow is downward), and progressively lower regions of the column are spent as the adsorption zone moves down the unit. When pollutant concentrations at the bottom of the column begin to

increase above acceptable levels, the entire column is considered spent and must be regenerated or removed.

8.3.3.3 Reverse Osmosis

Reverse osmosis is a membrane separation technology used by the MP&M industry as an in-process step or as an end-of-pipe treatment. Section 8.2 discusses in-process reverse osmosis. In an end-of-pipe application, reverse osmosis is typically performed to recycle water and reduce discharge volume rather than recover chemicals. The effluent from a conventional treatment system generally has a TDS concentration unacceptable for most rinsing operations, and cannot be recycled. TDS concentrations can be reduced by reverse osmosis membranes with or without some pretreatment, and the resulting effluent stream can be used for most rinsing operations.

8.3.3.4 Ion Exchange

Ion exchange is used for both in-process and end-of-pipe applications. Section 8.2 discusses in-process ion exchange. Ion exchange may also be used as an end-of-pipe final polishing step, or to recycle water. This technology generally uses cation resins to remove metals but sometimes both cation and anion columns are used. The regenerant from end-of-pipe ion exchange is not usually amenable to metals recovery as it typically contains multiple metals at low concentrations.

8.3.4 Sludge Handling

EPA discusses the following sludge-handling technologies in this section.

- Gravity thickening;
- Pressure filtration;
- Sludge drying; and
- Vacuum filtration.

8.3.4.1 Gravity Thickening

Gravity thickening is a physical liquid-solid separation technology used to dewater wastewater treatment sludge. Sludge is fed from a primary settling tank or clarifier to a thickening tank, where gravity separates the supernatant (liquid) from the sludge, increasing the sludge density. The supernatant is returned to the primary settling tank or the head of the treatment system for further treatment. The thickened sludge that collects on the bottom of the tank is pumped to additional dewatering equipment or contract hauled for disposal. Figure 8-17 shows a diagram of a gravity thickener.

Gravity thickeners are generally used in facilities where the sludge is to be further dewatered by a mechanical device, such as a filter press. Increasing the solids content in the

thickener substantially reduces capital and operating costs of the subsequent dewatering device and also reduces the hauling cost. This process is potentially applicable to any MP&M site that generates sludge.

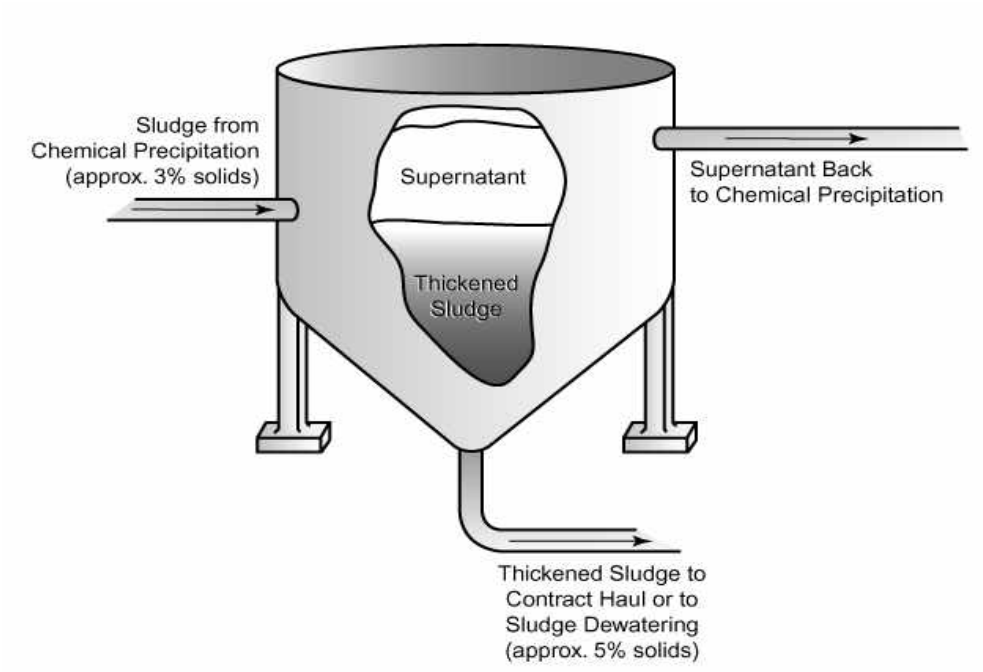

Figure 8-17. Gravity Thickening

8.3.4.2 Pressure Filtration

The filter press is the most common type of pressure filtration used in the MP&M industry for dewatering wastewater treatment sludges. A filter press consists of a series of parallel plates pressed together by a hydraulic ram (older models may have a hand crank), with cavities between the plates. Figure 8-18 shows a diagram of a plate-and-frame filter press. The filter press plates are concave on each side to form cavities and are covered with a filter cloth. At the start of a cycle, a hydraulic pump clamps the plates tightly together and a feed pump forces a sludge slurry into the cavities of the plates. The liquid (filtrate) escapes through the filter cloth and grooves molded into the plates and is forced by the pressure of the feed pump (typically around 100 psi) to a discharge port. The solids are retained by the cloth and remain in the cavities. This process continues until the cavities are packed with sludge solids. An air blow-down manifold is used on some units at the end of the filtration cycle to drain remaining liquid from the system, further drying the sludge. The pressure is then released and the plates are separated. The sludge solids or cake is loosened from the cavities and falls into a hopper or drum. A plate filter press can produce a sludge cake with a dryness of approximately 25 to 40

percent solids for metal hydroxides precipitated with sodium hydroxide, and 35 to 60 percent solids for metal hydroxides precipitated with calcium hydroxide. The final solids content depends on the length of the drying cycle. Filter presses are available in a very wide range of capacities (0.6 ft^3 to 20 ft^3). A typical operating cycle is from 4 to 8 hours, depending on the dewatering characteristics of the sludge. Units are usually sized based on one or two cycles per day.

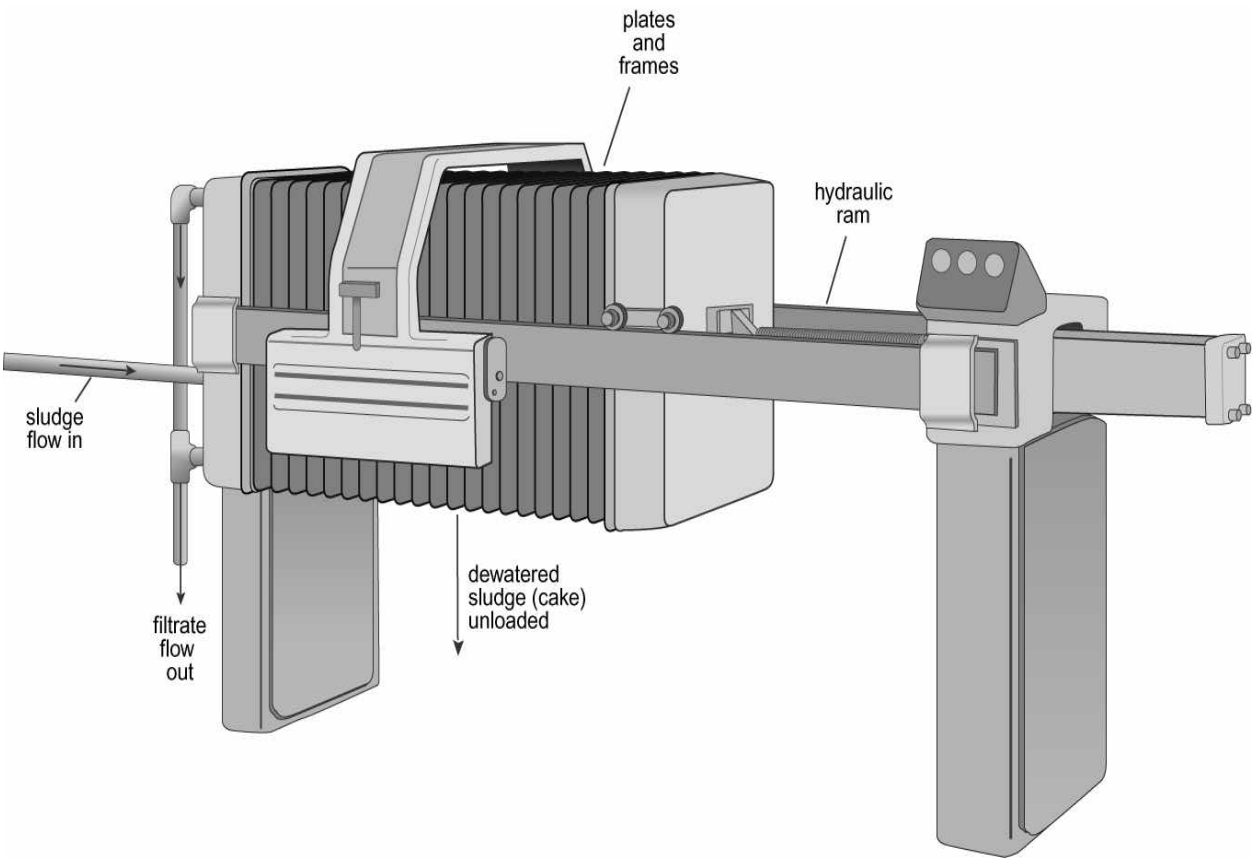

Figure 8-18. Plate-and-Frame Filter Press

8.3.4.3 Vacuum Filtration

Vacuum filtration is performed at some MP&M sites to reduce the water content of sludge, increasing the solids content from approximately 5 percent to between 20 and 30 percent. These MP&M sites generally use cylindrical drum vacuum filters. The filters on these drums are typically either made of natural or synthetic fibers or a wire-mesh fabric. The drum is dipped into a vat of sludge and rotates slowly. A vacuum inside the drum draws sludge to the filter. Water is drawn through the filter to a discharge port, and the dewatered sludge is scraped from the filter. Because dewatering sludge with a vacuum filter is relatively expensive per kilogram of water removed, the liquid sludge is frequently gravity-thickened prior to vacuum filtration. Figure 8-19 shows a typical vacuum filter. Vacuum filters are frequently used both in

municipal treatment plants and in a wide variety of industries. They are most commonly used in larger facilities, which may have a thickener to double the solids content of clarifier sludge before vacuum filtering. Often a precoat is used to inhibit filter binding.

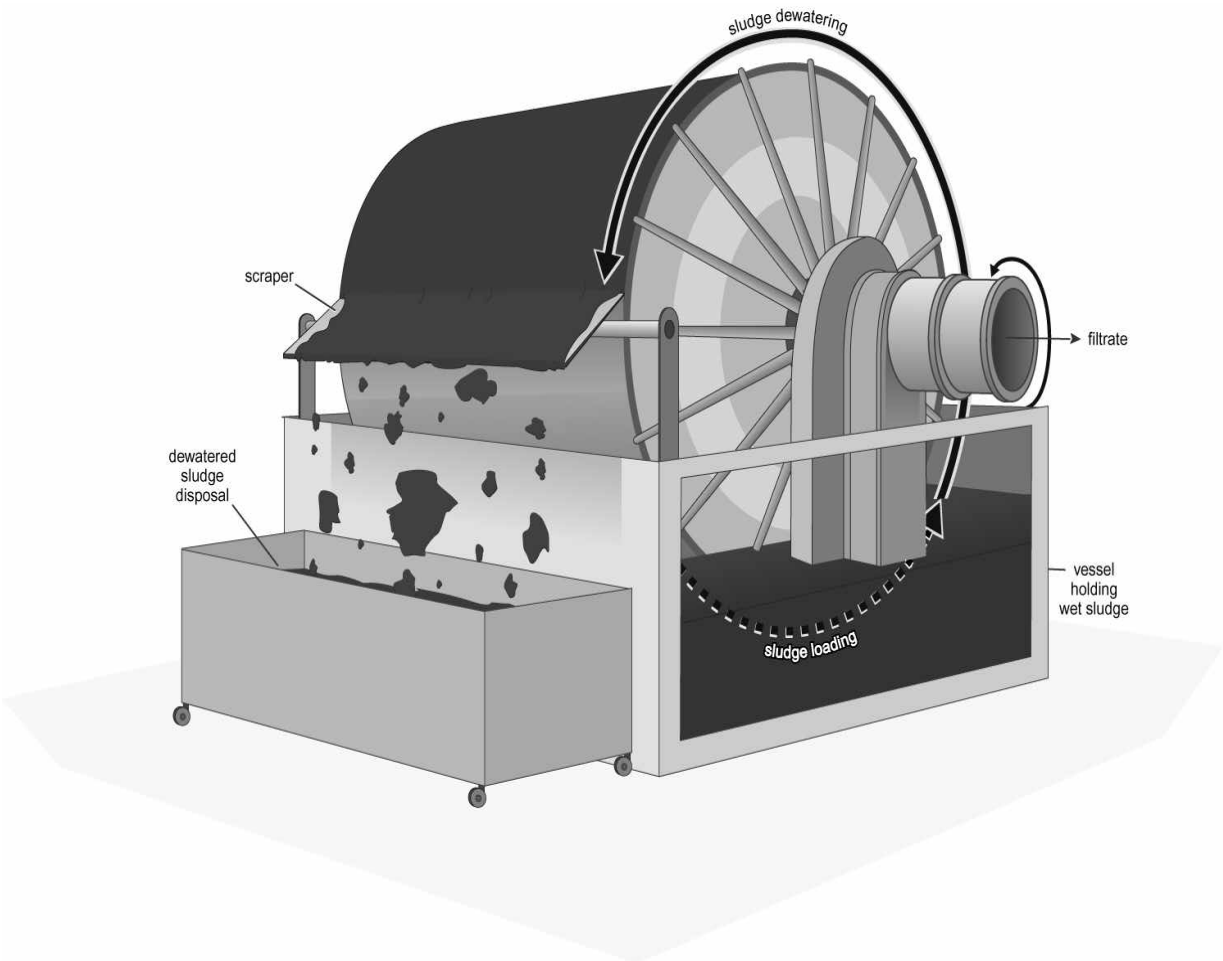

Figure 8-19. Rotary Vacuum Filter

Maintenance of vacuum filters involves cleaning or replacing the filter media, drainage grids, drainage piping, filter parts, and other parts. Since maintenance time may be as high as 20 percent of total operating time, facilities may maintain one or more spare units. If this technology is used intermittently, the facility may drain and wash the filter equipment each time it is taken out of service.

8.3.4.4 Sludge Drying

Wastewater treatment sludges are often hauled long distances to disposal sites. The transportation and disposal costs depend mostly on the volume of sludge, which is directly related to its water content. Therefore, many MP&M sites use sludge drying equipment following dewatering or vacuum filtration to further reduce the volume of the sludge. The solids content of the sludge dewatered on a filter press usually ranges from 25 to 60 percent. Drying equipment can produce a waste material with a solids content of approximately 90 percent.

There are several design variations for sludge drying equipment. A commonly used system consists of an auger or conveyor system to move a thin layer of sludge through a drying region and discharge it into a hopper. Various heat sources including electric, electric infrared, steam, and gas are used for sludge drying. Some continuous units are designed such that the sludge cake discharged from a filter press drops into the feed hopper of the unit, making the overall dewatering process more automated. System capacities range from less than 1 ft^3/hr to more than 20 ft^3/hr of feed. Sludge drying equipment requires an air exhaust system due to the fumes generated during drying.

8.4 References

1. U.S. Environmental Protection Agency. Facility Pollution Prevention Guide. EPA-600-92-088, Washington, DC. 1992.

2. U.S. Environmental Protection Agency. Development Document for Effluent Limitations Guidelines and Standards for the Nonferrous Metals Forming and Metal Powders Point Source Category. EPA 440-1-86-019, September, 1996.

3. Cherry, K.F. Plating Waste Treatment. Ann Arbor Sciences Publishers, Inc., Ann Arbor, Michigan, 1982.

4. Freeman, H.M. Standard Handbook of Hazardous Waste Treatment and Disposal. McGraw Hill Book Company, New York, 1989.

5. Cushnie, George C., Pollution Prevention and Control Technology for Plating Operations, National Center for Manufacturing Sciences, 1994.

6. Eckenfelder, W. Wesley. Industrial Water Pollution Control. McGrawHill, 2000.

7. Letterman, Raymond D., Water Quality and Treatment: A Handbook of Community Water Supplies, Fifth Edition, Mc-Graw Hill, 1999.

9.0 TECHNOLOGY OPTIONS

This section describes the technology options that EPA used in developing the Metal Products and Machinery (MP&M) effluent limitations guidelines and standards. EPA developed these options based on the technologies described in Section 8.0. Section 9.1 summarizes the methodology EPA used to select the technologies included in the options. Section 9.2 describes the technology options in detail. **The Agency selected the technologies included in each option for development of the MP&M effluent limitations guidelines and standards. EPA does not require sites to implement these specific technologies to comply with the MP&M effluent guidelines; sites can install any technology (or completely eliminate their discharge through contract hauling or recycling as long as they achieve the final effluent limitations.** EPA used these technology options to estimate pollutant loadings and reductions (Section 12.0) and compliance costs (Section 11.0) and to develop the MP&M effluent limitations guidelines and standards.

The MP&M technology options consist of groups of pollution prevention and wastewater treatment technologies identified to reduce or eliminate the generation or discharge of pollutants from MP&M sites. EPA identified these technologies from responses to the MP&M detailed and screener surveys, MP&M site visits and sampling episodes, and technical literature (including case studies and development documents for previously promulgated metals industry regulations).

9.1 Technology Evaluation Methods

MP&M sites generate wastewater containing oils, organic pollutants, cyanide, hexavalent chromium, complexed metals, and dissolved metals. The MP&M industry uses many different types of technologies to control and treat wastewater, including both in-process pollution prevention technologies and end-of-pipe treatment and disposal technologies. To determine technology options for each subcategory, EPA evaluated information collected from site visits, sampling episodes, and MP&M screener and detailed surveys. EPA then grouped the most prevalent technologies according to the type of wastewater which they treat (i.e., oily wastewater, metal-bearing wastewater, cyanide-bearing wastewater, etc.). The Agency evaluated treatment efficiency in terms of percent removal and final concentration (mg/L) from sampling episode data, discharge monitoring reports, and periodic compliance reports.

EPA classified the technologies into one of the four tiers of the Environmental Management Hierarchy (EMH) from EPA's Facility Pollution Prevention Guide (1). This hierarchy attempts to prioritize technologies in order of importance or benefit to the environment from source reduction (highest priority) to disposal (lowest priority). Tables 9-1 through 9-3, presented at the end of this section, provide data on the technologies considered for the MP&M options, grouped by their EMH classification as follows:

1. Table 9-1: Source reduction and pollution prevention technologies - EMH tier 1;

2. Table 9-2: Recycling technologies - EMH tier 2; and

3. Table 9-3: End-of-pipe treatment and disposal technologies - EMH tiers 3 and 4.

The tables present the following for each technology: a brief technology description; the number of sites visited by EPA using the technology; the number of survey respondents reporting using the technology; the estimated number of sites in the MP&M industry currently using the technology; and comments noting if EPA included the technology in the MP&M technology options (as discussed in Section 9.2) and, where appropriate, reasons why EPA did not include the technology. Each of the pollution prevention, recycling and treatment technologies are described in detail in Section 8.0.

The demonstration of source reduction and some recycling technologies in the MP&M industry was only quantifiable from the data collected in the MP&M 1996 detailed survey responses. However, as shown on these tables, EPA observed most of these technologies during visits to MP&M sites. The most frequently observed and/or reported source reduction and recycling technologies were:

- Centrifugation of machining coolants;
- Centrifugation of painting water curtains;
- Conductivity probes;
- Countercurrent cascade rinsing;
- Drag-out rinsing;
- Electrolytic recovery;
- Flow restrictors;
- In-tank filtration;
- Ion exchange; and
- Regeneration of process baths.

In addition, many of the sites that EPA visited used plant maintenance and good housekeeping practices that resulted in source reduction.

Table 9-3 presents some of the most common end-of-pipe treatment technologies in the MP&M industry:

- Chelation breaking/precipitation to remove complexed metals;
- Chemical emulsion breaking followed by gravity separation for oil removal;
- Chemical emulsion breaking followed by dissolved air flotation (DAF) for oil removal;
- Chemical precipitation and gravity settling for solids removal;
- Chemical precipitation and microfiltration for solids removal;
- Chemical reduction of hexavalent chromium;
- Cyanide destruction through alkaline chlorination;

- Gravity settling of wastewater (without chemical addition);
- Gravity thickening of sludge;
- Multimedia filtration (including sand filtration);
- Neutralization (without solids removal);
- Pressure filtration of sludge; and
- Ultrafiltration for oil removal.

In addition, an estimated 31,000 of the 63,000 water-discharging MP&M sites contract-haul some of their wastewater for off-site treatment and disposal. Many sites with treatment technologies in place also contract-haul wastewater treatment sludges for off-site disposal.

9.2 Technology Options

EPA considered a technology to be demonstrated in the MP&M industry if the technology effectively treated MP&M wastewater and if EPA observed the technology during at least one MP&M site visit or at least one survey respondent reported using the technology. EPA evaluated the performance of each technology using available analytical data from MP&M sampling episodes, analytical data from previous effluent guidelines data collection efforts, and quantitative and qualitative assessments from engineering site visits and literature.

EPA identified ten technology options for the MP&M industry subcategories. Table 9-4 shows the options for each subcategory and the technologies used to establish effluent limitations and standards. The following sections discuss the wastewater treatment technologies included in each subcategory. Figures 9-1 through 9-6 present the technology trains for the options.

9.2.1 General Metals, Metal Finishing Job Shops, Printed Wiring Boards, Steel Forming and Finishing, and Non-Chromium Anodizing Subcategories

EPA evaluated four wastewater treatment technology options for the MP&M industry subcategories whose unit operations primarily produce metal-bearing wastewater (but may also produce some oily wastewater). Each of these options are discussed below.

Option 1

Option 1 includes segregation of wastewater streams, preliminary treatment steps as necessary (including oil removal using oil water separation by chemical emulsion breaking), chemical precipitation using either sodium hydroxide or lime, and sedimentation using a clarifier. Segregation of wastewater and subsequent preliminary treatment allows for the most efficient, effective, and economic means for removing pollutants in certain wastewater streams. These streams contain pollutants (e.g., oil and grease, cyanide, hexavalent chromium, chelated metals, and organic solvents) that can inhibit the performance of chemical precipitation and sedimentation treatment, while increasing the overall treatment costs. For example, if a facility segregates its oil-bearing wastewater from its metal-bearing

wastewater, then the facility can design an oil removal treatment technology based on only the oily waste flow volume and not on the combined metal-bearing and oil-bearing wastewater flow, decreasing the size of the overall treatment system. Treatment chemical costs are also reduced because of the reduced volume. Preliminary treatment technologies for these types of wastewater streams are described below. (See Section 5.0 for a more detailed description of each of these wastewater streams).

- **Oil-Bearing Wastewater**. Alkaline cleaning wastewater and water-based metal-working fluids (e.g., machining and grinding coolants) typically contain significant amounts of oil and grease. These wastewater streams require preliminary treatment to remove oil and grease and organic pollutants. Chemical emulsion breaking followed by gravity separation of oil and water (oil/water separator or gravity flotation) effectively removes these pollutants.

- **Cyanide-Bearing Wastewater**. The MP&M industry generates several types of wastewater that may contain significant amounts of cyanide, such as plating and cleaning wastewater. This wastewater requires preliminary treatment to destroy the cyanide, typically performed using alkaline chlorination with sodium hypochlorite or chlorine gas (3).

- **Hexavalent Chromium-Bearing Wastewater**. The MP&M industry generates several types of wastewater that contain hexavalent chromium, usually generated by acid treatment, anodizing, conversion coating, and electroplating. Because hexavalent chromium does not form an insoluble hydroxide and is not treated by chemical precipitation and sedimentation, this wastewater requires chemical reduction of the hexavalent chromium to trivalent chromium. Trivalent chromium forms an insoluble hydroxide and is treated by chemical precipitation and sedimentation. Sodium metabisulfite or gaseous sulfur dioxide are typically used as reducing agents for hexavalent chromium-containing wastewater.

- **Chelated Metal-Bearing Wastewater**. Electroless plating and some cleaning operations generate water that contains significant amounts of chelated metals. This wastewater requires chemical reduction to break the metal-chelate bond or reduce the metal-chelate complex to an insoluble state so that it can be removed during chemical precipitation. Sodium borohydride, dithiocarbamate, hydrazine, and sodium hydrosulfite are used as reducing agents.

- **Organic Solvent-Bearing Wastewater**. Option 1 also includes contract-hauling of solvent degreasing wastewater. Based on the MP&M surveys and site visits, most solvent degreasing operations which use organic solvents (e.g., 1,1,1-trichloroethane, trichloroethene), are contract-hauled for off-site

recycling. Some MP&M sites reported using organic solvent-water mixtures or rinses following organic solvent degreasing. EPA found contract-hauling of this wastewater to be the most common disposal method for these sites.

After pretreatment of the segregated streams, chemical precipitation and gravity clarification is used to remove total and dissolved metals. Chemical precipitation involves adjusting the pH of the wastewater with alkaline chemicals such as lime (calcium hydroxide) or caustic (sodium hydroxide) or acidic chemicals (such as sulfuric acid) to produce insoluble metal hydroxides. This step is followed by a gravity settling process in a clarifier to remove the precipitated and flocculated metal hydroxides by gravity settling (2). Segregation of wastewater streams, preliminary treatment, and final chemical precipitation and gravity sedimentation is widely used throughout the metals industry and is well documented as being effective in removing pollutants present in MP&M wastewater.

Option 2

Option 2 builds on Option 1 by adding in-process pollution prevention, recycling, and water conservation methods that allow for recovery and reuse of materials. These technologies can reduce manufacturing costs by allowing materials to be used over a longer period before they need to be disposed. Using these techniques or technologies along with water conservation also leads to the generation of less pollution and results in more effective treatment of the wastewater that is generated. Specific Option 2 in-process pollution prevention, recycling and water conservation methods include:

- Countercurrent cascade rinsing for all flowing rinses;
- Centrifugation and recycling of painting water curtains; and
- Centrifugation and pasteurization to extend the life of water-soluble machining coolants.

EPA observed these pollution prevention and water conservation technologies at MP&M sites during site visits and sampling episodes. These technologies were also reported in the MP&M surveys and documented in various literature sources (4,5).

Sites reducing their wastewater flow rates and increasing their influent pollutant concentrations will more effectively treat the wastewater, reducing the mass of pollutants discharged in the treated effluent. For example, a site that generates 2,600 gallons (10,000 liters) per day of raw wastewater containing 10 mg/L of pollutants prior to treatment, implements water reduction and recovery technologies that reduce the flow to 1,300 gallons (5,000 liters) per day and increase the pollutant concentration to 20 mg/L prior to treatment. If the long-term average effluent concentration of a pollutant was 0.1 mg/L, the site would discharge 1,000 mg/day of pollutant (10,000 L/day times 0.1 mg/L) prior to implementing flow reduction and recovery technologies, and 500 mg/day of pollutant (5,000 L/day times 0.1 mg/L) after implementing the technologies.

EPA based the BPT, BCT and BAT proposed effluent limitations guidelines on Option 2 for existing direct dischargers in the General Metals, Metal Finishing Job Shops, Non-Chromium Anodizing, Printed Wiring Board, and Steel Forming and Finishing Subcategories. EPA also based the proposed pretreatment standards for existing sources (PSES) on Option 2 for the General Metals, Metal Finishing Job Shops, Printed Wiring Boards, and Steel Forming and Finishing Subcategories. EPA did not propose PSES nor pretreatment standards for new sources (PSNS) for the Non-Chromium Anodizing Subcategory. EPA proposed new source performance standards (NSPS) for new direct dischargers in the Non-Chromium Anodizing Subcategory based on Option 2.

Option 3

This option differs from Option 1 in that an ultrafilter replaces the chemical emulsion breaking and oil/water separator for the removal of oil and grease, and a microfilter, rather than a clarifier, follows chemical precipitation. Ultrafiltration is a separation technology that allows water and small solute species to pass through a semi-porous membrane under pressure while emulsified oils are retained by the membrane and recovered as concentrate (2). EPA determined through sampling episodes that ultrafiltration systems are very effective for the removal of oil and grease at MP&M facilities. Ultrafilters sampled by EPA achieved oil and grease removals of greater than 99 percent. The emulsion breaking and gravity flotation system described in Options 1 and 2 removed approximately 96 percent of the oil and grease from the MP&M wastewater.

Microfiltration uses a pressure-driven membrane process to separate wastewater constituents based on size and shape. Using an applied pressure difference across a membrane, solvent and small solute species pass through the membrane and are collected as permeate. Larger constituents such as flocculated metal hydroxide particles generated during chemical precipitation are retained by the membrane and recovered as a concentrated solids slurry. EPA collected treatment effectiveness data for solids removal after chemical precipitation through microfiltration. Well-operated chemical precipitation and microfiltration systems sampled by EPA at MP&M facilities achieved an average removal of 99.6 percent for targeted metals. Well-operated chemical precipitation and gravity clarification systems sampled by EPA at MP&M facilities achieved an average removal of 96.7 percent for targeted metals.

Option 4

Option 4 includes technologies in Option 3 plus in-process flow control and pollution prevention technologies described in Option 2, allowing for recovery and reuse of materials along with water conservation. EPA based the NSPS and PSNS (new source) limitations and standards on Option 4 for the General Metals, Metal Finishing Job Shops, Printed Wiring Boards, and Steel Forming and Finishing Subcategories.

9.2.2 Oily Wastes Subcategory

EPA evaluated four wastewater treatment options for the Oily Wastes Subcategory. EPA defines the Oily Wastes Subcategory as those facilities that only discharge wastewater from one or more of the following unit operations: alkaline cleaning for oil removal, aqueous degreasing, corrosion preventive coating, floor cleaning, grinding, heat treating, impact deformation, machining, painting, pressure deformation, solvent degreasing, testing (e.g., hydrostatic, dye penetrant, ultrasonic, magnetic flux), steam cleaning, and laundering. EPA is defining "corrosion preventive coating" as the application of removable oily or organic solutions to protect metal surfaces against corrosive environments. Corrosion preventive coatings include, but are not limited to: petrolatum compounds, oils, hard dry-film compounds, solvent-cutback petroleum-based compounds, emulsions, water-displacing polar compounds, and fingerprint removers and neutralizers. Corrosion preventive coating does not include electroplating or chemical conversion coating (including phosphate conversion coating) operations. Technology options used to establish effluent limitations are discussed below.

Option 5

Effluent limitations for Option 5 are based on end-of-pipe chemical emulsion breaking followed by gravity separation using an oil/water separator. EPA performed sampling episodes at several facilities in the Oily Wastes Subcategory that employed chemical emulsion breaking followed by gravity flotation and oil skimming. These systems typically achieved a 96 percent removal of oil and grease. Breaking the oil/water emulsion requires the addition of treatment chemicals such as acid, alum, and/or polymers to change the emulsified oils or cutting fluids from hydrophilic colloids to aggregated hydrophobic particles. The aggregated oil particles, with a density less than water, can be removed by gravity flotation in a coalescing plate oil/water separator. This treatment train is widely used throughout the metals industry and is well documented as effectively removing machining coolants, emulsified hydraulic oils, and organic pollutants present in oily MP&M wastewater.

Option 6

Option 6 includes the technologies in Option 5 plus in-process flow control and pollution prevention technologies, which allow for recovery and reuse of materials along with water conservation. The specific Option 6 technologies include:

- Countercurrent cascade rinsing for all flowing rinses;
- Centrifugation and recycling of painting water curtains; and
- Centrifugation and pasteurization to extend the life of water-soluble machining coolants.

EPA based the BPT, BCT, BAT, PSES, NSPS and PSNS effluent limitations guidelines and pretreatment standards on Option 6 for the Oily Wastes Subcategory.

Option 7

Option 7 is based on end-of-pipe ultrafiltration. Ultrafiltration is a process that allows water and small solute species to pass through a membrane under pressure while emulsified oils are retained by the membrane and recovered as concentrate (2). Ultrafiltration removes oil droplets ranging from 0.002 to 0.2-microns and is expected to generate a concentrated oil phase that is 2 to 5 percent of the influent volume. Sampling episode data determined that, on average, ultrafilters will remove greater than 99 percent of all oil and grease in the influent stream. Ultrafiltration is widely used throughout the MP&M industry and is well documented as effectively treating machining coolants, emulsified hydraulic oils, and organic pollutants present in oily MP&M wastewater.

Option 8

Option 8 includes the Option 7 technology (ultrafiltration) plus the pollution prevention and water conservation alternatives described in Option 6. Although EPA is not proposing Options 7 or 8, they were evaluated as potential options for the Oily Wastes, Shipbuilding Dry Dock, and Railroad Line Maintenance Subcategories.

9.2.3 Shipbuilding Dry Dock and Railroad Line Maintenance Subcategories

EPA evaluated four wastewater treatment technology options for the Shipbuilding Dry Docks and Railroad Line Maintenance Subcategories. For these subcategories, EPA considered Options 7 and 8 in addition to the two technology options discussed below.

Option 9

Option 9 is based on end-of-pipe chemical emulsion breaking followed by DAF to remove flocculated oils. Breaking the oil/water emulsions requires adding treatment chemicals such as acid, alum and/or polymers to change the emulsified material from a hydrophilic colloidal dispersion to aggregate hydrophobic particles. In the DAF tank, air bubbles created as a result of a rapid pressure drop attach to the aggregated oil particles and pull them to the surface of the tank. A scraping mechanism collects the oil and solids from the surface of the DAF tank. This treatment train is demonstrated in both the shipbuilding dry dock and railroad line maintenance subcategories and is effective for removing emulsified oils and suspended solids.

Option 10

Option 10 includes the end-of-pipe treatment technologies included in Option 9 (chemical emulsion breaking followed by DAF) plus in-process flow control and pollution prevention

technologies, which allow for recovery and reuse of materials along with water conservation. The specific Option 10 in-process technologies include:

- Countercurrent cascade rinsing for all flowing rinses;
- Centrifugation and recycling of painting water curtains; and
- Centrifugation and pasteurization to extend the life of water soluble machining coolants.

EPA based the BPT, BCT, BAT and NSPS effluent limitations guidelines and pretreatment standards for the Shipbuilding Dry Dock and Railroad Line Maintenance Subcategories on Option 10. EPA did not propose pretreatment standards for new or existing sources in the Shipbuilding Dry Dock and Railroad Line Maintenance Subcategories.

9.3 References

1. U.S. Environmental Protection Agency. Facility Pollution Prevention Guide. EPA/600/R-92/088, Washington, DC, 1992.

2. Freeman, H.M. Standard Handbook of Hazardous Waste Treatment and Disposal. McGraw Hill Publishing Company, New York, New York, 1989.

3. Cherry, K.F. Plating Waste Treatment. Ann Arbor Sciences Publishers, Inc., Ann Arbor, Michigan, 1982.

4. Freeman, H.M. Hazardous Waste Minimization. McGraw Hill Publishing Company, New York, New York, 1990.

5. Cushnie, George C. Pollution Prevention and Control Technology for Plating Operations. National Center for Manufacturing Sciences, 1994.

Table 9-1

EMH Tier 1 - MP&M Source Reduction and Pollution Prevention Technologies

Technology	Technology Description	Demonstration Status			Comments
		Number of Sites Visited[a]	Number of Survey Sites[c]	Estimated Number of MP&M Sites Using the Technology[c]	
Conductivity Probes	Measure the conductivity of water in a rinse tank to regulate the flow of fresh rinse water into the rinse system. A solenoid valve on the rinse system fresh water supply is connected to the controller, which opens the valve when a preset conductivity level is exceeded and closes the valve when conductivity is below that level.	38	29	320	This technology reduces the amount of water necessary for rinsing. The MP&M cost model evaluates the level of rinse flow control in place prior to estimating costs for countercurrent cascade rinsing.
Countercurrent Cascade Rinsing	Series of consecutive rinse tanks that are plumbed to cause water to flow from one tank to another in the direction opposite of the work flow. Water is introduced into the last tank of the series, making it the cleanest, and is discharged from the first tank, which has the highest concentration of pollutants.	94	130	1569	This technology reduces the amount of water necessary for rinsing. This technology is included in the technology options.
Drag-Out Rinsing	Stagnant rinse, initially of fresh water, positioned immediately after process tanks. The drag-out rinse collects most of the drag-out from the process tank, preventing it from entering the subsequent flowing rinses.	58	139	1737	This technology reduces the amount of water necessary for rinsing. The MP&M cost model evaluates the level of rinse water use prior to estimating costs for countercurrent rinsing.
Flow Restrictors	Prevent the flow in a pipe from exceeding a predetermined volume. Flow restrictors can be used to limit the flow into a rinse system. For continuously flowing rinses, a flow restrictor controls the flow into the system, ensuring a consistent, optimum flow rate.	45	127	1581	This technology reduces the amount of water necessary for rinsing. The MP&M cost model evaluates the level of rinse flow control in place prior to estimating costs for countercurrent cascade rinsing.

Table 9-1 (Continued)

		Demonstration Status			
Technology	**Technology Description**	**Number of Sites Visited[a]**	**Number of Survey Sites[c]**	**Estimated Number of MP&M Sites Using the Technology[c]**	**Comments**
Spray Rinsing	Spray water on parts above a process tank or drip/drag-out tank; Uses considerably less water than immersion for certain part configurations. This technology can also be performed as countercurrent cascade rinsing with spray rinses instead of overflow immersion rinses.	64	187	1767	Not applicable at all sites because of part and process configurations; not included in the technology options.
Centrifugation of Painting Water Curtains	Removes the heavier solids from the water curtain allowing the water to be reused. The solids are collected as a cake in the basket of the centrifuge. This technology can achieve closed-loop reuse of water curtains.	3	1	12	Requires little maintenance, and has been demonstrated to achieve complete recycle with periodic removal of sludge. This technology is included in the technology options.
Filtration of Painting Water Curtains	Removes solids by filtration (cloth, sand, diatomaceous earth, etc.) followed by reuse. This technology can achieve closed-loop reuse of water curtains.	2	3	20	Generates more waste than centrifugation due to filter medium disposal or sand filter backwash. This technology is not included in the technology options.
Settling of Painting Water Curtains	Removes the heavier solids from the water curtains. This technology can be used in conjunction with other removal technologies to lessen the solids loading.	5	5	23	Equivalent technology (centrifugation) is included as part of the technology options; therefore, this technology is not included in the technology options.
Biocide Addition to Lengthen Coolant Life	Can impede the growth of microorganisms that cause rancidity. Machining coolant is often discarded as it becomes rancid.	9	27	216	Equivalent technology (pasteurization) is included as part of the technology options; therefore, this technology is not included in the technology options.

Table 9-1 (Continued)

Technology	Technology Description	Demonstration Status			Comments
		Number of Sites Visited[a]	Number of Survey Sites[c]	Estimated Number of MP&M Sites Using the Technology[c]	
Centrifugation to Lengthen Coolant Life	Removes the solids from the coolant to extend its usable life. Some high-speed centrifuges can also perform liquid-liquid separation to remove tramp oils and further extend coolant life.	18	10	78	This is a component of the coolant recycling system included in the technology options.
Filtration to Lengthen Coolant Life	Removes the solids from the coolant using filters such as cloth, sand, carbon, etc.	18	18	142	Equivalent technology is included as part of the technology options; therefore, this technology is not included in the technology options.
Skimming of Tramp Oils to Lengthen Coolant Life	Extends the coolant life. Tramp oil buildup often makes machining coolant unusable.	8	9	82	Equivalent technology (liquid-liquid centrifugation) is included as part of the technology options; therefore, this technology is not included in the technology options.
Pasteurization to Lengthen Coolant Life	Kills the microorganisms that cause rancidity. Machining coolant is often discarded as it becomes rancid.	1	2	18	This is a component of the coolant recycling system included in the technology options.

EMH - Environmental Management Hierarchy.
NA - Numerical data are not available.
Source: MP&M site visits, MP&M sampling episodes, MP&M surveys and technical literature.
[a]Indicates the number of MP&M sites visited by EPA using the listed technology. EPA visited a total of 162 sites.
[b]Number of survey sites based on data collected in 1996 only. The 1989 survey did not request this information.
[c]Indicates the estimated number of MP&M sites currently performing this technology based on the 1996 Detailed Survey Results. EPA estimates that the MP&M industry includes 63,000 wastewater discharging sites. EPA estimated numbers in this column using statistical weighting factors for the 1996 MP&M Detailed survey respondents.

Table 9-2

EMH Tier 2 - MP&M Recycling Technologies

Technology	Technology Description	Demonstration Status			Comments
		Number of Sites Visited[a]	Number of Survey Sites[b]	Estimated Number of MP&M Sites Using the Technology[c]	
Evaporation with Condensate Recovery	Leaves a concentrated residue for disposal and condenses the water vapor for reuse.	4	15	147	Energy-intensive. This technology is not included in the technology options.
Ion Exchange	Combined cation and anion exchange used to remove metal salts from electroplating rinsewater. Effluent from the ion exchange is returned to the electroplating rinse system. Ion exchange regenerants are either discharged to the end-of-pipe chemical precipitation unit for metals removal, or metals are recovered by electrowining.	29	33	437	Permeate contains moderate dissolved solids concentrations and may be reused in noncritical unit operations. This technology is not included in the technology options. While the technology may be effective for individual sites EPA cost estimates show that ion exchange is not cost effective for the industry as a whole.
Reverse Osmosis	Forces wastewater through a membrane at high pressure, leaving a concentrated stream of pollutants for disposal. Reverse osmosis may provide an effluent clean enough for reuse.	2	1	3	Similar in application to end-of-pipe ion exchange, but not as well demonstrated. This technology is not included in the technology options.

Table 9-2 (Continued)

Technology	Technology Description	Demonstration Status			Comments
		Number of Sites Visited[a]	Number of Survey Sites[b]	Estimated Number of MP&M Sites Using the Technology[c]	
Electrolytic Recovery (Electrowinning)	Recovers dissolved metals from concentrated sources. For rinses, electrolytic recovery is typically restricted to drag-out rinses. Flowing rinses are generally too dilute for efficient electrolytic recovery. This technology is effective on the concentrated regenerant from ion exchange.	19	23	142	Works in conjunction with drag-out rinsing and in-process ion exchange to recover metals from wastewater. This technology is not included in the technology options.

EMH - Environmental Management Hierarchy.
NA - Numerical data are not available.
Source: MP&M site visits, MP&M sampling episodes, MP&M surveys and technical literature.
[a]Indicates the number of MP&M sites visited by EPA using the listed technology. EPA visited a total of 162 sites.
[b]Number of survey sites based on data collected in 1996 only. The 1989 survey did not request this information.
[c]Indicates the estimated number of MP&M sites currently performing this technology based on the 1996 Detailed Survey Results. EPA estimates that the MP&M industry includes 63,000 wastewater discharging sites. EPA estimated numbers in this column using statistical weighting factors for the 1996 MP&M Detailed survey respondents.

Table 9-3

EMH Tiers 3 and 4 - MP&M End-of-Pipe Treatment and Disposal Technologies

		Demonstration Status			
Technology	**Technology Description**	**Number of Sites Visited[a]**	**Number of Survey Sites[b]**	**Estimated Number of MP&M Sites Using the Technology[c]**	**Comments**
Chemical Emulsion Breaking Followed by Gravity Oil/Water Separation	Adds acids (typically sulfuric), polymer, and sometimes alum to oil-bearing wastewater to break oil/water emulsions for subsequent gravity separation.	11	56	958	This technology is included in the technology options.
Chemical Reduction of Hexavalent Chromium	Reduces hexavalent chromium to trivalent chromium using a reducing agent such as sulfur dioxide, sodium bisulfite, or sodium metabisulfite.	74	103	1,839	This technology is included in the technology options.
Cyanide Destruction Through Alkaline Chlorination	Destroys cyanide by adding chlorine (usually sodium hypochlorite or chlorine gas) to first oxidize cyanide to cyanate, then cyanate to carbon dioxide and nitrogen gas.	52	53	1,136	This technology is included in the technology options.
Chemical Emulsion Breaking Followed by DAF	Adds acids (typically sulfuric), polymer, and sometimes alum to oil-bearing wastewater to break oil/water emulsions for subsequent gravity separation. Removes oils and solids by bubbling gas through the wastewater, bringing solids to the surface for subsequent removal.	12	25	244	This technology is included and has been costed in the technology options for shipbuilding dry docks and railroad line maintenance subcategories.
Oil Skimming of Oily Wastewater Streams	Removes free floating oil by gravity separation and mechanical skimming. This technology does not remove emulsified oils.	38	89	2,087	Not as effective as chemical emulsion breaking followed by gravity flotation using an oil/water separator or DAF. This technology is not included in the technology options.
Cyanide Oxidation by Ozone	Ozone oxidizes cyanide to ammonia, carbon dioxide and oxygen.	0	1	4	The generation of ozone requires expensive equipment and safety controls. An equivalent technology (cyanide destruction through alkaline chlorination) is included in the technology options. Therefore, this technology is not included in the technology options.

Table 9-3 (Continued)

Technology	Technology Description	Demonstration Status			Comments
		Number of Sites Visited[a]	Number of Survey Sites[b]	Estimated Number of MP&M Sites Using the Technology[c]	
Chelation Breaking/ Precipitation to Remove Complexed Metals	Wastewater from electroless plating and some cleaning operations contains chelated metals which cannot be removed by chemical precipitation. Strong reducing agents such as dithiocarbamate are added to break the metal-organic chelate bond and precipitate the metal.	11	49	555	Used to treat electroless plating wastewater prior to chemical precipitation. This technology is included and costed in the technology options.
Ultrafiltration	Generally used to remove emulsified or free-floating oils. This technology also removes other solids. Uses a membrane of very small pore size.	17	23	351	This technology is included in the technology options for new sources.
Activated Carbon Adsorption	Removes dissolved organic pollutants by filtration through activated carbon. The dissolved organics are removed by the process of adsorption. This technology requires preliminary treatment to remove suspended solids and oil and grease.	8	21	165	Applicable to wastewater containing dilute concentrations of nonpolar organic pollutants. MP&M treatment influent streams typically do not contain dilute concentrations of nonpolar organic pollutants. This technology is not included in the technology options.
Aerobic Biological Treatment	Biochemically decomposes organic materials in the presence of oxygen. The decomposition is performed by microorganisms.	1	4	130	Applicable to wastewater with high concentrations of organic pollutants. MP&M treatment influent streams typically do not contain high concentrations of organic pollutants. EPA visited one site that operated this technology to treat nonprocess wastewater. This technology is not included in the technology options.
Air Stripping	Removes dissolved volatile organic pollutants by contacting the organics in the wastewater with a continuous stream of air bubbles. Volatile organic pollutants are transferred from the wastewater to the air.	0	2	14	Applicable to wastewater containing high concentrations of volatile organic pollutants. MP&M treatment influent streams typically do not contain high concentrations of volatile organic pollutants. This technology is not included in the technology options.

Table 9-3 (Continued)

Technology	Technology Description	Demonstration Status			Comments
		Number of Sites Visited[a]	Number of Survey Sites[b]	Estimated Number of MP&M Sites Using the Technology[c]	
Neutralization	Acidic or alkaline chemicals used to neutralize high or low pH wastewater to within an acceptable range. Common acids include sulfuric and hydrochloric. Common alkaline chemicals include lime (calcium hydroxide) and sodium hydroxide.	51	233	3,713	Adjusts pH, but does not remove suspended solids and dissolved metals. This technology is not included in the technology options.
Chemical Precipitation and Gravity Sedimentation	Removes metals by precipitating insoluble compounds such as hydroxides, sulfides, or carbonates. Precipitation as metal hydroxides using lime (calcium hydroxide) or sodium hydroxide is the most common. Precipitated and flocculated solids are removed by gravity sedimentation in a clarifier.	117	203	2,981	This technology is included and costed in the technology options.
Chemical Precipitation and Membrane Filtration	Removes metals by precipitating insoluble compounds such as hydroxides, sulfides, or carbonates. Precipitation as metal hydroxides using lime (calcium hydroxide) or sodium hydroxide is the most common. Precipitated and flocculated solids are removed by microfiltration through a porous membrane.	5	5	36	This technology is included and costed in the new source technology options.
Atmospheric Evaporation	Includes both natural solar evaporation and forced atmospheric evaporation by which the evaporation rate is accelerated by increased temperature, air flow, and surface area.	3	12	142	Usually occurs in ponds or lagoons with large space requirements. Also, atmospheric evaporators have significant energy requirements as well as possible cross-media impacts. This technology is not included in the technology options.
Ion Exchange	Polishing technique after metals precipitation to scavenge low concentrations of residual metals (cations). Anions remain in solution and are discharged. Concentrated metal containing regenerants are typically returned to the metals precipitation system.	13	39	251	Usually used in conjunction with another end-of-pipe technology (e.g., following chemical precipitation). Based on analytical data collected during the MP&M sampling program, this technology does not provide significant metal removals beyond chemical precipitation and sedimentation. This technology is not included in the technology options.

Table 9-3 (Continued)

Technology	Technology Description	Demonstration Status			Comments
		Number of Sites Visited[a]	Number of Survey Sites[b]	Estimated Number of MP&M Sites Using the Technology[c]	
Multimedia Filtration	Uses filter media of different grain size to remove solids from wastewater. Larger particles are removed by the coarser media and the smaller particles are removed by the finer media. Media include garnet, sand, and anthracite coal. The filter is periodically backwashed to remove solids.	11	16	354	Usually used in conjunction with another end-of-pipe technology (e.g., following chemical precipitation). Based on analytical data collected during the MP&M sampling program, this technology does not provide significant additional metal removals beyond chemical precipitation and sedimentation. EPA evaluated this technology in the BCT technology options.
Sand Filtration	Uses a sand filter to remove solids from wastewater. The filter is periodically backwashed to remove solids.	37	41	830	Usually used in conjunction with another end-of-pipe technology (e.g., following chemical precipitation). Based on analytical data collected during the MP&M sampling program, this technology does not provide significant metal removals beyond chemical precipitation and sedimentation. This technology was not included in the technology options.
Gravity Settling	Physically removes suspended particles by gravity. This process does not include the addition of any chemicals.	7	46	1,679	Only settles suspended solids and does not remove dissolved metals. This technology is not included in the technology options.
Centrifugation of Sludge	Uses centrifugal force to separate water from solids. Centrifugation dewaters sludges, reducing the volume and creating a semisolid cake. Centrifugation of sludge can typically achieve a sludge of 20-35% solids.	4	9	127	Energy intensive, and is therefore not included in the technology options. Equivalent sludge dewatering technologies (gravity thickening and pressure filtration) are included and costed in the technology options.

Table 9-3 (Continued)

Technology	Technology Description	Demonstration Status			Comments
		Number of Sites Visited[a]	Number of Survey Sites[b]	Estimated Number of MP&M Sites Using the Technology[c]	
Gravity Thickening of Sludge	Physically separates solids and water by gravity. Water separates from the sludge and is decanted from the top of the mixture. Gravity thickening can typically thicken sludge to 5% solids.	60	85	1,161	This technology is included and costed in the technology options.
Pressure Filtration of Sludge	Physically separates solids and water by pressure filtration. Most commonly performed in a plate-and-frame filter press where the sludge builds up between the filter plates and water is filtered through a cloth. Pressure filtration can produce a sludge cake with greater than 40% solids.	113	189	3,106	This technology is included in the technology options.
Sludge Drying	Dries sludge by heating, which causes the water in the sludge to evaporate.	22	48	835	This technology is energy intensive, and is therefore not included in the technology options. Equivalent technologies (gravity thickening and pressure filtration) are included in the technology options.
Vacuum Filtration of Sludge	The MP&M cost model evaluates the level of rinse flow control in place prior to estimating costs for countercurrent cascade rinsing.	8	9	193	Energy intensive and typically does not achieve as high a percent solids as pressure filtration. This technology is not included in the technology options. Equivalent sludge dewatering technologies (gravity thickening and pressure filtration) are included in the technology options.

EMH - Environmental Management Hierarchy.
NA - Numerical data are not available.
Source: MP&M site visits, MP&M sampling episodes, MP&M surveys and technical literature.
[a]Indicates the number of MP&M sites visited by EPA using the listed technology. EPA visited a total of 162 sites.
[b]Indicates the number of model sites that reported using this technology. Based on 691 MP&M survey respondents.
[c]Indicates the estimated number of MP&M sites currently performing this technology. EPA estimates that the MP&M industry includes 63,000 wastewater discharging sites. EPA estimated numbers in this column using statistical weighting factors for the MP&M survey respondents.

Table 9-4

Technology Options by Subcategory

	General Metals, Metal Finishing Job Shops, Printed Wiring Boards, Steel Forming and Finishing, and Non-Chromium Anodizing Subcategories				Oily Waste Subcategory				Shipbuilding Dry Dock and Railroad Line Maintenance Subcategories	
Treatment or Source Reduction Technology	**Option 1**	**Option 2**	**Option 3**	**Option 4**	**Option 5**	**Option 6**	**Option 7[a]**	**Option 8[a]**	**Option 9**	**Option 10**
Chemical Precipitation	T	T	T	T						
Gravity Clarification for Metal Hydroxide Removal	T	T								
Microfiltration for Metal Hydroxide Removal			T	T						
Emulsion Breaking and Gravity Separation for Oil Removal	T	T			T	T				
Ultrafiltration for Oil Removal			T	T			T	T		
Emulsion Breaking and DAF for Oil Removal									T	T
Alkaline Chlorination for Cyanide Removal	T	T	T	T						
Hexavalent Chromium Reduction	T	T	T	T						
Reduction/Precipitation of Chelated Metals	T	T	T	T						
Contract Hauling of Organic Solvent-Bearing Wastewater	T	T	T	T	T	T	T	T	T	T
Countercurrent Cascade Rinsing		T		T		T		T		T
Centrifugation and Recycling of Painting Water Curtains		T		T		T		T		T
Centrifugation and Pasteurization to Extend Life of Water Soluble Machining Coolants		T		T		T		T		T

DAF: Dissolved air flotation
[a]EPA evaluated this option for Shipbuilding Dry Dock and Railroad Line Maintenance Subcategories along with Options 9 and 10.

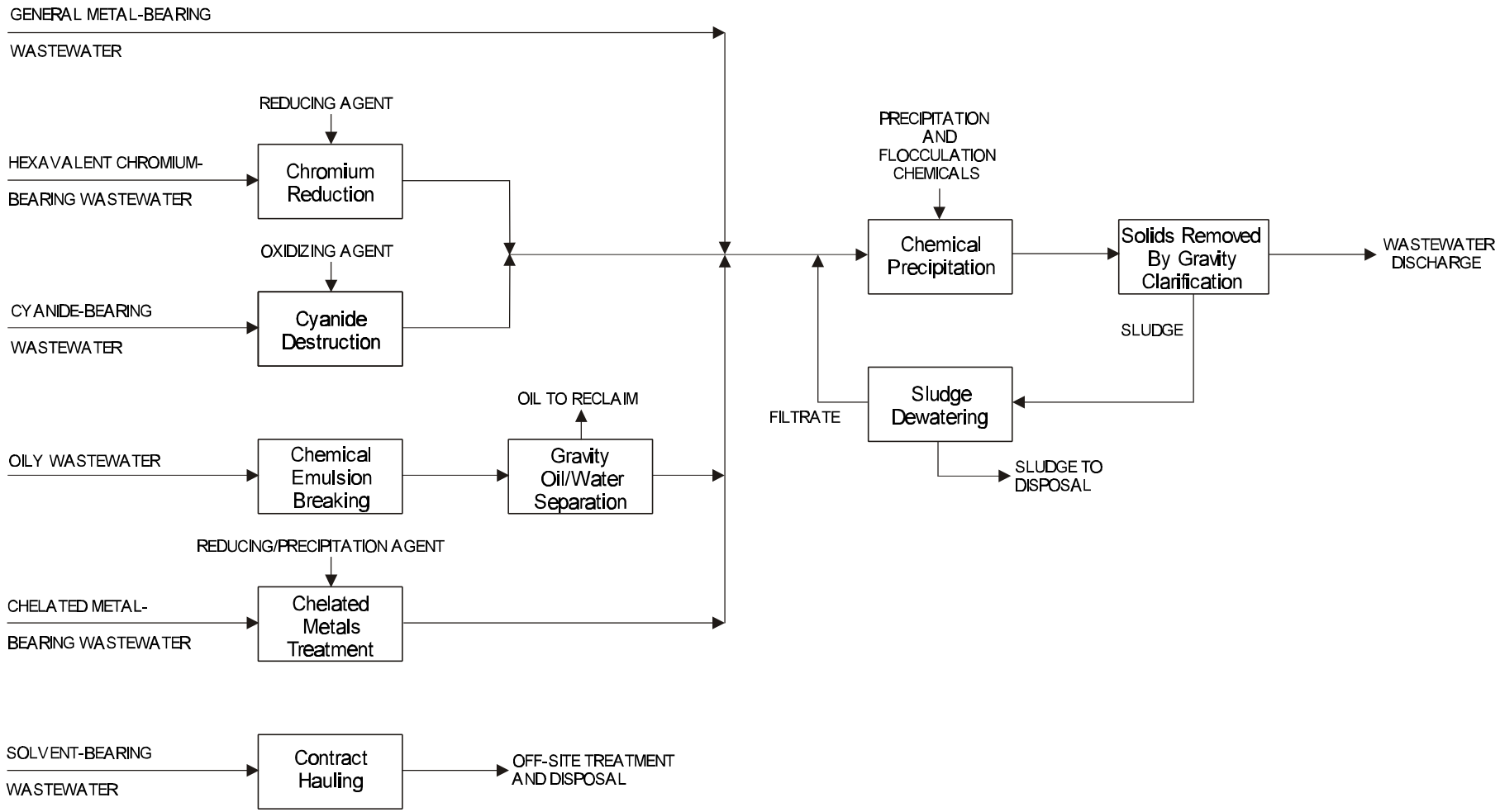

Figure 9-1. End-of-Pipe Treatment Train for Options 1 and 2 Considered for the Following Subcategories: General Metals, Metal Finishing Job Shops, Non-Chromium Anodizing, Printed Wiring Boards, and Steel Forming and Finishing

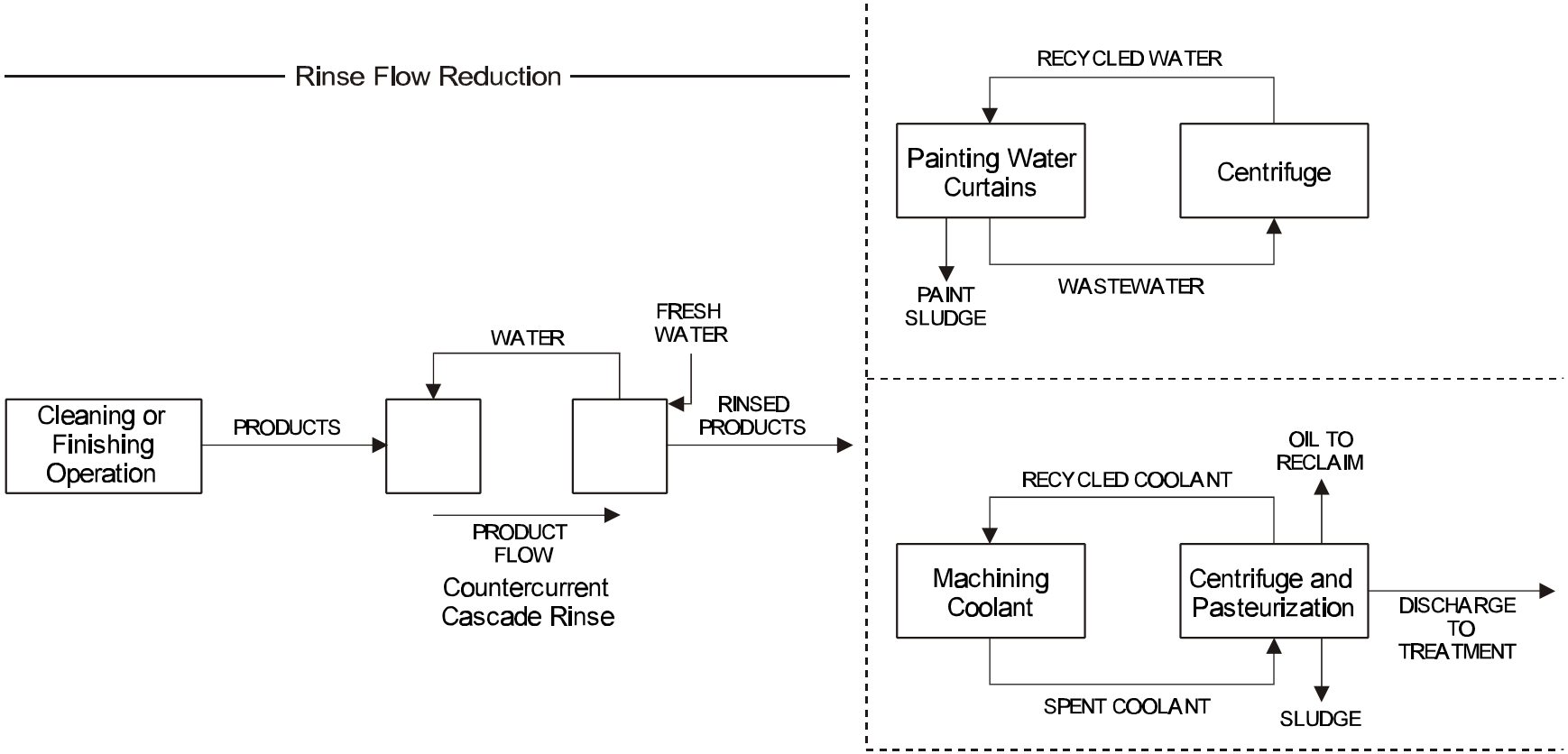

Figure 9-2. In-Process Water Use Reduction Technologies for Options 2 and 4 Considered for the Following Subcategories: General Metals, Metal Finishing Job Shops, Non-Chromium Anodizing, Printed Wiring Boards, and Steel Forming and Finishing

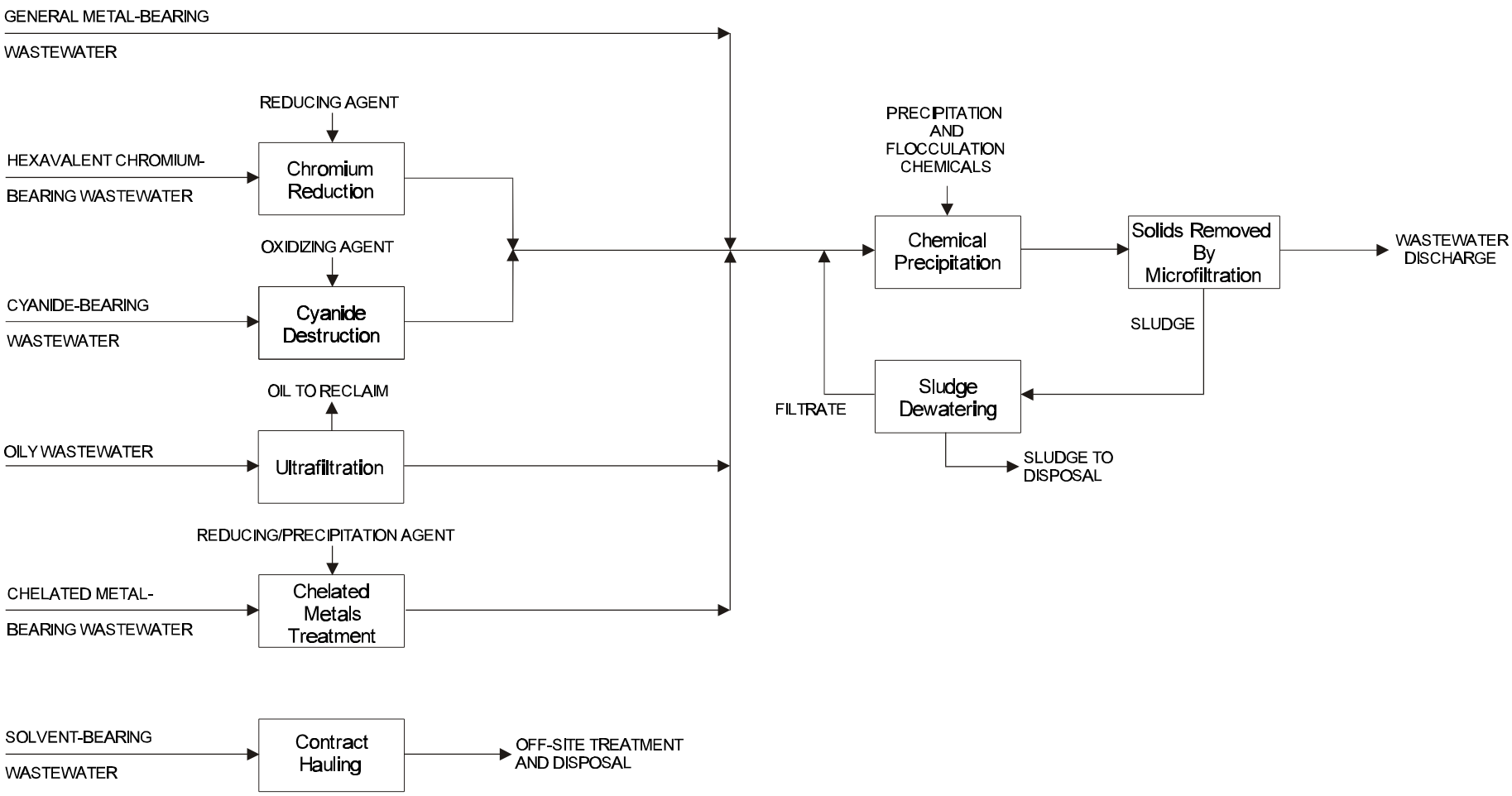

Figure 9-3. End-of-Pipe Treatment Train for Options 3 and 4 Considered for the Following Subcategories: General Metals, Metal Finishing Job Shops, Non-Chromium Anodizing, Printed Wiring Boards, and Steel Forming and Finishing

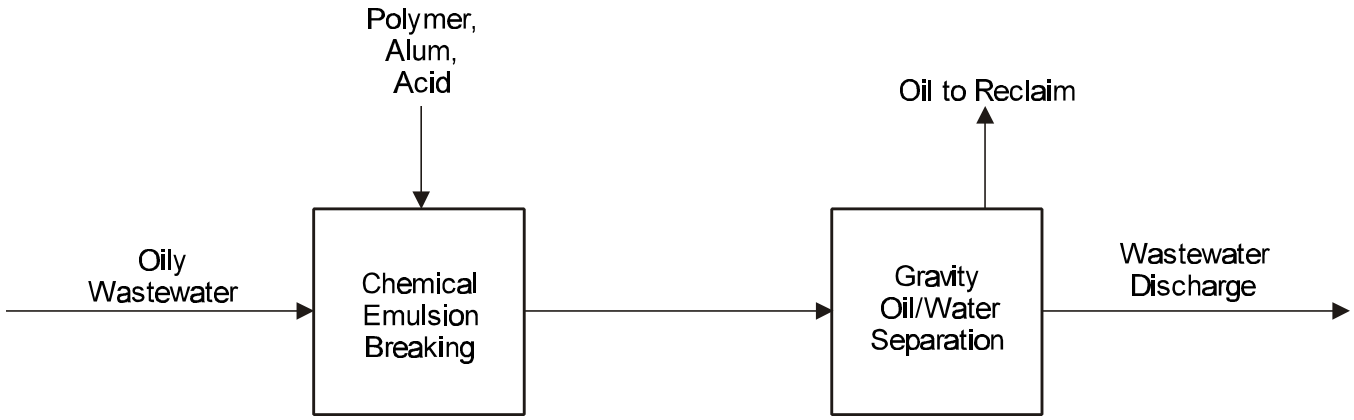

Figure 9-4. End-of-Pipe Treatment Train for Options 5 and 6 Considered for the Oily Wastes Subcategory

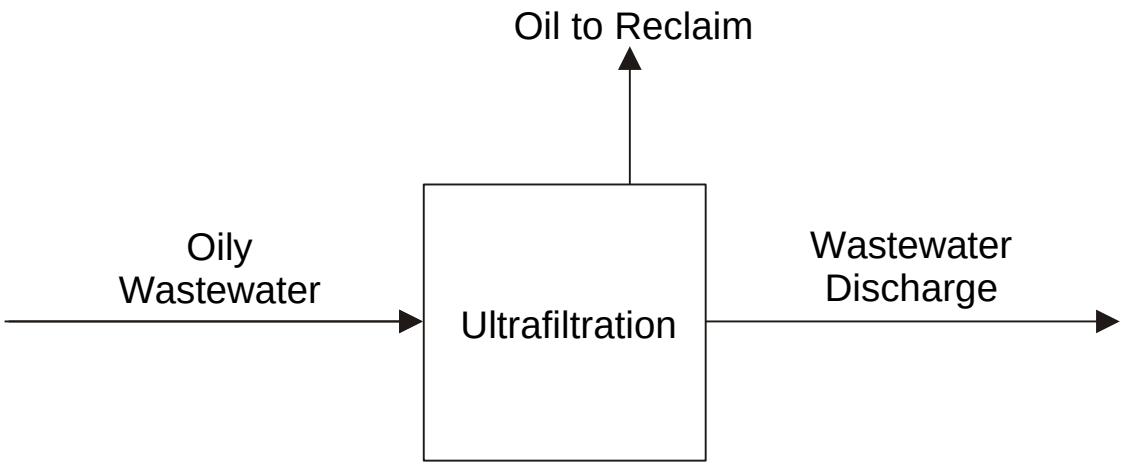

Figure 9-5. End-of-Pipe Treatment Train for Option 7 and 8 Considered for the Following Subcategories: Oily Wastes, Railroad Line Maintenance, Shipbuilding Dry Dock

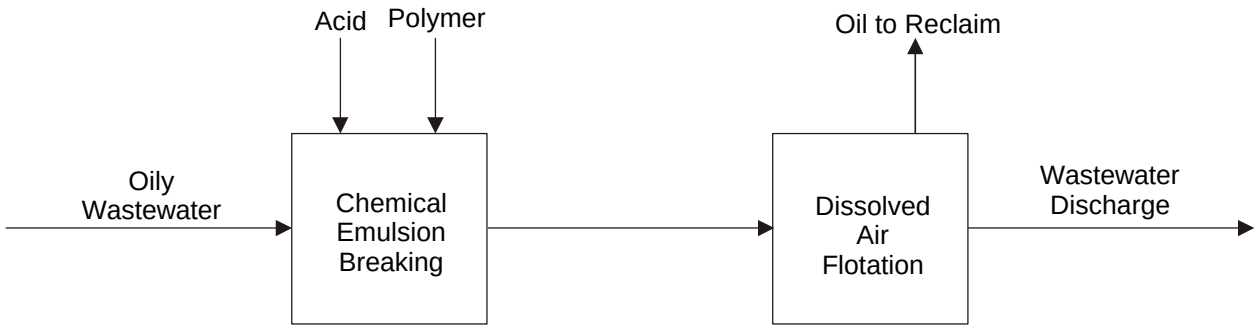

Figure 9-6. End-of-Pipe Treatment Train for Options 9 and 10 Considered for the Railroad Line Maintenance and Shipbuilding Dry Dock Subcategories

10.0 LONG-TERM AVERAGES AND VARIABILITY FACTORS

This section summarizes the technology effectiveness evaluation and the long-term average (LTA) concentrations and variability factors calculated for the selected end-of-pipe MP&M wastewater treatment technologies. These technologies are:

- Chemical precipitation and clarification (using sedimentation or membrane filtration) with preliminary treatment, where applicable, for treatment of regulated metals and suspended solids. Preliminary treatment may include chromium reduction, batch chemical precipitation for concentrated waste streams, and chemical reduction/precipitation of chelated metals.

- Ultrafiltration for treatment of oil and grease and organic pollutants.

- Dissolved air flotation (DAF) for treatment of oil and grease and organic pollutants.

- Chemical emulsion breaking and oil-water separation for treatment of oil and grease and organic pollutants.

- Cyanide destruction with alkaline chlorination for treatment of cyanide.

Section 8.3 describes these technologies in detail, as well as the physical and chemical principles underlying their operation. Section 3.3 describes EPA's data-gathering activities at MP&M sites that use each of these technologies.

This section describes the data sources used in the technology effectiveness evaluation (Section 10.1); the data-editing procedures used in assessing the technologies (Section 10.2); and the LTA concentrations, variability factors, and limitations calculated from this assessment (Sections 10.3 and 10.4).

EPA used the following methodology to estimate the daily maximum and monthly average limitations for the regulated pollutants:

1. Identify the sampling episodes that match the technology option (Section 10.1).

2. Evaluate the data from each episode to identify data that demonstrate effective treatment (Section 10.2).

3. Calculate the LTA for each sampling episode data set from the daily effluent concentrations for each pollutant passing the technology effectiveness evaluation. The episode-level LTA for each pollutant is the arithmetic average of the daily concentration at each sampling episode. For samples where a pollutant was not detected, EPA used the sample detection limit to calculate the LTA. The Agency defined the LTA for each pollutant as the median of the episode-level LTAs (Section 10.3.4).

4. Use the modified delta-lognormal model to estimate episode-level daily and episode-level 4-day average variability factors (Section 10.3.1) for those episode data sets that had at least four samples of a pollutant passing the technology effectiveness evaluation, including at least two detected values.

5. Determine the daily variability factor and the 4-day average variability factor. EPA defines the daily variability factor for a pollutant as the average of the episode-level daily variability factors and defines the 4-day average variability factor as the average of the episode-level 4-day average variability factors (Section 10.3.5).

6. Calculate the daily and monthly average limitations by multiplying the constituent LTA by the daily and 4-day constituent variability factors, respectively (Section 10.3.7).

10.1 Sources of Technology Performance Data

EPA, industry, and local sanitation districts collected data from wastewater treatment systems during separate sampling episode programs conducted at MP&M facilities. Sampling episode reports maintained in the administrative record for this rulemaking present the data collected during each sampling episode. All sampling episodes were conducted using the EPA sampling and chemical analysis protocols as described in Section 3.3. The following subsections describe sampling programs conducted by EPA and other entities as well as industry-supplied monitoring data.

To determine the limits for each subcategory for each technology option, EPA subdivided the data by subcategory and technology option. Section 7.0 discusses regulated pollutants for MP&M subcategories. Table 10-1 lists the number of evaluated treatment systems per subcategory.

10.1.1 EPA Sampling Program

EPA conducted 57 sampling episodes at MP&M sites ranging from one to five days as discussed in Section 3.3. To assess possible influent and effluent variability caused by variations in site operations, EPA conducted multiple sampling episodes at three of these sites. Data from these sampling episodes are stored in the LTA Database. Table 10-2 summarizes the number of sampling episodes and data points in the LTA Database from EPA-conducted sampling episodes.

For some sampling points on some days, EPA collected duplicate samples for quality assurance checks, or multiple sample fractions to develop manual composite samples. EPA averaged the concentrations as described below for evaluating treatment performance and calculating long-term averages and variability factors.

- *Duplicate samples.* As discussed in Section 4.0, EPA collected duplicate samples at many sampling points as a quality control measure. EPA averaged the concentrations for the original and duplicate samples for each parameter. For samples where a pollutant was not detected in a sample, EPA used the sample detection limit to calculate the average.

- *Multiple composite fractions.* EPA collected multiple grab composite samples for oil and grease and total petroleum hydrocarbons. For these samples, EPA averaged the composite results over the sample day. When a pollutant was not detected in a sample, EPA used the sample detection limit to calculate the average.

10.1.2 Sampling Episodes Conducted by Industry and Local Sanitation Districts

Local sanitation districts and the industry conducted sampling episodes ranging from three to five days as discussed in Section 3.3. To assess possible influent and effluent variability caused by variations in site operations, sanitation districts conducted multiple sampling episodes at two sites, one of which EPA also sampled. Data from these sampling episodes are stored in the LTA Database. Table 10-3 summarizes the number of sampling episodes and data points in the LTA Database associated with samples collected by industry and local sanitation districts.

10.1.3 Industry-Supplied Effluent Monitoring Data

To augment data collected during sampling episodes, EPA requested effluent monitoring data from sampled sites to further evaluate and refine variability factors. EPA attempted to obtain effluent monitoring data that represented each regulated subcategory and each technology option and used industry effluent data that met the following criteria:

- Data were from a treatment system passing all criteria in the technology-effectiveness evaluation (see Section 10.2).

- The site collected effluent monitoring data from a location comparable to the one used by EPA during the sampling episode (e.g., the site did not typically commingle the effluent with other waste streams, such as storm water or sanitary waste, before the sampling point). As an exception, EPA used a site's data even when the monitoring location followed pH adjustment, since this treatment step would not change the concentrations of regulated pollutants.

- Wastewater treatment processes were comparable to those at the time of the sampling episode (i.e., no changes were made to the system that could change treatment effectiveness). If the wastewater treatment process had

been modified, EPA requested data for a period when the treatment processes were similar to those at the time of the sampling episode.

- Wastewater treatment influent characteristics were comparable to those at the time of the sampling episode (i.e., the site made no major manufacturing process changes that would change the influent characteristics). If changes had occurred subsequent to the sampling episode, EPA requested data for a period when processes were similar to those during the sampling episode.

EPA collected data during site visits and sampling episodes, from voluntary submissions by sites, or by written request. The database contained additional effluent data from 14 sites. Table 10-4 summarizes supplementary effluent monitoring data obtained from sites. Because these data are not in a form that allows direct use for calculating limits or for comparison to the proposed limits, EPA was not able to use these data in setting or evaluating the compliance aspects of the proposed limits and standards. However, following proposal, EPA will reformat and evaluate these long-term effluent monitoring data in relation to the proposed limits.

10.2 Evaluation of Treatment Effectiveness

EPA reviewed MP&M sampling data to identify data from well-designed and well-operated treatment systems to calculate the LTA concentrations and variability factors. During the review, EPA focused on data for pollutants processed and treated by the MP&M industry. Figure 10-1 summarizes the technology effectiveness data-editing procedures discussed in this section. As shown on this figure, the data editing process consisted of four major steps:

1. Identification of pollutants not present in the raw wastewater at sufficient concentrations to evaluate treatment effectiveness;
2. Assessment of general performance of the treatment system;
3. Identification of process upsets that could affect treatment effectiveness and sampling techniques that could affect data quality; and
4. Identification of wastewater treatment chemicals.

EPA did not calculate LTAs for pollutants that were not MP&M pollutants of concern (see Section 7.0). The LTA database contains 59,211 influent and effluent data points for MP&M pollutants of concern associated with the MP&M end-of-pipe technology options. Of these data points, 29,639 were influent data points. A data point is a concentration of a specific constituent from a given sampling day at a sampled point.

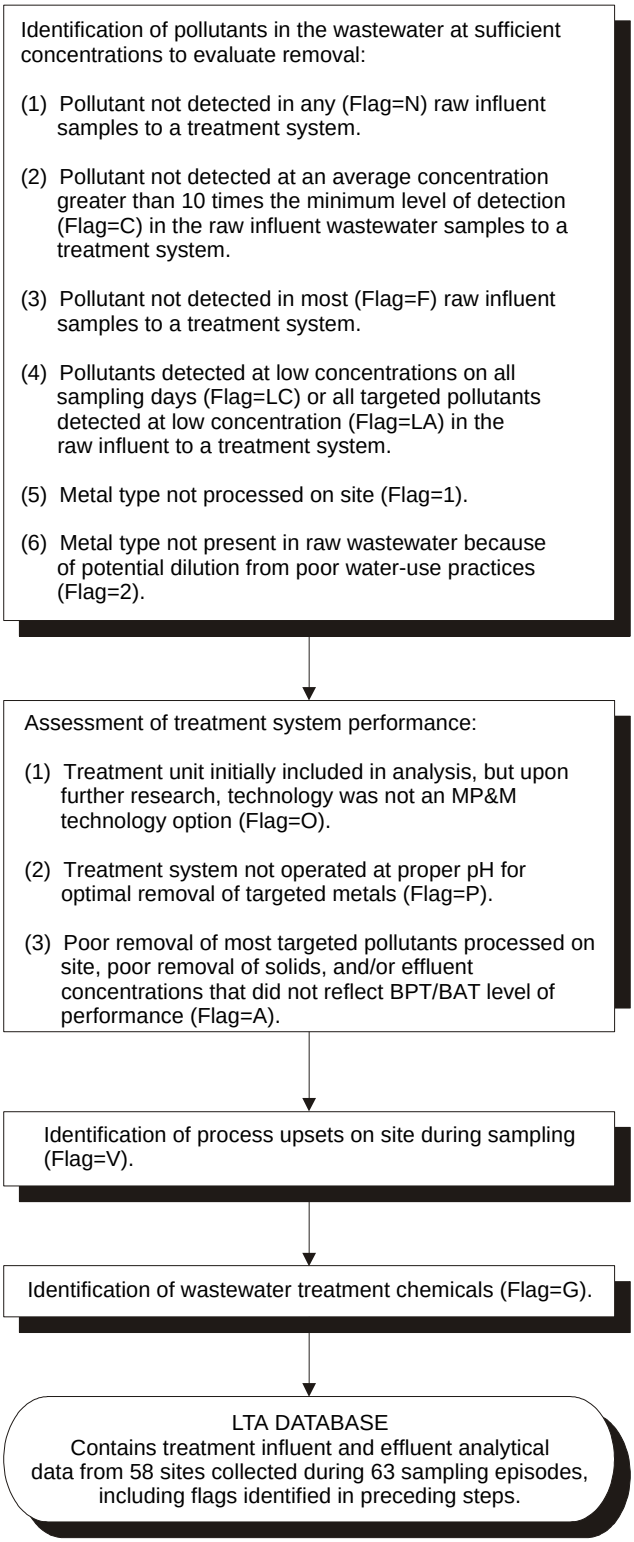

Figure 10-1. Summary of Technology Performance Data-Editing Procedures

EPA flagged each data point failing an evaluation criterion and only included unflagged effluent data points in the LTA and variability factor calculations. One pollutant at a sampling point could have multiple flags, depending on the number of evaluation criteria it did not meet. Where EPA conducted multiple episodes at one site, the Agency evaluated each episode separately; therefore, EPA may have flagged a pollutant for a different reason for each episode. Sections 10.2.1 through 10.2.4 describe the flags used in editing the database. Table 10-5 lists the number of effluent data points flagged for each technology option. The number of flagged data points listed in this table reported only the initial flag for a pollutant. For example, as shown in Table 10-5, EPA flagged 2,061 data points with a "N" flag. Of the remaining unflagged points, the Agency flagged 453 with a "C" flag, then of the remaining unflagged data, it flagged 10 with an F (see Figure 10-1 for a description of each flag).

Table 10-6A presents data from sampled facilities from all applicable subcategories for total and amenable cyanide. Tables 10-6B through 10-6J present, for each pollutant proposed for regulation and each subcategory, the daily effluent concentration for all other data points that passed the data editing criteria. The Steel Forming and Finishing Subcategory's mass-based limits are based on the General Metals Subcategory concentration limits; therefore, data for both subcategories are presented together on Table 10-6B through 10-6J. Tables 10-6B only list data from sampled facilities within each subcategory. In developing the proposed effluent limitations and standards, EPA, in certain cases, transferred LTAs and variability factors from other subcategories (see Tables 10-8B through 10-8K).

10.2.1 Identification of Pollutants Not Present in the Raw Wastewater at Sufficient Concentrations to Evaluate Treatment Effectiveness

EPA evaluated the concentrations of pollutants of concern in the influent to each treatment system to determine which pollutants were present at concentrations high enough to assess the treatment effectiveness of the system. EPA flagged the influent and corresponding effluent data points for all specific pollutants in a treatment system that met the following criteria:

1. EPA assigned a flag of "N" to a pollutant if EPA did not detect the pollutant in any of the raw influent wastewater samples to a treatment system during a sampling episode.

2. EPA assigned a flag of "C" to a pollutant if EPA did not detect the pollutant in the raw influent wastewater to a treatment system at an average concentration of greater than 10 times the minimum level of detection during the sampling episode. The minimum level is the lowest concentration that can be reliably measured by an analytical method. EPA calculated the average influent concentration using the sample detection limit when the pollutant was not detected in the influent.

3. EPA assigned a flag of "F" to a pollutant if EPA detected the pollutant in the raw influent to a treatment system at an average concentration greater than 10 times the minimum level (see Step 2), but the Agency did not detect the pollutant on most sampling days, and, when detected, EPA detected it at a low concentration. EPA assigned this flag on a case-by-case basis for each pollutant.

4. EPA assigned a flag of "LC" to a pollutant if EPA detected the pollutant in the influent to a treatment system at an average concentration greater than 10 times the minimum level (see Step 2) but EPA did not detect the pollutant on all sampling days at concentrations high enough to assess treatment effectiveness. EPA assigned this flag on a case-by-case basis for each pollutant.

5. EPA assigned a flag of "LA" on a case-by-case basis to all pollutants associated with a treatment system if the concentrations of all the targeted pollutants detected in the raw influent were not detected at high enough concentrations to assess treatment effectiveness. EPA assigned this flag to all effluent points associated with three episode-specific treatment units: one ultrafiltration unit, one DAF unit, and one chemical precipitation with microfiltration for clarification.

6. If a sampled site did not process a raw material associated with a pollutant (e.g., cadmium or cyanide) then EPA assigned all unflagged data points for that pollutant a flag of "1." EPA assigned this flag to specific pollutants at effluent points associated with 14 chemical precipitation systems.

7. Because the proposed MP&M effluent limitations guidelines and standards include water conservation practices and pollution prevention technologies, EPA reviewed information obtained from sampled sites to identify unit operations for which sites did not have water conservation and pollution prevention technologies in place. EPA assigned a flag of "2" to pollutants affected by poor water-use practices. If the poor water-use practices only affected a specific pollutant (for example, a cadmium electroplating line that did not have water conservation practices in place), EPA assigned this flag only to the affected pollutant.

   EPA assigned this flag to specific metals in the effluent data for seven chemical precipitation systems and cyanide effluent data for one cyanide destruction system. EPA also assigned this flag to all effluent data points for a chemical precipitation system sampled during two episodes because sampling personnel discovered that overflow rinses from metal finishing operations flowed to the treatment system when the site discontinued production, thus diluting the influent stream to the treatment system.

10.2.2 Assessment of General Treatment System Performance

EPA assessed the performance of each sampled treatment system to identify well-designed and well-operated systems. For this assessment, EPA first identified MP&M unit operations performed on site to determine which pollutants (e.g., metals, cyanide, and oil and grease) the site generated. EPA focused on these pollutants to assess treatment systems because sites design systems to treat the specific pollutants generated on site. In some cases, complete data on the types of pollutants generated at a site were unavailable because EPA toured only a portion of the site. In these cases, EPA reviewed the concentrations of pollutants in the raw wastewater to identify pollutants generated on site. EPA then performed the following technical analyses of the treatment systems to determine which data would be included in the LTA concentrations and variability factors.

1. EPA identified treatment systems that included technologies that were not a part of EPA's technology options.

   - EPA identified one chemical precipitation and sedimentation system that included biological treatment and assigned an “O” flag to all the effluent data associated with this treatment system.

   - EPA identified a cyanide destruction system that added chlorine gas for treatment and assigned an “O” flag to cyanide data for the effluent associated with this treatment system.

2. EPA identified chemical precipitation and cyanide destruction systems that the site did not operate at the optimum pH for treatment of the targeted pollutants. The optimum pH for removal of metals by a chemical precipitation system varies with the combination of metals processed at a site; therefore, EPA based its evaluation of each chemical precipitation system on the site-specific metals processed or treated.

   - EPA assigned a flag of “P” to all effluent data associated with four chemical precipitation and sedimentation systems identified as operating outside pH ranges considered to be optimum for removal of the site-specific targeted metals.

   - EPA assigned flag of “P” to all amenable and total cyanide effluent data associated with two cyanide destruction systems identified as operating outside the optimum pH range for cyanide oxidation.

3. EPA identified treatment systems where the targeted pollutants present in the influent did not decrease across the treatment system, the system had poor removal efficiencies for targeted pollutants, or the effluent concentrations for particular pollutants did not reflect BPT/BAT level of

performance. Because pollutants targeted for removal depend on the pollutants processed at a site and by the treatment technology, EPA evaluated each treatment system separately, depending on the site operations and treatment technology.

Chemical precipitation and sedimentation systems remove metals by sedimentation of metal hydroxides in the form of suspended solids; poor removal of total suspended solids (TSS) typically indicates poor removal of metals in these systems. Therefore, in addition to analyzing for poor metals removal, EPA identified chemical precipitation systems that did not have good TSS removal.

- Of the unflagged data, EPA identified four chemical precipitation systems with poor removal of targeted metals and assigned an “A” flag to all effluent data associated with these systems.

- EPA assigned an “A” flag to amenable and total cyanide effluent data for one cyanide destruction unit identified with poor cyanide removal.

- EPA identified two chemical precipitation systems at two indirect discharging facilities where the average copper and total suspended solids effluent concentrations were greater than the current BPT regulations for these pollutants under 40 CFR 433; therefore, treatment was not indicative of BPT/BAT for direct dischargers. EPA assigned an “A” flag for all copper and total suspended solids data for these two sites.

- EPA identified two indirect discharging facilities where the average total suspended solids effluent concentration in the chemical precipitation system was greater than the current BPT regulation for total suspended solids under 40 CFR 433; therefore, treatment was not indicative of BPT/BAT for direct dischargers. EPA assigned an “A” flag to effluent data for total suspended solids for these treatment systems.

- EPA identified four oily waste facilities that were indirect dischargers and were not required by their publicly owned treatment works (POTW) to control oil and grease to BPT levels. EPA assigned an “A” flag to the effluent data for oil and grease for these four sites.

10.2.3 Identification of Process Upsets That Could Affect Data Quality

EPA reviewed sampling episode reports and data for each sampling episode to identify process upsets occurring on site that could impact treatment efficiency. In this review, EPA also identified any sampling techniques that could affect the validity of analytical data. EPA assigned a flag of "V" to affected pollutants on the days that a system could have been impacted by a process upset or sampling technique. For example, if a process upset or poor sampling technique only occurred on one day, EPA assigned only the data for that day a "V" flag, or if a process upset or poor sampling technique affected only specific pollutants, EPA assigned only the affected pollutants a "V" flag. Because a treatment system may have been sampled during multiple sampling episodes and EPA evaluated each episode separately, the Agency may have flagged a system or pollutant with a "V" during one episode but not for another episode. Below are the results of this analysis.

- EPA identified a chemical precipitation system in which site personnel used barrel finishing wastewater containing iron and aluminum as a flocculation agent. During two sampling days, site personnel used a different barrel finishing solution. On those days, the concentration of metals in the effluent increased, indicating the new solution was not an effective flocculation agent. EPA assigned a "V" flag to all effluent data associated with the two sampling days when the site used the new solution.

- EPA identified a chemical precipitation system in which the effluent concentrations of copper were elevated and copper removal efficiencies were lower than other metals treated by the system. The concentration of cyanide in the influent system was also elevated compared to cyanide concentrations typically seen at other MP&M facilities. These data indicated that the site discharged some copper-cyanide chelates to the system, affecting the system's ability to effectively precipitate copper. EPA sampled this unit during multiple sampling episodes, and it assigned a "V" flag to all effluent data for copper during these sampling episodes.

- EPA identified a chemical precipitation system where the effluent concentrations of chromium were elevated compared to other metals treated by the system. The site had a chromium reduction system that EPA did not sample; however, based on data for hexavalent chromium in the chemical precipitation system, EPA determined that the chromium reduction system was not operating optimally during the sampling episode. EPA assigned a "V" flag to the chromium data for this chemical precipitation system.

- EPA identified a chemical precipitation system where the effluent concentrations of nickel were elevated compared to other metals treated.

EPA sampled this system during two sampling episodes. The elevated nickel concentrations indicated that the batch chelation-breaking system for electroless nickel rinses may not have been operating optimally. The site combined the electroless nickel treatment sludges with other wastewater prior to chemical precipitation. The liquid fraction of the sludge likely contained chelated nickel, which then entered the chemical precipitation system and could not be efficiently precipitated. EPA assigned a "V" flag to all nickel effluent data for this treatment unit for two sampling episodes.

- EPA identified a cyanide destruction system where cyanide samples could not be preserved until the end of the compositing period. Because some degradation of cyanide may have occurred during this time, actual values for cyanide may be higher than the measured value; therefore, EPA could not accurately evaluate the data. EPA assigned a "V" flag to all cyanide effluent data for this system during the sampling episode.

- EPA identified a cyanide destruction system where the concentration of cyanide and metals in the effluent were very high and comparable to those seen in the influent to treatment systems. The data indicate that the effluent samples may have been collected at an incorrect location so the data could not be evaluated for this sampling episode. EPA assigned a "V" flag to all cyanide effluent data for this system during the sampling episode.

- EPA identified a chemical oil-emulsion breaking system where site personnel did not add oil-emulsion breaking polymer on one sampling day. On this day, the concentration of oil and grease, total petroleum hydrocarbons, and total suspended solids was higher in the effluent than on the other sampling days, indicating that omission of the polymer may have affected treatment on that day. EPA assigned a "V" flag to oil and grease, total petroleum hydrocarbons, and total suspended solids effluent data for that sampling day.

- EPA identified an ultrafiltration system where the concentration of chromium in the influent was significantly higher on one sampling day than on the other days, and the concentration increased across the system. These data indicated that the site had an unintended discharge of chromium to the treatment system on that day at concentrations that were too high for the system to effectively treat. EPA assigned a "V" flag to the chromium data for the effluent on this sampling day.

10.2.4 Identification of Wastewater Treatment Chemicals

EPA identified wastewater treatment chemicals used in each of the sampled treatment systems. EPA assigned a flag of "G" to the treatment chemicals if they did not have removals comparable to other metals on site, indicating a well-designed and well-operated system. EPA assigned this flag to 194 effluent data points. Treatment chemicals typically flagged included sodium, magnesium, aluminum, iron, and calcium. EPA flagged total dissolved solids along with specific treatment chemicals, because the total dissolved solids concentration generally increases as a result of treatment chemical addition.

10.3 Development of Long-Term Averages and Variability Factors

EPA used all unflagged data in the LTA Database to calculate the LTA concentrations and variability factors that are the basis for the proposed effluent limitations and standards. EPA calculated LTAs and variability factors from actual concentrations of constituents measured in MP&M wastewater and treated by MP&M end-of-pipe technology options (see Section 10.2). As described in Section 10.1, EPA sampling, industry trade association sampling, and sanitation district sampling episodes at MP&M facilities provided the data sets of daily effluent concentrations. The following sections discuss development of LTAs and variability factors (VFs).

For each sampling episode, EPA calculated LTAs for all pollutants that had at least one sample that passed the data editing review (Section 10.2). The Agency calculated the LTA for each pollutant as the arithmetic average of the daily concentration values. For samples where a pollutant was not detected in a sample, EPA used the sample detection limit to calculate the LTA. EPA calculated the LTA for each pollutant for each subcategory by taking the median value of the sampling episode LTAs for those episodes within each subcategory. EPA transferred effluent data from one subcategory to another subcategory when sufficient data were not available to calculate the limit for a specific pollutant within the original subcategory.

As discussed in Section 7.0, EPA is proposing a limitation for a Total Organics Parameter (TOP). Table 10-7 lists the priority and nonconventional organics that are included as part of this parameter. Section 10.4 presents EPA's methodology for calculating the proposed TOP limitations. Table 10-8A presents LTAs and VFs for total and amenable cyanide for all options for the applicable subcategories. Tables 10-8B through 10-8K show LTAs and VFs for each pollutant for each technology option in each subcategory. Tables 10-9A through 10-9J list the LTAs, VFs, and limitations for each subcategory.

10.3.1 Derivation of the Proposed Limitations

The limitations and standards are the result of multiplying the LTAs by the appropriate variability factors. The same basic procedures apply to the calculation of all limitations and standards for this industry, regardless of whether the technology is BPT, BCT, BAT, NSPS, PSES or PSNS.

The limitations for pollutants for each option are provided as 'daily maximums' and 'maximums for monthly averages.' Definitions provided in 40 CFR 122.2 state that the daily maximum limitation is the "highest allowable 'daily discharge'" and the maximum for monthly average limitation (also referred to as the "monthly average limitation") is the "highest allowable average of 'daily discharges' over a calendar month, calculated as the sum of all 'daily discharges' measured during a calendar month divided by the number of 'daily discharges' measured during that month." EPA defines daily discharges as the "'discharge of a pollutant' measured during a calendar day or any 24-hour period that reasonably represents the calendar day for purposes of samplings."

EPA calculates the limitations based upon percentiles that reflect both the variability within control of the facility and a level of performance consistent with the Clean Water Act requirement that these effluent limitations be based on the "best" technologies. The daily maximum limitation is an estimate of the 99th percentile of the distribution of the *daily* measurements. The monthly average limitation is an estimate of the 95th percentile of the distribution of the *monthly* averages of the daily measurements.

In establishing daily maximum limitations, EPA's objective is to restrict the discharges on a daily basis at a level that is achievable for a facility that targets its (well-operated and well designed) treatment at the long-term average. EPA acknowledges that variability around the long-term average results from normal operations. This variability means that occasionally facilities may discharge at a level that is greater than the long-term average. This variability also means that facilities may occasionally discharge at a level that is considerably lower than the long-term average. To allow for these possibly higher daily discharges, EPA has established the daily maximum limitation. A facility that discharges consistently at a level near the daily maximum limitation would <u>not</u> be operating its treatment to achieve the long-term average which is part of EPA's objective in establishing the daily maximum limitations.

In establishing monthly average limitations, EPA's objective is to provide an additional restriction that supports EPA's objective of having facilities target their average discharges to achieve the long-term average. The monthly average limitation requires continuous dischargers to provide on-going control, on a monthly basis, that complements controls imposed by the daily maximum limitation. To meet the monthly average limitation, a facility must counterbalance a value near the daily maximum limitation with one or more values well below the daily maximum limitation. To achieve compliance, these values must result in a monthly average value at or below the monthly average limitation.

In the first of two steps in estimating both types of limitations, EPA determines an average performance level (the "long-term average" discussed in Section 10.3.4) that a facility with well-designed and operated model technologies (which reflect the appropriate level of control) is capable of achieving. This long-term average is calculated from the data from the facilities using the model technologies for the option. EPA expects that all facilities subject to the limitations will design and operate their treatment systems to achieve the long-term average

performance level on a consistent basis because facilities with well-designed and operated model technologies have demonstrated that this can be done.

In the second step of developing a limitation, EPA determines an allowance for the variation in pollutant concentrations when processed through extensive and well designed treatment systems. This allowance for variance incorporates all components of variability including treatment process sampling and analytical variability. This allowance is incorporated into the limitations through the use of the variability factors (discussed in Section 10.3.5) which are calculated from the data from the facilities using the model technologies. If a facility operates its treatment system to meet the relevant long-term average, EPA expects the facility to be able to meet the limitations. Variability factors assure that normal fluctuations in a facility's treatment are accounted for in the limitations. By accounting for these reasonable excursions above the long-term average, EPA's use of variability factors results in limitations that are generally well above the actual long-term averages.

Tables 10-9A through 10-9J present the limitations.

10.3.2 Steps Used to Derive Concentration-Based Limitations

The derivation of the concentration-based daily and monthly maximum limitations uses the pollutant-specific LTAs and respective VFs. The following steps are used to derive the concentration-based limitations.

Step 1: Calculate the facility-specific LTAs and 1-day and 4-day VFs for all facilities. Calculation of VFs is performed when the facility has four or more observations with two or more distinct detected values.

Step 2: For each option in the subcategory, calculate the median of the facility-specific LTAs and the mean of the facility-specific 1-day and 4-day VFs to provide pollutant-specific LTAs and 1-day and 4-day VFs.

Step 3: Calculate the daily limitations for a pollutant using the product of the pollutant-specific LTA and the pollutant-specific 1-day VF. Calculate monthly average limitations using the product of the pollutant-specific LTA and the pollutant-specific 4-day VF.

10.3.3 Modified Delta-Lognormal Model

EPA selected the modified delta-lognormal distribution to model pollutant effluent concentrations from the MP&M industry in developing the variability factors. A typical effluent data set from a facility in this industry consists of a mixture of measured (detected) and nondetected values. Within a data set, gaps between the values of detected measurements and the sample-specific detection limits associated with nondetected measurements may indicate that different pollutants were present in the different industrial wastes treated by a facility.

Nondetected measurements may indicate that the pollutant is not generated by a particular source or industrial process. The modified delta-lognormal distribution is appropriate for such data sets because it models the data as a mixture of measurements that follow a lognormal distribution and nondetect measurements that occur with a certain probability. The generalized form of the model also allows for the possibility that nondetect measurements occur at multiple sample- specific detection limits. Because the data appear to fit the modified delta-lognormal model reasonably well, EPA believes this model is an appropriate model for the MP&M industry data.

The modified delta-lognormal distribution is a modification of the 'delta distribution' originally developed by Aitchison and Brown[1]. The resulting mixed distributional model, which combines a continuous density portion with a discrete-valued spike at zero, is also known as the delta-lognormal distribution. The delta in the name refers to the proportion of the overall distribution contained in the discrete distributional spike at zero, that is, the proportion of zero amounts. The remaining non-zero, non-censored (NC) values are grouped together and fit to a lognormal distribution.

EPA modified this delta-lognormal distribution to incorporate multiple detection limits. In the modification of the delta portion, the single spike located at zero is replaced by a discrete distribution made up of multiple spikes. Each spike in this modification is associated with a distinct sample-specific detection limit associated with nondetected (ND) measurements in the database. A lognormal density is used to represent the set of measured values. Figure 10-2 shows this modification of the delta-lognormal distribution.

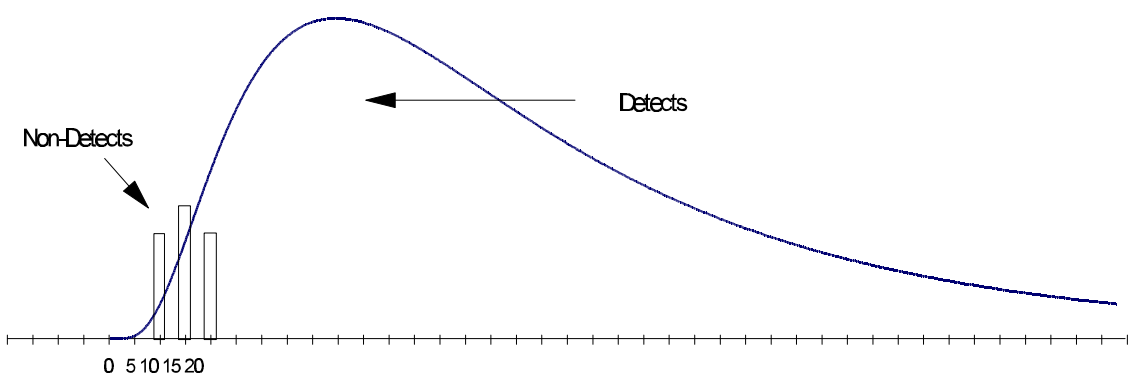

Figure 10-2. Modified Delta-Lognormal Model

In the modified model, * represents the proportion of NDs, but is divided into the sum of smaller fractions, $*_i$, each representing the proportion of NDs associated with a particular and distinct detection limit. Thus it is written as

[1]Aitchison, J. and Brown, J.A.C. (1963) The Lognormal Distribution. Cambridge University Press, pages 87-99.

$$\delta = \sum_i (\delta_i). \qquad \textbf{(10-1)}$$

If D_i equals the value of the ith smallest distinct detection limit in the data set, and the random variable X_D represents a randomly chosen ND sample, then the discrete distribution portion of the modified delta-lognormal model is mathematically expressed as

$$Pr(X_D \le x) = \sum_{i:D_i \le x} \delta_i. \qquad \textbf{(10-2)}$$

EPA uses the following formulas to calculate the mean and variance of this discrete distribution:

$$E(X_D) = \frac{1}{\delta}\sum_i \delta_i D_i \quad \text{and} \quad Var(X_D) = \frac{1}{\delta^2}\sum_{i}\sum_{i<j}\sum_{j} \delta_i \delta_j (D_j - D_i)^2. \qquad \textbf{(10-3)}$$

10.3.4 Estimation Under the Modified Delta-Lognormal Model

A wide variety of observed effluent data sets fit the modified model. The model also handles multiple detection limits for NDs. The same basic framework is used even if there are no ND values or censored data.

U is the modified delta lognormal random variable which combines the discrete portion of the model with the continuous portion. The following equation expresses the cumulative probability distribution of the modified delta-lognormal model, where D_k denotes the largest distinct detection limit observed among the NDs and the first summation is taken over all those values, D_i, that are less than u.

$$Pr(U \le u) = \begin{cases} \sum_{i:D_i<u} \delta_i + (1-\delta)\Phi\left[(\log(u) - \mu)/\sigma)\right] & \text{if } u<D_k \\ \delta + (1-\delta)\Phi\left[(\log(u) - \mu)/\sigma)\right] & \text{if } u \ge D_k \end{cases} \qquad \textbf{(10-4)}$$

Again combining the discrete and continuous portions of the modified model, the expected value of the random variable U is derived as a weighted sum of the expected values of the discrete and continuous lognormal portions of the distribution. This follows because the modified delta-lognormal random variable U is expressed again as a combination of three other independent variables, that is,

$$U = I_u X_D + (1 - I_u) X_C \qquad \textbf{(10-5)}$$

where this time X_D represents a random ND from the discrete portion of the model, X_C represents a random detected measurement from the continuous lognormal portion, and I_u is an indicator

variable signaling whether any particular random measurement is detected or not. Then the expected value and variance of U have the form

$$E(U) = \sum_i \delta_i D_i + (1-\delta)\exp(\mu + 0.5\sigma^2) \qquad \textbf{(10-6)}$$

$$Var(U) = \frac{\sum_i \sum_{j\ i<j} \delta_i \delta_j (D_i - D_j)^2}{\delta} + (1-\delta)\exp(2\mu + \sigma^2)(\exp(\sigma^2) - 1) + \delta(1-\delta)\left[\frac{\sum_i \delta_i D_i}{\delta} - \exp(\mu + 0.5\sigma^2)\right]^2 \qquad \textbf{(10-7)}$$

where D_i = detection limit for the ith smallest ND value
D_j = detection limit for the jth smallest ND value, where i < j
*$_i$ = proportion of NDs with detection limit = D_i
*$_j$ = proportion of NDs with detection limit = D_j
* = proportion of all NDs
: = mean log concentrations of NC values
F = standard deviation of log NC values.

10.3.5 Estimation of LTAs and VFs (Data Groups)

To estimate facility-specific long-term averages (LTAs) and variability factors (VFs), EPA divided the MP&M data sets into two groups based on their size (number of samples) and the type of samples in the subset because the computations differ for each group. EPA defined the groups as follows:

Group 1: Less than 2 NC (detectable) samples or less than 4 total samples at a facility. Specifically, Group 1 contains all data subsets with all NDs or only one detect. Sample-specific detection limits are substituted as the values associated with nondetected pollutants.

Group 2: Two or more NC (detectable) samples and 4 or more total samples. Sample-specific detection limits are substituted as the values associated with nondetected pollutants.

10.3.6 Estimation of LTAs

EPA first calculated facility-specific LTAs as the arithmetic average of the samples using data from Groups 1 and 2. EPA then derived pollutant-specific LTAs from the

facility-specific LTAs. Pollutant-specific LTAs provide one concentration for a specific pollutant for all facilities within a subcategory and option.

Within each subcategory and option combination, EPA calculated pollutant-specific LTAs as the median of the facility-specific LTAs for that pollutant. The median is the midpoint of the values ordered (i.e., ranked) from smallest to largest. If there is an odd number of values (with n=number of values), then the value of the (n+1)/2 ordered observation is the median. If there is an even number of values, then the two values of the n/2 and [(n/2)+1] ordered observations are arithmetically averaged to obtain the median value.

10.3.7 Estimation of VFs

EPA developed 1-day and 4-day facility-specific VFs for all regulated pollutants using Group 2 data only. EPA did not use Group 1 data to estimate VFs because the data were insufficient for estimating variability using the modified delta-lognormal methodology.

For Group 2, EPA calculated the parameters for the lognormal portion of the data using maximum likelihood estimation in the log-domain. Upper percentiles and VFs are calculated using these estimated parameters. Calculation of these VFs is described in Section 10.3.7.1 and 10.3.7.2.

10.3.7.1 Estimation of 1-day VFs

The 1-day facility-specific VFs are a function of the facility-specific LTA and the 99th percentile. The 99th percentile of each data subset is calculated using the modified delta-lognormal methodology by first defining D_0=0, $*_0$=0, and D_{k+1} = 4 as boundary conditions, where D_i equals the ith smallest detection limit, and $*_i$ is the associated proportion of NDs at the ith detection limit. A cumulative distribution function, p, for each data subset is computed as a function ranging from 0 to 1. The general form for p, for a given value c, is

$$p = P(U \le c) = \sum_{i=0}^{m} \hat{\delta}_i + (1-\hat{\delta})\ \Phi\left[\frac{\log(c)-\hat{\mu}}{\hat{\sigma}}\right], \quad D_m \le c < D_{m+1},\ m=0,1,\ldots k \qquad \textbf{(10-8)}$$

where

$$\hat{\mu} = \frac{\sum_{i=1}^{n} \ln(x_i)}{n}, \qquad \textbf{(10-9)}$$

$$\hat{\sigma}^2 = \frac{1}{n-1} \sum_{i=1}^{n} \left(\ln(x_i) - \hat{\mu}\right)^2 , \qquad \textbf{(10-10)}$$

and M is the standard normal cumulative distribution function. EPA calculated the estimated 99th percentile of each data subset as follows:

1. k values of p at $c=D_m$, m=1,...k are computed and labeled p_m.

2. The smallest value of m, such that p_m $ 0.99, is determined and labeled as p_j. If no such m exists, steps 3 and 4 are skipped and step 5 is computed instead.

3. $p^* = p_j$ - *$_j$ is computed.

4. If $p^* < 0.99$, then $P_{99} = D_j$,
   else if p^* $ 0.99, then

$$\hat{P}_{99} = \exp\left[\hat{\mu} + \Phi^{-1}\left[\frac{\left(0.99 - \sum_{i=0}^{j-1} \hat{\delta}_i\right)}{(1-\hat{\delta})}\right]\hat{\sigma}\right]. \qquad \textbf{(10-11)}$$

5. If no such m exists, such that p_m $ 0.99 (m=1,...k), then

$$\hat{P}_{99} = \exp\left[\hat{\mu} + \Phi^{-1}\left[\frac{0.99 - \hat{\delta}}{(1-\hat{\delta})}\right]\hat{\sigma}\right]. \qquad \textbf{(10-12)}$$

The daily VF, VF1, is then calculated as

$$VF1 = \frac{\hat{P}_{99}}{\hat{E}(U)} \qquad \textbf{(10-13)}$$

where

$$\hat{E}(U) = \sum_i \hat{\delta}_i D_i + (1-\hat{\delta})\exp(\hat{\mu} + 0.5\,\hat{\sigma}^2).$$

A pollutant-specific 1-day VF is the mean of the facility-specific daily VFs for that pollutant in the subcategory and option combination.

10.3.7.2 Estimation of 4-day VFs

EPA calculated a facility-specific VF for monthly averages based on the distribution of 4-day averages. To calculate the 4-day facility-specific VF, EPA assumed that the approximating distribution of $\hat{a}_4$, the sample mean for a random sample of four independent concentration values, also is derived from this modified delta-lognormal distribution with the same mean as the distribution of the concentration values. The mean of this distribution of 4-day averages is

$$E(\bar{U}_4) = \delta_4 E(\bar{X}_4)_D + (1-\delta_4)E(\bar{X}_4)_C \qquad \textbf{(10-14)}$$

where $E(X_4)_D$ denotes the mean of the discrete portion of the distribution of the average of four independent concentration values (i.e., when all observations are not detected), and $E(X_4)_C$ denotes the mean of the continuous lognormal portion of the distribution.

First, EPA assumed that the probability of nondetection (*) on each of the four days is independent of that on the other days, and the nondetected values are therefore not correlated; consequently, $*_4 = *^4$. Also, because

$$E(\bar{X}_4)_D = E(X_D)$$

then

$$E(\bar{U}_4) = \delta^4 \sum_{i=1}^{k} \frac{\delta_i D_i}{\delta} + (1-\delta^4)\exp(\mu_4 + 0.5\sigma^2_4) \qquad \textbf{(10-15)}$$

and since $E(\hat{a}_4) = E(U)$, then

$$\mu_4 = \log\left[\frac{E(U) - \delta^3 \sum_{i=1}^{k} \delta_i D_i}{(1-\delta^4)}\right] - 0.5\sigma^2_4. \qquad \textbf{(10-16)}$$

The expression for F^2_4 is derived from the following relationship:

$$Var(\bar{U}_4) = \delta_4 Var((\bar{X}_4)_D) + (1-\delta_4)Var((\bar{X}_4)_C) + \delta_4(1-\delta_4)[E(\bar{X}_4)_D - E(\bar{X}_4)_C]^2. \qquad \textbf{(10-17)}$$

Because

$$Var((\bar{X}_4)_D) = \frac{Var(X_D)}{4}, \quad E(\bar{X}_4)_D = E(X_D), \quad and \quad \delta_4 = \delta^4 \qquad \textbf{(10-18)}$$

then

$$Var(\bar{U}_4) = \delta^4 \frac{Var(X_D)}{4} + (1-\delta^4)Var((\bar{X}_4)_C) + \delta^4(1-\delta^4)[E(X_D) - E(\bar{X}_4)_C]^2. \qquad \textbf{(10-19)}$$

This further simplifies to

$$Var(\bar{U}_4) = \frac{\delta^4 \sum_{i=1}^{k} \sum_{i<j\ j=1}^{k} \delta_i \delta_j (D_i - D_j)^2}{4\delta^2} + (1-\delta^4)\exp(2\mu_4 + \sigma^2{}_4)[\exp(\sigma^2{}_4) - 1] + \delta^4(1-\delta^4)\left[\sum_{i=1}^{k} \frac{\delta_i D_i}{\delta} - \exp(\mu_4 + 0.5\sigma^2{}_4)\right]^2 \qquad \textbf{(10-20)}$$

and furthermore,

$$\exp(\sigma^2{}_4) - 1 = \frac{\left[Var(\bar{U}_4) - \frac{\delta^2 \sum_{i=1}^{k} \sum_{i<j\ j=1}^{k} \delta_i \delta_j (D_i - D_j)^2}{4} - \delta^2(1-\delta^4)\left[\sum_{i=1}^{k} \delta_i D_i - \delta \exp(\mu_4 + 0.5\sigma^2{}_4)\right]^2\right]}{(1-\delta^4)\exp(2\mu_4 + \sigma^2{}_4)}. \qquad \textbf{(10-21)}$$

Then, from (10-15) above,

$$\exp(\mu_4 + 0.5\sigma^2{}_4) = \frac{(E(\bar{U}_4) - \delta^3 \sum_{i=1}^{k} \delta_i D_i)}{(1-\delta^4)} = \frac{(E(U) - \delta^3 \sum_{i=1}^{k} \delta_i D_i)}{(1-\delta^4)}, \quad \text{because } E(\bar{U}_4) = E(U \qquad \textbf{(10-22)}$$

and letting

$$\eta = E(U) - \delta^3 \sum_{i=1}^{k} \delta_i D_i, \quad \text{then,} \quad \exp(\mu_4 + 0.5\sigma^2{}_4) = \frac{\eta}{(1-\delta^4)}. \qquad \textbf{(10-23)}$$

Furthermore,

$$\sigma^2{}_4 = \log\left[1 + \frac{\left[Var(\bar{U}_4) - \frac{\delta^2 \sum_{i=1}^{k} \sum_{i<j\ j=1}^{k} \delta_i \delta_j (D_i - D_j)^2}{4} - \delta^2(1-\delta^4)\left(\sum_{i=1}^{k} \delta_i D_i - \frac{\delta\eta}{(1-\delta^4)}\right)^2\right]}{\frac{(1-\delta^4)\eta^2}{(1-\delta^4)^2}}\right]. \qquad \textbf{(10-24)}$$

Since Var($\hat{a}_4$) = Var(U)/4, then, by rearranging terms,

$$\sigma^2_4 = \log\left[1 + \frac{(1-\delta^4)Var(U)}{4\eta^2} - \frac{(1-\delta^4)\delta^2 \sum_{i=1}^{k}\sum_{i<j}^{k}\delta_i\delta_j(D_i - D_j)^2}{4\eta^2} - \frac{\delta^2\left[\sum_{i=1}^{k}\delta_i D_i(1-\delta^4) - \delta\eta\right]^2}{\eta^2}\right]. \quad \textbf{(10-25)}$$

Thus, estimates of $:_4$ and F_4 are derived by using estimates of $*_1,...*_k$ (sample proportion of NDs at observed detection limits $D_1,...D_k$), $:$ (maximum likelihood estimate (MLE) of logged values), and F^2 (MLE logvariance multiplied by $\frac{n}{n-1}$ to reflect estimation from sample) in the equations above.

To find the estimated 95th percentile of the average of four observations, four NDs, not all at the same detection limit, an average is generated that is not necessarily equal to D_1, D_2,..., or D_k. Consequently, more than k discrete points exist in the distribution of the 4-day averages. For example, the average of four NDs at k=2 detection limits are at the following discrete points with the associated probabilities:

i	D^*_i	δ^*_i
1	D_1	δ_1^4
2	$(3D_1 + D_2)/4$	$4\delta_1^3\delta_2$
3	$(2D_1 + 2D_2)/4$	$6\delta_1^2\delta_2^2$
4	$(D_1 + 3D_2)/4$	$4\delta_1\delta_2^3$
5	D_2	δ_2^4

In general, when all four observations are not detected, and when k detection limits exist, the multinomial distribution is used to determine associated probabilities; that is,

$$Pr\left[\bar{U}_4 = \frac{\sum_{i=1}^{k} u_i D_i}{4}\right] = \frac{4!}{u_1!\,u_2!\ldots u_k!}\prod_{i=1}^{k}\delta_i^{u_i}. \quad \textbf{(10-26)}$$

where u_i is the number of nondetected measurements in the data set with the D_i detection limit. The number of possible discrete points, k^*, for k=1,2,3,4, and 5 are given below:

k	k^*
1	1
2	5
3	15
4	35
5	70

To find the estimated 95th percentile of the distribution of the average of four observations, the same basic steps (described in Section 10.3.7.1) as used for the 99th percentile of the distribution of daily observations are followed, with the following changes:

1. Change P_{99} to P_{95}, and 0.99 to 0.95.
2. Change D_m to D_m^*, the weighted averages of the detection limits.
3. Change $*_i$ to $*_i^*$.
4. Change k to k^*, the number of possible discrete points based on k detection limits.
5. Change the estimates of *, :, and F to estimates of $*^4$, $:_4$, and F_4, respectively.

Then, the estimate of the 95th percentile 4-day facility-specific mean VF is:

$$VF4 = \frac{\hat{P}_{95}}{\hat{E}(U)}. \qquad \textbf{(10-27)}$$

A pollutant-specific 4-day VF is the mean of the facility-specific 4-day VFs for that pollutant in the subcategory and option combination.

10.4 Methodology for Development of TOP Long-Term Averages and Variability Factors

EPA used the following steps to calculate the LTAs and VFs for the Total Organic Parameter:

- Determine the LTA for each organic component;
- Sum the component LTAs;
- Multiply the total LTA by the mean VF across the individual organic components; and
- Add the sum of nominal quantitation limits for top pollutants that are not in the LTA database.

Table 10-7 lists the nominal quantitation values for all of the TOP pollutants and indicates which TOP pollutants EPA had sufficient data for in its LTA database to calculate an LTA. For those without data in the LTA database, EPA used the nominal quantitation limit in calculating the TOP limits. See the Statistical Support Document for Proposed Effluent Limitations Guidelines and Standards for the Metal Products and Machinery Industry for more information on the statistical procedures used to develop the TOP limitations.

Table 10-1

Number of Evaluated Treatment Systems for Each Subcategory

MP&M End-of-Pipe Technology Option	Number of Treatment Units
Cyanide destruction (applies to all subcategories where cyanide is a regulated pollutant)	13
General Metals Subcategory	
Chemical precipitation and clarification using sedimentation (Option 2)	29
Chemical precipitation and clarification using membrane filtration (Option 4)	4
Metal Finishing Job Shop Subcategory	
Chemical precipitation and clarification using sedimentation (Option 2)	6
Printed Wiring Boards Subcategory	
Chemical precipitation and clarification using sedimentation (Option 2)	2
Chemical precipitation and clarification using membrane filtration (Option 4)	1
Shipbuilding Drydock Subcategory	
DAF	3
Oily Wastes Subcategory	
Chemical emulsion breaking and oil-water separation (Option 2)	5
Railroad Line Maintenance Subcategory	
DAF (Option 2)	1
Nonchromium Anodizing Subcategory	
Chemical precipitation and clarification using sedimentation (Option 2)	2

Source: MP&M LTA Database.

Table 10-2

Influent and Effluent Data Points from EPA Sampling Episodes

MP&M End-of-Pipe Technology Option	Number of Sites[a]	Number of Sampling Episodes[a]	Number of Treatment Units	Number of Data Points[b]
Chemical precipitation and clarification using sedimentation	39	42	42	62,892
Chemical precipitation and clarification using membrane filtration	5	5	5	12,824
Ultrafiltration	15	15	16	28,150
DAF	2	3	2	4,872
Chemical emulsion breaking and oil-water separation	5	5	5	11,926
Cyanide destruction	17	19	17	218
Total	53	57	87	120,882

[a]EPA conducted multiple sampling episodes at some sites and sampled multiple treatment units at some sites; therefore, the total does not equal the sum of a column.
[b]The database contains 137,823 influent and effluent data points from EPA sampling episodes. For cyanide destruction, EPA included only data points for amenable and total cyanide in the LTA analysis (to calculate LTAs, the Agency did not use 16,843 data points associated with analytes other than cyanide across cyanide destruction treatment units). EPA used data points for organic, metal, conventional, and nonconventional pollutants in the LTA analysis for treatment units other than cyanide destruction; however, it did not include cyanide (total and amenable) in the analysis for these other treatment units (98 data points associated with cyanide data across treatment units not designed for cyanide destruction were not evaluated).
Source: MP&M LTA Database.

Table 10-3

Influent and Effluent Data Points from Industry and Local Sanitation District Sampling Episodes

MP&M End-of-Pipe Technology Option	Number of Sites[a]	Number of Sampling Episodes[a]	Number of Treatment Units	Number of Data Points[b]
Chemical precipitation and clarification using sedimentation	3	4	3	1,752
DAF	2	2	2	2,759
Cyanide destruction	4	5	4	83
Total	5	6	9	4,594

[a]Sanitation districts conducted multiple episodes at some sites and sampled multiple treatment units at some sites; therefore, the total does not equal the sum of a column.
[b]The database contains 6,616 influent and effluent data points from industry and local sanitation district sampling. For cyanide destruction, EPA included only data points for amenable and total cyanide in the LTA analysis; therefore, to calculate LTAs, it did not use 2,022 data points associated with analytes other than cyanide cross cyanide destruction treatment units. EPA used data points for organic, metal, conventional, and nonconventional pollutants in the LTA analysis for all treatment units other than cyanide destruction; however, it did not include cyanide (total and amenable) in the analysis for these other treatment units.
Source: MP&M LTA Database.

Table 10-4

Industry-Supplied Effluent Monitoring Data

Treatment Type	Number of Sites	Number of Treatment Units	Number of Effluent Data Points
Chemical precipitation and clarification using sedimentation	5	5	2,505
Chemical precipitation and clarification using membrane filtration	3	3	708
Ultrafiltration	2	2	393
DAF for oily waste streams	2	2	439
Chemical oil-emulsion breaking	1	1	355
Cyanide destruction	3	3	109

Source: MP&M LTA Database.

Table 10-5

Number of Effluent Data Points Flagged for Each MP&M Technology Option

MP&M End-of-Pipe Technology Option	Number of Effluent Data Points Evaluated [a]	Number of Flagged Effluent Data Points												Number of Unflagged Effluent Data Points
		N	C	F	LC	LA	1	2	O	P	A	V	G	
Chemical Precipitation with Membrane Filtration	2,856	2,061	453	10	35	12	0	0	0	0	10	0	55	220
Chemical Precipitation with Sedimentation	15,743	9,091	3,665	36	259	0	147	109	33	155	178	40	309	1,721
Cyanide Destruction	151	2	19	0	4	0	0	5	1	10	1	13	0	96
Ultrafiltration	6,442	3,828	1,044	8	163	35	0	0	0	0	0	1	0	1,363
Chemical Emulsion Breaking and Oil/Water Separation	2,626	1,492	519	25	51	0	0	8	0	0	14	3	47	475
DAF	1,754	1,013	444	6	25	10	0	0	0	0	0	0	29	227
Total	29,572	17,487	6,144	85	537	57	147	122	34	165	203	57	440	4,102

[a] EPA only evaluated data for pollutants of concern. Data for cyanide destruction units are for amenable and total cyanide only. Data points for treatment units (other than cyanide destruction) are for priority metals and organics, nonconventional metals and organics, and conventional and nonconventional pollutant parameters, and exclude cyanide data. Section 7.0 lists the pollutants of concern.

Table 10-6A

MP&M Technology Effectiveness Concentrations for Total and Amenable Cyanide Destruction[a]

Episode	Daily Influent Concentration (mg/L, ppm)					Daily Effluent Concentration (mg/L, ppm)				
	Day 1	Day 2	Day 3	Day 4	Day 5	Day 1	Day 2	Day 3	Day 4	Day 5
Total Cyanide										
4274	CBI	CBI	CBI	CBI	CBI	0.01	0.01	0.01	---	---
4279	9.9	7.6	11.0	50.0	48.0	0.01	0.01	0.01	0.01	0.01
4384	CBI	CBI	CBI	CBI	CBI	0.99	0.69	0.76	0.94	0.46
4460A	---	21.1	---	---	---	---	0.02	---	---	---
4807	---	0.077	47.8	4.25	0.094	0.021	0.028	0.047	0.020	0.020
4817	345	368	371	394	---	0.58	0.81	0.20	0.61	0.02
4828	---	---	8.64	17.9	2.99	0.062	0.180	0.092	0.076	0.049
4834	CBI	CBI	CBI	CBI	CBI	0.02	0.02	0.02	0.02	0.02
4847	0.024	2.3	0.026	0.01	3.22	---	0.019	0.010	0.010	0.010
4891	CBI	CBI	CBI	CBI	CBI	0.056	0.110	0.044	0.071	0.160
4904	6.33	12.70	6.80	10.90	7.29	0.175	0.117	0.325	0.309	0.359
6048	7.38	9.72	6.59	5.14	10.40	0.17	0.30	0.19	0.17	0.20
6186	97.7	66.2	69.0	75.3	102.0	0.13	0.20	0.21	0.24	0.20
Amenable Cyanide										
4807	---	0.077	47.7	4.25	0.02	0.02	0.02	0.02	0.02	0.02
4817	345	368	371	394	---	0.58	0.81	0.20	0.58	---
4828	---	---	8.62	17.40	2.91	0.035	0.160	0.063	0.038	0.024
4834	CBI	CBI	CBI	CBI	CBI	0.02	0.02	0.02	0.02	0.02
4847	0.01	2.21	0.03	0.01	3.15	---	0.01	0.01	0.01	0.01
4904	6.33	12.50	6.53	10.30	4.43	0.162	0.073	0.143	0.134	0.082
6048	6.96	9.21	6.13	4.87	9.60	0.02	0.037	0.005	0.005	0.014
6186	97.4	65.7	68.5	74.8	102.0	0.049	0.022	0.017	0.110	0.110

[a]Pollutants not detected in an effluent sample are reported at the detection limit. In these cases, concentrations at influent to treatment were determined to be at treatable concentrations (see Section 10.2).
--- No samples collected on this day.
CBI - Confidential Business Information.

Table 10-6B

MP&M Technology Effectiveness Concentrations for General Metals and Steel Forming and Finishing Subcategories (Option 2)[a,b]

Episode	Daily Influent Concentration (mg/L, ppm)					Daily Effluent Concentration (mg/L, ppm)				
	Day 1	Day 2	Day 3	Day 4	Day 5	Day 1	Day 2	Day 3	Day 4	Day 5
Oil and Grease										
4737	CBI	CBI	CBI	CBI	CBI	14.4	16.5	14.1	10.0	13.0
4871	114.0	53.1	39.9	92.0	37.4	6.02	6.22	6.17	6.12	6.15
Total Suspended Solids (TSS)										
1197A	12	54	260	---	---	28.0	20.0	32.0	---	---
4011	CBI	CBI	CBI	CBI	CBI	28.0	30.0	22.0	---	---
4079	CBI	CBI	CBI	CBI	CBI	9.0	5.0	5.0	---	---
4277	320	20	11	13	16	14.0	14.0	17.0	10.0	17.0
4384	CBI	CBI	CBI	CBI	CBI	50.0	32.0	55.0	23.0	68.0
4415	---	77.1	119.0	130.6	---	---	1.0	1.0	1.0	—
4417	430	70	32	22	4	12.0	10.0	7.0	4.0	2.0
4438	410	---	---	10	11	7.0	---	---	8.0	5.0
4470	CBI	CBI	CBI	CBI	CBI	14.5	10.0	10.0	22.0	32.0
4737	CBI	CBI	CBI	CBI	CBI	20.0	14.5	35.0	12.5	38.0
4761	CBI	CBI	CBI	CBI	CBI	17.0	24.0	25.0	---	---
4762	CBI	CBI	CBI	CBI	CBI	14.0	16.0	13.0	16.0	13.0
4807	172	150	144	124	124	6.0	16.0	7.5	8.0	4.0
4811	CBI	CBI	CBI	CBI	CBI	4.0	4.0	4.0	4.0	4.0
4817	46	14	66	108	61	8.0	4.0	21.0	18.0	8.0
4833	115	150	129	244	230	6.5	7.0	17.5	5.5	5.5
4834	CBI	CBI	CBI	CBI	CBI	4	14	4	44	7
4871	724	538	193	647	258	7	8	6	4	4
4904	6230	8080	8920	7520	6240	4.5	4.0	4.0	8.5	7.5
Manganese										
4762	CBI	CBI	CBI	CBI	CBI	0.168	0.165	0.097	0.130	0.134
4807	0.446	0.358	0.469	1.60	1.31	0.030	0.047	0.040	0.071	0.061
4871	8.67	7.83	3.97	10.10	5.49	0.103	0.104	0.088	0.076	0.087
4904	3.53	6.11	5.20	5.69	4.33	0.0144	0.0209	0.0132	0.0079	0.0097

Table 10-6B (Continued)

Episode	Daily Influent Concentration (mg/L, ppm)					Daily Effluent Concentration (mg/L, ppm)				
	Day 1	Day 2	Day 3	Day 4	Day 5	Day 1	Day 2	Day 3	Day 4	Day 5
Molybdenum										
4806	1.15	1.15	1.27	0.592	1.16	1.44	0.639	0.501	0.665	0.371
4904	0.634	1.28	1.39	1.5	0.942	0.028	0.034	0.036	0.031	0.027
Tin										
4817	6.33	4.65	5.17	13.9	6.92	0.034	0.030	0.028	0.086	0.122
4834	CBI	CBI	CBI	CBI	CBI	0.59	0.57	0.72	1.37	0.82
Total Organic Carbon (TOC) (as indicator parameter)										
4737	CBI	CBI	CBI	CBI	CBI	75	106	71	108	71
4761	CBI	CBI	CBI	CBI	CBI	52	46	51	---	---
4762	CBI	CBI	CBI	CBI	CBI	172	180	147	182	172
4806	8.26	12.9	13.8	12.5	27.9	29.3	12.9	9.3	37.0	20.4
4807	20.2	26.3	17.4	17.3	24.1	16.2	23.6	27.4	10.2	8.91
4817	29.6	29.6	51.3	57.4	47.3	16.4	17.4	21.6	25.7	31.7
4833	26	41	73	10	22	10	12	34	10	10
4834	CBI	CBI	CBI	CBI	CBI	87.1	77.9	90.7	67.6	42
4871	174	102	149	206	124	117	87	117	91	101
4904	10	24	10	10	18	10	10	10	10	10
Cadmium										
1197A	---	1.49	0.271	---	---	---	0.08	0.06	---	---
4277	18.9	3.42	0.903	2.93	5.27	0.230	0.202	0.0779	0.140	0.219
4415	---	0.443	0.0358	0.0483	---	---	0.005	0.005	0.005	---
4460	0.068	0.347	0.141	---	---	0.021	0.049	0.035	---	---
6048	13.9	21.6	8.50	6.56	6.73	0.857	1.09	0.942	0.765	0.801
Chromium										
1197A	28.7	1.4	0.027	---	---	1.23	0.656	0.027	---	---
4011	CBI	CBI	CBI	CBI	CBI	0.756	0.726	1.13	---	---
4079	CBI	CBI	CBI	CBI	CBI	0.635	1.82	0.456	---	---
4310	CBI	CBI	CBI	CBI	CBI	0.395	1.77	4.65	---	—
4330	CBI	CBI	CBI	CBI	CBI	0.066	0.131	0.043	0.050	0.043
4384	CBI	CBI	CBI	CBI	CBI	0.593	0.603	0.785	0.411	0.532
4415	---	5.303	1.475	0.973	---	---	0.015	0.020	0.112	---
4417	5.10	3.31	3.56	2.77	1.57	0.0199	0.0133	0.0292	0.0098	0.0216

Table 10-6B (Continued)

Episode	Daily Influent Concentration (mg/L, ppm)					Daily Effluent Concentration (mg/L, ppm)				
	Day 1	Day 2	Day 3	Day 4	Day 5	Day 1	Day 2	Day 3	Day 4	Day 5
Chromium (continued)										
4438	28.1	---	---	17.4	19.3	0.099	---	---	0.091	0.088
4460	4.24	8.8	3.06	---	---	1.33	1.21	0.984	---	---
4470	CBI	CBI	CBI	CBI	CBI	0.0825	0.0555	0.0686	0.1083	0.0716
4811	CBI	CBI	CBI	CBI	CBI	0.008	0.008	0.008	0.010	0.009
4817	2.73	2.55	2.15	0.33	1.64	0.0576	0.314	0.0805	0.0217	0.2715
4833	8.85	19.1	18.1	62.2	37.4	0.0369	0.0281	0.0675	0.0891	0.118
4847	8.32	8.07	28.7	10.0	102	0.380	0.201	0.194	0.190	0.543
4871	1.54	0.82	0.41	1.57	0.515	0.01	0.01	0.01	0.01	0.01
4904	7.7	12.1	15.6	14.8	11.0	0.017	0.012	0.011	0.022	0.012
Copper										
4277	29.50	7.74	5.16	13.1	14.6	0.638	0.701	0.610	0.462	0.385
4737	CBI	CBI	CBI	CBI	CBI	0.507	0.235	0.022	0.040	0.073
4806	13.6	8.57	8.18	4.47	1.66	1.07	0.265	0.301	0.926	0.484
4807	29.5	27.7	23.0	22.4	23.5	1.31	1.43	1.36	0.71	0.426
4817	32.8	30.0	32.6	36.8	30.1	0.199	0.149	0.154	0.260	0.428
4833	0.402	1.48	2.91	3.70	2.63	0.110	0.127	0.098	0.131	0.175
4834	CBI	CBI	CBI	CBI	CBI	0.0519	0.0454	0.0477	0.0772	0.0796
4847	1.65	2.43	3.57	0.944	1.03	0.118	0.100	0.103	0.035	0.046
4904	157	251	251	273	224	0.037	0.040	0.031	0.049	0.073
Lead										
1197A	0.20	0.223	159	---	---	0.47	4.97	0.20	---	---
4761	CBI	CBI	CBI	CBI	CBI	0.012	0.012	0.012	---	---
4762	CBI	CBI	CBI	CBI	CBI	0.0248	0.0248	0.0248	0.0248	0.0248
4834	CBI	CBI	CBI	CBI	CBI	0.0256	0.016	0.0181	0.0186	0.0244
4871	1.47	1.95	1.04	1.80	1.12	0.0087	0.0130	0.011	0.0061	0.0083
Nickel										
1197A	0.082	6.29	0.071	---	---	0.209	1.390	1.390	---	---
4277	27.4	2.705	1.05	3.54	6.38	0.173	0.180	0.161	0.180	0.197
4438	34.2	---	---	32.4	31.7	0.378	---	---	0.518	0.348
4470	CBI	CBI	CBI	CBI	CBI	0.339	0.229	0.143	0.222	0.224
4761	CBI	CBI	CBI	CBI	CBI	0.319	0.254	0.225	---	---
4762	CBI	CBI	CBI	CBI	CBI	0.304	0.232	0.124	0.158	0.211
4807	6.56	5.73	6.67	6.90	5.95	0.287	0.354	0.319	0.220	0.138

Table 10-6B (Continued)

Episode	Daily Influent Concentration (mg/L, ppm)					Daily Effluent Concentration (mg/L, ppm)				
	Day 1	Day 2	Day 3	Day 4	Day 5	Day 1	Day 2	Day 3	Day 4	Day 5
4811	CBI	CBI	CBI	CBI	CBI	0.0160	0.057	0.063	0.018	0.037
Nickel (continued)										
4817	0.209	0.329	0.721	0.944	1.38	0.0209	0.0284	0.0282	0.0472	0.0473
4833	0.507	0.651	0.724	0.864	5.02	0.192	0.016	0.016	0.016	0.016
4834	CBI	CBI	CBI	CBI	CBI	0.212	0.216	0.310	0.430	0.484
4847	0.639	0.918	2.64	1.52	0.43	0.043	0.031	0.027	0.061	0.110
4871	8.97	8.48	4.70	10.3	6.11	0.697	0.620	0.602	0.536	0.802
4904	6.60	11.4	10.8	12.4	8.99	0.026	0.026	0.026	0.026	0.026
6048	0.718	22.4	4.56	8.95	21.2	0.135	0.518	0.270	0.284	0.525
Silver										
1197A	0.005	3.2	0.029	---	---	0.559	0.430	0.029	---	---
4277	4.230	0.138	0.0165	0.121	0.303	0.005	0.005	0.010	0.005	0.027
4807	0.999	1.670	1.010	0.683	0.923	0.0202	0.0472	0.0701	0.0006	0.0218
4817	0.910	0.793	1.040	0.946	0.548	0.0160	0.0782	0.051	0.0613	0.1025
Zinc										
1197A	---	0.153	0.062	---	---	---	0.041	0.020	---	---
4277	3.48	1.335	0.925	0.801	2.64	0.0218	0.0469	0.0416	0.0126	0.0153
4415	---	2.303	1.923	3.012	---	---	0.070	0.058	0.541	---
4417	142	66.1	45.9	4.55	19.9	0.15	0.213	0.173	0.0778	0.212
4470	CBI	CBI	CBI	CBI	CBI	1.596	0.98	1.35	1.18	1.792
4737	CBI	CBI	CBI	CBI	CBI	0.0655	0.0882	0.386	0.0557	0.0926
4761	CBI	CBI	CBI	CBI	CBI	0.136	0.140	0.2015	---	---
4762	CBI	CBI	CBI	CBI	CBI	0.269	0.175	0.173	0.163	0.224
4807	4.13	3.97	4.19	3.56	3.02	0.137	0.165	0.194	0.097	0.051
4811	CBI	CBI	CBI	CBI	CBI	0.0521	0.0556	0.0629	0.0473	0.0468
4817	57.6	55.5	30.6	51.5	23.4	0.447	0.300	0.196	0.411	0.309
4871	32	25.7	13	34.9	17.5	0.203	0.215	0.139	0.126	0.141
4904	3.91	6.21	4.62	4.21	3.03	0.015	0.018	0.015	0.015	0.015

[a]Pollutants not detected in an effluent sample are reported at the detection limit. In these cases, concentrations at influent to treatment were determined to be at treatable concentrations (see Section 10.2).
[b]The Steel Forming and Finishing Subcategory has mass-based limits, which are being proposed based on the General Metals Subcategory concentration-based limits. Section 14.0 provides the mass-based limits for the Steel Forming and Finishing Subcategory and methodology for deriving the limits.
--- No samples collected on this day.
CBI - Confidential Business Information.

Table 10-6C

MP&M Technology Effectiveness Concentrations for General Metals and Steel Forming and Finishing Subcategory (Option 4)[a,b]

Episode	Daily Influent Concentration (mg/L, ppm)					Daily Effluent Concentration (mg/L, ppm)				
	Day 1	Day 2	Day 3	Day 4	Day 5	Day 1	Day 2	Day 3	Day 4	Day 5
Cadmium										
4882	3.59	4.52	3.82	3.18	1.27	0.0072	0.005	0.0056	0.0073	0.0102
Chromium										
4807	0.71	0.164	0.51	0.412	1.24	0.085	0.0154	0.0368	0.0248	0.017
4854	CBI	CBI	CBI	CBI	CBI	0.0098	0.0119	0.0170	0.0142	0.017
4882	35.3	23.0	25.4	24.1	11.0	0.0159	0.0330	0.0867	0.0954	0.468
Copper										
4807	17.2	9.71	26.6	20.7	89.8	0.127	0.0416	0.0418	0.0663	0.0929
4854	CBI	CBI	CBI	CBI	CBI	0.008	0.008	0.034	0.330	0.0394
4882	1.5	0.74	0.432	0.372	0.219	0.0660	0.0205	0.0168	0.0124	0.0126
Manganese										
4807	4.78	1.16	4.19	1.51	5.95	0.117	0.132	0.162	0.171	0.067
Nickel										
4807	29.0	5.06	12.3	6.94	30.9	1.58	0.48	0.55	0.54	0.60
4854	CBI	CBI	CBI	CBI	CBI	0.022	0.016	0.017	0.016	0.101
Silver										
4807	3.13	1.79	3.39	1.92	2.48	0.0184	0.0006	0.0331	0.0252	0.0006
Tin										
4807	0.394	1.74	2.17	0.60	1.29	0.0184	0.0184	0.0184	0.0184	0.0184
Zinc										
4807	9.01	3.01	7.91	4.39	13.4	0.0576	0.0584	0.0398	0.0452	0.0002
4854	CBI	CBI	CBI	CBI	CBI	0.008	0.017	0.020	0.008	0.008
4882	34.8	44.6	37.8	32.7	14.0	0.028	0.029	0.067	0.046	0.011
Total Suspended Solids (TSS)										
4807	3080	152	2380	380	2920	30.0	17.0	23.0	13.0	27.0
4882	33	61	76	---	22	4.5	4.0	4.0	4.0	4.0

[a]Pollutants not detected in an effluent sample are reported at the detection limit. In these cases, concentrations at influent to treatment were determined to be at treatable concentrations (see Section 10.2).
[b]The Steel Forming and Finishing Subcategory has mass-based limits, which are being proposed based on the General Metals Subcategory concentration-based limits. Section 14.0 provides the mass-based limits for the Steel Forming and Finishing Subcategory and methodology for deriving the limits.
--- No samples collected on this day.
CBI - Confidential Business Information.

Table 10-6D

MP&M Technology Effectiveness Concentrations for Metal Finishing Job Shops Subcategory (Option 2)[a]

Episode	Daily Influent Concentration (mg/L, ppm)					Daily Effluent Concentration (mg/L, ppm)				
	Day 1	Day 2	Day 3	Day 4	Day 5	Day 1	Day 2	Day 3	Day 4	Day 5
Total Suspended Solids (TSS)										
4788	175.2	97.6	86.8	103.2	708.8	13.0	21.0	12.0	6.5	9.0
6178	250.5	534	170.5	---	---	16	43	10	---	---
6187	6266.5	6307.5	8532.5	---	---	10.5	12.0	11.0	---	---
Manganese										
4278	CBI	CBI	CBI	CBI	CBI	0.181	0.166	0.115	0.172	---
4279	2.176	1.033	1.236	0.620	5.713	0.035	0.093	0.076	0.007	0.195
6178	0.5005	1.6975	1.7425	---	---	0.0127	0.0216	0.0167	---	---
6187	9.4873	17.312	47.339	---	---	0.0043	0.0036	0.0064	---	---
Tin										
4788	50.95	36.51	63.67	52.71	75.34	1.08	0.94	1.36	1.46	1.22
Total Organic Carbon (TOC) (as indicator parameter)										
4788	36.4	37.0	57.6	39.6	46.4	48.0	42.0	68.5	50.5	43.0
Cadmium										
4279	7.6391	2.6358	2.4367	1.4307	7.7302	0.0864	0.1756	0.2105	0.0222	0.1896
4788	1.3988	3.436	1.9368	2.1336	11.5484	0.0118	0.0427	0.0225	0.0105	0.0198
6178	2.9685	0.9908	1.6622	---	---	0.041	0.035	0.029	---	---
6187	63.935	117.034	322.825	---	---	0.0286	0.0707	0.0661	---	---
Chromium										
4278	CBI	CBI	CBI	CBI	CBI	0.019	0.007	0.007	0.033	---
4279	22.559	11.269	9.668	7.609	10.352	0.364	0.507	0.576	0.180	0.834
4788	5.568	8.062	13.198	11.907	10.887	0.336	0.188	0.475	0.236	0.05
4893	0.269	1.82	---	---	---	0.126	0.382	---	---	---
6178	1.084	1.82	4.365	---	---	0.141	0.282	0.626	---	---
6187	14.358	31.745	93.393	---	---	0.169	0.478	0.396	---	---
Copper										
4278	CBI	CBI	CBI	CBI	CBI	0.035	0.329	0.087	0.061	---
4279	3.663	1.8121	1.1632	0.9302	2.1929	0.0990	0.1235	0.1748	0.0344	0.0929
4883	0.998	1.160	1.06	0.645	1.04	0.176	0.596	0.358	0.407	0.304
4894	0.904	1.14	---	---	---	0.463	0.253	---	---	---

Table 10-6D (Continued)

Episode	Daily Influent Concentration (mg/L, ppm)					Daily Effluent Concentration (mg/L, ppm)				
	Day 1	Day 2	Day 3	Day 4	Day 5	Day 1	Day 2	Day 3	Day 4	Day 5
Copper (continued)										
6178	5.74	23.875	17.0	---	---	0.221	0.653	0.439	---	---
6187	122.18	201.475	344.128	---	---	0.420	0.208	0.277	---	---
Lead										
4788	8.314	8.074	9.726	11.084	16.168	0.165	0.127	0.152	0.244	0.196
6178	2.840	13.595	19.643	---	---	0.035	0.070	0.055	---	---
6187	36.585	72.053	74.443	---	---	0.084	0.044	0.075	---	---
Nickel										
4278	CBI	CBI	CBI	CBI	CBI	0.318	0.157	0.317	0.596	---
4279	7.141	3.847	2.619	3.537	13.153	0.477	0.481	0.363	0.058	0.527
4788	21.267	13.464	16.572	15.403	53.733	0.690	0.790	0.748	0.679	0.342
4883	2.05	0.786	3.36	1.99	0.605	0.315	0.205	0.534	0.465	0.182
4894	1.71	1.12	---	---	---	0.305	0.233	---	---	---
Silver										
4788	0.3122	0.4425	0.1738	0.2374	1.4206	0.0296	0.0296	0.0068	0.005	0.0196
6178	0.2425	1.6425	2.0275	---	---	0.035	0.010	1.080	---	---
6187	0.9715	0.8013	1.146	---	---	0.043	0.033	0.020	---	---
Zinc										
4278	CBI	CBI	CBI	CBI	CBI	0.022	0.027	0.011	0.011	---
4279	93.67	40.33	34.26	44.99	100.47	1.23	3.53	2.06	0.263	2.87
4788	1.099	2.074	1.610	1.260	4.907	0.011	0.032	0.024	0.011	0.013
4883	0.996	1.13	0.837	1.10	0.592	0.177	0.269	0.230	0.322	0.164
4893	0.292	1.67	---	---	---	0.087	0.352	---	---	---
4894	0.532	1.40	---	---	---	0.114	0.255	---	---	---
6178	1.3842	0.813	0.9343	---	---	0.0463	0.0169	0.0161	---	---
6187	19.2285	69.7393	175.9742	---	---	0.0177	0.0162	0.0221	---	—

[a]Pollutants not detected in an effluent sample are reported at the detection limit. In these cases, concentrations at influent to treatment were determined to be at treatable concentrations (see Section 10.2). Section 14.0 provides the mass-based limits for the Steel Forming and Finishing Subcategory and methodology for deriving the limits.
--- No samples collected on this day.
CBI - Confidential Business Information.

Table 10-6E

MP&M Technology Effectiveness Concentrations for Nonchromium Anodizers Subcategory (Option 2)[a]

Episode	Daily Influent Concentration (mg/L, ppm)					Daily Effluent Concentration (mg/L, ppm)				
	Day 1	Day 2	Day 3	Day 4	Day 5	Day 1	Day 2	Day 3	Day 4	Day 5
Total Suspended Solids (TSS)										
4856	CBI	CBI	CBI	CBI	CBI	7.0	6.0	6.0	8.0	11.0
4869	502	21	9	46	---	4.0	12.0	10.0	52.0	4.0
Aluminum										
4856	CBI	CBI	CBI	CBI	CBI	2.91	2.23	3.04	3.4	5.29
4869	132	14.8	16.1	8.24	---	1.08	0.64	1.14	4.65	0.80

[a]Pollutants not detected in an effluent sample are reported at the detection limit. In these cases, concentrations at influent to treatment were determined to be at treatable concentrations (see Section 10.2).
--- No samples collected on this day.
CBI - Confidential Business Information.

Table 10-6F

MP&M Technology Effectiveness Concentrations for Printed Wiring Boards Subcategory (Option 2)[a]

Episode	Daily Influent Concentration (mg/L, ppm)					Daily Effluent Concentration (mg/L, ppm)				
	Day 1	Day 2	Day 3	Day 4	Day 5	Day 1	Day 2	Day 3	Day 4	Day 5
Manganese										
4866	0.385	0.574	0.860	1.940	1.070	0.212	0.235	0.289	0.666	0.641
Nickel										
4866	2.5	0.499	0.325	0.449	0.279	0.121	0.148	0.091	0.107	0.090
4867	0.0388	0.029	2.30	0.372	0.505	0.017	0.016	0.126	0.019	0.067
Tin										
4866	6.74	3.89	5.07	4.11	4.92	0.051	0.141	0.082	0.097	0.229
4867	3.26	5.13	2.65	1.61	1.71	0.025	0.093	0.016	0.014	0.039
Total Organic Carbon (TOC) (as indicator parameter)										
4866	11.2	22.1	17.7	62.0	16.6	11.0	17.7	16.5	35.6	13.8
4867	87.6	152	116	86.3	108	70.7	86.1	99.7	84.4	88.4

[a]Pollutants not detected in an effluent sample are reported at the detection limit. In these cases, concentrations at influent to treatment were determined to be at treatable concentrations (see Section 10.2).
--- No samples collected on this day.
CBI - Confidential Business Information.

Table 10-6G

MP&M Technology Effectiveness Concentrations for Printed Wiring Boards Subcategory (Option 4)[a]

Episode	Daily Influent Concentration (mg/L, ppm)					Daily Effluent Concentration (mg/L, ppm)				
	Day 1	Day 2	Day 3	Day 4	Day 5	Day 1	Day 2	Day 3	Day 4	Day 5
Copper										
4855	19.4	48.8	38.6	16.9	33.9	0.0018	0.0018	0.0018	0.0018	0.0081
Lead										
4855	3.1	2.61	2.38	2.18	1.75	0.021	0.021	0.021	0.021	0.021
Tin										
4855	6.94	5.77	4.48	4.35	2.97	0.0403	0.0718	0.0548	0.0549	0.0517

[a]Pollutants not detected in an effluent sample are reported at the detection limit. In these cases, concentrations at influent to treatment were determined to be at treatable concentrations (see Section 10.2).
--- No samples collected on this day.
CBI - Confidential Business Information.

Table 10-6H

MP&M Technology Effectiveness Concentrations for Oily Wastes Subcategory (Option 6)[a]

Episode	Daily Influent Concentration (mg/L, ppm)					Daily Effluent Concentration (mg/L, ppm)				
	Day 1	Day 2	Day 3	Day 4	Day 5	Day 1	Day 2	Day 3	Day 4	Day 5
Oil and Grease (as HEM)										
4851	6883.8	16642	379.5	7569.7	334	14.9	18.3	15.4	14.2	12.1
4872	696.0	2182.5	502.0	---	---	52.0	44.8	55.6	---	---
4876	2030	2230	1760	1110	3440	25.6	24.7	105	54.7	188
4877	556.5	1937.5	996.7	544.3	469	24.0	63.75	14.75	21.25	15.0
Total Sulfide (as S)										
4877	14.0	5.0	4.0	14.0	17.0	4.5	8.0	3.0	17.0	3.0
Total Suspended Solids (TSS)										
4471	96	82	77	98	---	100	40	36	6	---
4851	1720	508	373	615	71	40	35	49	48	34
4872	244	242	165	---	---	12.5	10.0	13.0	---	---
4876	1670	833	1580	84	620	18	15	20	10	12
4877	90	275	162	303	241	17	62	26	14	21

Table 10-6H (Continued)

Episode	Daily Influent Concentration (mg/L, ppm)					Daily Effluent Concentration (mg/L, ppm)				
	Day 1	Day 2	Day 3	Day 4	Day 5	Day 1	Day 2	Day 3	Day 4	Day 5
Total Organic Carbon (TOC) (as indicator parameter)										
4851	1520	517	280	216	232	202.0	254.5	299.5	480.0	240.0
4872	1340	963	797	---	---	173.5	131	260	---	---
Total Organic Carbon (TOC) (as indicator parameter) - (continued)										
4876	928	1090	1690	1120	1650	493	313	1110	605	1270
4877	659	158	289	569	282	269	206.5	264	329	269

[a]Pollutants not detected in an effluent sample are reported at the detection limit. In these cases, concentrations at influent to treatment were determined to be at treatable concentrations (see Section 10.2).
--- No samples collected on this day.
CBI - Confidential Business Information.

Table 10-6I

MP&M Technology Effectiveness Concentrations for Railroad Line Maintenance Subcategory (Option 10)[a]

Episode	Daily Influent Concentration (mg/L, ppm)					Daily Effluent Concentration (mg/L, ppm)				
	Day 1	Day 2	Day 3	Day 4	Day 5	Day 1	Day 2	Day 3	Day 4	Day 5
Biochemical Oxygen Demand (BOD) 5-Day (Carbonaceous)										
6179	114	94	256	---	---	4.5	5.0	6.0	---	---
Oil and Grease (as HEM)										
6179	255.5	250.7	268	---	---	6.7	6.7	5.3	---	---
Total Suspended Solids (TSS)										
6179	122	155	339	---	---	14.5	8.5	9.0	---	---

[a]Pollutants not detected in an effluent sample are reported at the detection limit. In these cases, concentrations at influent to treatment were determined to be at treatable concentrations (see Section 10.2).
--- No samples collected on this day.
CBI - Confidential Business Information.

Table 10-6J

MP&M Technology Effectiveness Concentrations for Shipbuilding and Drydock Subcategory (Option 10)[a]

Episode	Daily Influent Concentration (mg/L, ppm)					Daily Effluent Concentration (mg/L, ppm)				
	Day 1	Day 2	Day 3	Day 4	Day 5	Day 1	Day 2	Day 3	Day 4	Day 5
Oil and Grease (as HEM)										
4891	CBI	CBI	CBI	CBI	CBI	5.6	5.5	8.3	5.3	6.3
4892	180.3	206.8	595.5	661.3	1823	9.3	8.5	12.0	11.7	17.2
Total Suspended Solids (TSS)										
4805	1070	9	---	---	---	38	21	---	---	—
4891	CBI	CBI	CBI	CBI	CBI	17	11	5	18	7
4892	39	47	50	88	221	37.5	41	44.5	50	102

[a]Pollutants not detected in an effluent sample are reported at the detection limit. In these cases, concentrations at influent to treatment were determined to be at treatable concentrations (see Section 10.2).
--- No samples collected on this day.
CBI - Confidential Business Information.

Table 10-7

Calculation of Total Organics Parameter (TOP) Limit

Total Organics Parameter Pollutants that are also POCs	CAS Number	Nominal Quantitation Limit (mg/L)	Pollutant has data in the LTA database for Option 2[a]
Acrolein	107-02-8	0.05	
Benzoic acid	65-85-0	0.05	x
Carbon disulfide	75-15-0	0.01	x
Dibenzofuran	132-64-9	0.01	
Dibenzothiophene	132-65-0	0.01	x
Isophorone	78-59-1	0.01	
n-Hexadecane	544-76-3	0.01	x
n-Tetradecane	929-59-4	0.01	x
Aniline	62-53-3	0.01	
Chloroform (trichloromethane)	67-66-3	0.01	x
Methylene chloride (dichloromethane)	75-09-2	0.01	
Chloroethane (ethyl chloride)	75-00-3	0.05	
1,1-Dichloroethane	75-34-3	0.01	
1,1,1-Trichloroethane (methylchloroform)	71-55-6	0.01	
1,1-Dichloroethylene (vinylidene chloride)	75-35-4	0.01	x
Tetrachloroethylene (perchloroethylene)	127-18-4	0.01	
Trichloroethylene	79-01-6	0.01	
Biphenyl	92-52-4	0.01	x
p-Cymene	99-87-6	0.01	x
Ethylbenzene	100-41-4	0.01	x
Toluene	108-88-3	0.01	x
N-Nitrosodimethylamine	62-75-9	0.05	
N-Nitrosodiphenylamine	86-30-6	0.02	
Chlorobenzene	108-90-7	0.01	
2,6-Dinitrotoluene	606-20-2	0.01	
Phenol	108-95-2	0.01	
4-Chloro-*m*-cresol (*para*chloro*meta*cresol or 4-chloro-3- methylphenol)	59-50-7	0.01	x
2,4-Dinitrophenol	51-28-5	0.05	
2,4-Dimethylphenol	105-67-9	0.01	
2-Nitrophenol (*o*-nitrophenol)	88-75-5	0.02	
4-Nitrophenol (*p*-nitrophenol)	100-02-7	0.05	

Table 10-7 (Continued)

Total Organics Parameter Pollutants that are also POCs	CAS Number	Nominal Quantitation Limit (mg/L)	Pollutant has data in the LTA database for Option 2[a]
Acenaphthene	83-32-9	0.01	x
Anthracene	120-12-7	0.01	
3,6-Dimethylphenanthrene	1576-67-6	0.01	x
Fluorene	86-73-7	0.01	x
Fluoranthene	206-44-0	0.01	
2-Isopropylnaphthalene	2027-17-0	0.01	x
1-Methylfluorene	1730-37-6	0.01	x
2-Methylnaphthalene	91-57-6	0.01	x
1-Methylphenanthrene	832-69-9	0.01	x
Naphthalene	91-20-3	0.01	x
Phenanthrene	85-01-8	0.01	x
Pyrene	129-00-0	0.01	x
Benzyl butyl phthalate	85-68-7	0.01	
Dimethyl phthalate	131-11-3	0.01	
Di-n-butyl phthalate	84-74-2	0.01	
Di-n-octyl phthalate	117-84-0	0.01	
Di(2-ethylhexyl) phthalate	117-81-7	0.01	x
Sum of nominal quantitation limits for pollutants that are not in the LTA database			0.47

[a] x indicates that the pollutant has data in the LTA database for Option 2.

Table 10-8A

Episode-Level Long-Term Averages and Variability Factors for Total and Amenable Cyanide Destruction (All Options for Applicable Subcategories)[a]

Regulated Pollutant	Subcategory	Episode	Long-Term Average Concentration (mg/L, ppm)	1-Day Variability Factor	4-Day Variability Factor
Total Cyanide	General Metals	4274	0.01	---	---
	Metal Finishing Job Shop	4279	0.01	---	---
	General Metals	4384	0.77	1.94	1.27
	General Metals	4460A	0.02	---	---
	General Metals	4807	0.027	2.60	1.41
	General Metals	4817	0.443	2.18	1.60
	Metal Finishing Job Shop	4828	0.092	2.80	1.48
	General Metals	4834	0.02	---	---
	General Metals	4847	0.012	2.63	1.39
	Shipbuilding and Drydock	4891	0.088	2.92	1.51
	General Metals	4904	0.257	2.74	1.47
	General Metals	6048	0.207	1.66	1.20
	Metal Finishing Job Shop	6186	0.196	1.67	1.20
Amenable Cyanide	General Metals	4807	0.02	---	---
	General Metals	4817	0.54	1.83	1.37
	Metal Finishing Job Shop	4828	0.064	4.20	1.79
	General Metals	4834	0.020	---	---
	General Metals	4847	0.010	---	---
	General Metals	4904	0.119	2.14	1.33
	General Metals	6048	0.016	3.70	1.76
	Metal Finishing Job Shop	6186	0.0618	5.12	1.99

[a]Data used for limits for General Metals, Metal Finishing Job Shops, Printed Wiring Board, and Steel Forming and Finishing Subcategories.

Table 10-8B

Episode-Level Long-Term Averages and Variability Factors for General Metals and Steel Forming and Finishing Subcategories (Option 2) [a]

Regulated Pollutant	Episode	Long-Term Average Concentration[b] (mg/L, ppm)	1-Day Variability Factor	4-Day Variability Factor
Manganese	4762	0.139	1.64	1.20
	4807	0.050	2.08	1.31
	4871	0.092	1.35	1.11
	4904	0.013	2.22	1.35
Molybdenum	4806	0.723	2.84	1.49
	4904	0.031	1.32	1.11
Tin	4817	0.060	3.85	1.72
	4834	0.815	2.14	1.32
Total Organic Carbon (TOC) (as indicator parameter)	4737	86.5	1.61	1.19
	4761	49.7	---	---
	4762	170.6	1.22	1.07
	4806	21.8	3.20	1.57
	4807	17.3	2.80	1.48
	4817	22.6	1.82	1.24
	4833	15.2	5.15	1.95
	4834	73.1	1.97	1.28
	4871	102.6	1.37	1.12
	4904	10.0	---	---
Cadmium	1197A	0.0705	---	---
	4277	0.174	2.59	1.43
	4415	0.0052	---	---
	4460	0.0349	---	---
	6048	0.891	1.37	1.12
Chromium	1197A	0.638	---	---
	4011	0.871	---	---
	4079	0.970	---	---
	4310	2.272	---	---
	4330	0.067	2.65	1.45
	4384	0.585	1.68	1.21
	4415	0.0488	---	---

Table 10-8B (Continued)

Regulated Pollutant	Episode	Long-Term Average Concentration[b] (mg/L, ppm)	1-Day Variability Factor	4-Day Variability Factor
Chromium (continued)	4417	0.0188	2.47	1.41
	4438	0.093	---	---
	4460	1.175	---	---
	4470	0.0773	1.73	1.22
	4811	0.0085	1.19	1.07
	4817	0.0925	6.02	2.19
	4833	0.0679	3.37	1.61
	4847	0.301	2.73	1.46
	4871	0.0101	---	---
	4904	0.0147	1.91	1.27
Copper	4277	0.559	1.73	1.22
	4737	0.175	8.73	2.82
	4806	0.609	3.58	1.66
	4807	1.049	2.98	1.52
	4817	0.238	2.50	1.41
	4833	0.128	1.63	1.19
	4834	0.060	1.81	1.24
	4847	0.080	3.05	1.54
	4904	0.046	2.03	1.30
Lead	1197A	1.88	---	---
	4761	0.012	---	---
	4762	0.025	---	---
	4834	0.020	1.55	1.18
	4871	0.009	1.88	1.26
Nickel	1197A	0.557	---	---
	4277	0.178	1.18	1.06
	4438	0.415	---	---
	4470	0.231	1.95	1.28
	4761	0.266	---	---
	4762	0.206	2.11	1.32
	4807	0.264	2.24	1.35
	4811	0.047	1.93	1.36
	4817	0.034	2.16	1.33
	4833	0.051	---	---
	4834	0.330	2.26	1.35
	4847	0.054	3.16	1.56
	4871	0.652	1.41	1.13
	4904	0.026	----	----
	6048	0.346	3.15	1.56

Table 10-8B (Continued)

Regulated Pollutant	Episode	Long-Term Average Concentration[b] (mg/L, ppm)	1-Day Variability Factor	4-Day Variability Factor
Silver	1197A	0.339	----	---
	4277	0.010	5.89	2.13
	4807	0.032	4.02	1.84
	4817	0.062	4.08	1.76
Zinc	1197A	0.030	---	---
	4277	0.028	3.30	1.59
	4415	0.223	---	---
	4417	0.165	2.41	1.39
	4470	1.381	1.69	1.21
	4737	0.137	4.45	1.84
	4761	0.159	---	---
	4762	0.201	1.60	1.19
	4807	0.129	3.00	1.53
	4811	0.053	1.32	1.10
	4817	0.333	2.02	1.29
	4871	0.165	1.71	1.22
	4904	0.016	---	—
Oil and Grease (as HEM)	4737	13.6	1.51	1.16
	4871	6.1	---	---
Total Suspended Solids (TSS)	1197A	26.7	---	---
	4011	26.7	---	---
	4079	6.3	---	---
	4277	14.4	1.62	1.19
	4384	45.6	2.52	1.42
	4415	1.0	---	---
	4417	7.0	3.11	1.60
	4438	6.7	---	----
	4470	17.7	2.87	1.50
	4737	24.0	2.84	1.49
	4761	22.0	---	---
	4762	14.4	1.27	1.09
	4807	8.3	2.67	1.47
	4811	4.0	---	---
	4817	11.8	3.54	1.67

Table 10-8B (Continued)

Regulated Pollutant	Episode	Long-Term Average Concentration[b] (mg/L, ppm)	1-Day Variability Factor	4-Day Variability Factor
Total Suspended Solids (TSS) (continued)	4833	8.4	2.74	1.47
	4834	14.6	7.06	2.40
	4871	5.8	2.00	1.29
	4904	5.7	2.33	1.37
Total Sulfides (as S)[c]	4877	7.1	4.25	1.80
Total Cyanide	(d)	(d)	(d)	(d)
Amenable Cyanide	(d)	(d)	(d)	(d)

[a]The Steel Forming and Finishing Subcategory has mass-based limits, which are being proposed based on the General Metals Subcategory concentration-based limits. Section 14.0 provides the mass-based limits for the Steel Forming and Finishing Subcategory and methodology for driving the limits.
[b]Concentrations for pollutants not detected in a sample are reported at the detection limit. In these cases, the detection limit was used to calculate the LTAs and variability factors.
[c]Data transfer from Oily Wastes Subcategory.
[d]See Table 10-8A, Total and Amenable Cyanide.
--- Not calculated due to insufficient data.
CBI - Confidential Business Information.

Table 10-8C

Episode-Level Long-Term Averages and Variability Factors for General Metals and Steel Forming and Finishing Subcategories (Option 4)[a]

Regulated Pollutant	Episode	Long-Term Average Concentration[b] (mg/L, ppm)	1-Day Variability Factor	4-Day Variability Factor
Cadmium	4882	0.007	1.81	1.25
Chromium	4807	0.036	3.95	1.74
	4854	0.014	1.69	1.21
	4882	0.140	8.61	2.80
Copper	4807	0.074	2.78	1.48
	4854	0.084	10.79	3.16
	4882	0.026	3.91	1.73
Manganese	4807	0.130	2.21	1.34
Nickel	4807	0.751	2.75	1.47
	4854	0.034	6.80	2.33
Silver	4807	0.016	2.94	1.79
Tin	4807	0.018	---	---
	4855	---	1.58[c]	1.18[c]
Zinc	4807	0.040	1.87	1.49
	4854	0.012	1.84	1.36
	4882	0.036	2.70	1.52
Total Suspended Solids (TSS)	4807	22.0	2.10	1.31
	4882	4.1	---	---
Total Organic Carbon (TOC) (as indicator parameter)[d]	4737	86.5	1.61	1.19
	4761	49.7	---	---
	4762	170.6	1.22	1.07
	4806	21.8	3.20	1.57
	4807	17.3	2.80	1.48
	4817	22.6	1.82	1.24
	4833	15.2	5.15	1.95
	4834	73.1	1.97	1.28
	4871	102.6	1.37	1.12
	4904	10.0	---	---
Lead[c]	4855	0.021	---	---
Oil and Grease (as HEM)[d]	4737	13.6	1.51	1.16
	4871	6.136	---	---
Molybdenum[d]	4806	0.723	2.84	1.49

Table 10-8C (Continued)

Regulated Pollutant	Episode	Long-Term Average Concentration[b] (mg/L, ppm)	1-Day Variability Factor	4-Day Variability Factor
	4904	0.031	1.32	1.11
Total Sulfide[e]	4877	7.1	4.25	1.80
Amenable Cyanide	(f)	(f)	(f)	(f)
Total Cyanide	(f)	(f)	(f)	(f)

[a]The Steel Forming and Finishing Subcategory has mass-based limits, which are being proposed based on the General Metals Subcategory concentration-based limits. Section 14.0 provides the mass-based limits for the Steel Forming and Finishing Subcategory and methodology for driving the limits.
[b]Concentrations for pollutants not detected in a sample are reported at the detection limit. In these cases, the detection limit was used to calculate the LTAs and variability factors.
[c]Data transfer from Printed Wiring Board Subcategory Option 4.
[d]Data transfer from General Metals Subcategory Option 2.
[e]Data transfer from Oily Wastes Subcategory.
[f]See Table 10-8A, Total and Amenable Cyanide.
--- Not calculated due to insufficient data.
CBI - Confidential Business Information.

Table 10-8D

Episode-Level Long-Term Averages and Variability Factors for Metal Finishing Job Shops Subcategory (Option 2)

Regulated Pollutant	Episode	Long-Term Average Concentration[a] (mg/L, ppm)	1-Day Variability Factor	4-Day Variability Factor
Manganese	4278	0.158	1.58	1.18
	4279	0.081	8.27	2.71
	6178	0.017	---	---
	6187	0.005	---	---
Tin	4788	1.213	1.49	1.15
Total Organic Carbon (TOC) (as indicator parameter)	4788	50.4	1.55	1.17
Cadmium	4279	0.137	5.75	2.13
	4788	0.021	3.16	1.56
	6178	0.035	---	---
	6187	0.055	---	---
Chromium	4278	0.016	4.45	1.85
	4279	0.492	3.25	1.58
	4788	0.257	5.12	1.99
	4893	0.254	---	---
	6178	0.350	---	---
	6187	0.348	---	---
Copper	4278	0.128	5.79	2.14
	4279	0.105	3.41	1.62
	4883	0.368	2.56	1.42
	4894	0.358	---	---
	6178	0.438	---	---
	6187	0.302	---	---
Lead	4788	0.177	1.73	1.22
	6178	0.053	---	---
	6187	0.068	---	---
Silver	4788	0.0181	4.42	1.86
	6178	0.3750	---	---
	6187	0.0323	---	---

Table 10-8D (Continued)

Regulated Pollutant	Episode	Long-Term Average Concentration[a] (mg/L, ppm)	1-Day Variability Factor	4-Day Variability Factor
Zinc	4278	0.0178	1.82	1.35
	4279	1.989	6.54	2.31
	4788	0.018	2.76	1.47
	4883	0.232	1.85	1.25
	4893	0.220	---	---
	4894	0.185	---	---
	6178	0.026	---	---
	6187	0.019	---	---
Molybdenum[b]	4806	0.723	2.84	1.49
	4904	0.031	1.32	1.11
Nickel	4278	0.070	4.36	1.83
	4279	0.381	5.68	2.12
	4788	0.650	2.09	1.31
	4883	0.340	2.71	1.46
	4894	0.269	---	---
Total Organic Carbon (TOC) (as indicator parameter)	4788	50.4	1.55	1.17
Total Sulfide[c]	4877	7.1	4.25	1.80
Total Cyanide	(d)	(d)	(d)	(d)
Amenable Cyanide	(d)	(d)	(d)	(d)

[a] Concentrations for pollutants not detected in a sample are reported at the detection limit. In these cases, the detection limit was used to calculate the LTAs and variability factors.
[b] Data transfer from General Metals Subcategory Option 2.
[c] Data transfer from Oily Wastes Subcategory.
[d] See first table under Table 10-8A, Total and Amenable Cyanide.
--- Not calculated due to insufficient data.
CBI - Confidential Business Information.

Table 10-8E

Episode-Level Long-Term Averages and Variability Factors for Metal Finishing Job Shops (Option 4)

Regulated Pollutant	Episode	Long-Term Average Concentration[a] (mg/L, ppm)	1-Day Variability Factor	4-Day Variability Factor
Total Suspended Solids[b]	4807	22.0	2.10	1.31
	4882	4.10	---	---
Manganese[b]	4807	0.130	2.21	1.34
Tin	4807 (a)	0.018	---	---
	4855 (c)	---	1.58	1.18
Total Organic Carbon (TOC) (as indicator parameter)	4788	50.4	1.55	1.17
Cadmium	4882	0.007	1.8	1.25
Chromium[b]	4807	0.036	3.95	1.74
	4854	0.014	1.69	1.21
	4882	0.140	8.61	2.80
Copper[b]	4807	0.074	2.78	1.48
	4854	0.084	10.79	3.16
	4882	0.026	3.91	1.73
Lead[d]	4855	0.021	---	---
Silver[b]	4807	0.016	2.94	1.79
Zinc[b]	4807	0.040	1.87	1.49
	4854	0.012	1.84	1.36
	4882	0.036	2.70	1.52
Oil and Grease (as HEM)[c]	4737	13.6	1.51	1.16
	4871	6.14	---	---
Molybdenum[c]	4806	0.031	2.84	1.49
	4904	0.315	1.32	1.11
Nickel[b]	4807	0.751	2.75	1.47
	4854	0.034	6.80	2.33
Total Organic Carbon (TOC) (as indicator parameter)	4788	50.4	1.55	1.17

Table 10-8E (Continued)

Regulated Pollutant	Episode	Long-Term Average Concentration[a] (mg/L, ppm)	1-Day Variability Factor	4-Day Variability Factor
Total Sulfide (e)	4877	7.1	4.25	1.80
Total Cyanide	(f)	(f)	(f)	(f)
Amenable Cyanide	(f)	(f)	(f)	(f)

[a] Concentrations for pollutants not detected in a sample are reported at the detection limit. In these cases, the detection limit was used to calculate the LTAs and variability factors.
[b] Data transfer from General Metals Subcategory Option 4.
[c] Data transfer from General Metals Subcategory Option 2.
[d] Data transfer from Printed Wiring Board Subcategory Option 4.
[e] Data transfer from Oily Wastes Subcategory.
[f] See Table 10-8A, Total and Amenable Cyanide.
--- Not calculated due to insufficient data.
CBI - Confidential Business Information.

Table 10-8F

Episode-Level Long-Term Averages and Variability Factors for Nonchromium Anodizing Subcategory (Option 2)

Regulated Pollutant	Episode	Long-Term Average Concentration[a] (mg/L, ppm)	1-Day Variability Factor	4-Day Variability Factor
Total Suspended Solids (TSS)	4856	7.6	1.74	1.22
	4869	16.4	6.92	2.38
Aluminum	4856	3.374	1.98	1.29
	4869	1.663	4.48	1.85
Manganese[b]	4762	0.139	1.64	1.20
	4807	0.050	2.08	1.31
	4871	0.092	1.35	1.11
	4904	0.013	2.22	1.35
Nickel[b]	1197A	0.557	---	---
	4277	0.178	1.18	1.06
	4438	0.415	---	---
	4470	0.231	1.95	1.28
	4761	0.266	---	---
	4762	0.206	2.11	1.32
	4807	0.264	2.24	1.35
	4811	0.047	1.93	1.36
	4817	0.034	2.16	1.33
	4833	0.051	---	---
	4834	0.330	2.26	1.35
	4847	0.054	3.16	1.56
	4871	0.652	1.41	1.13
	4904	0.026	----	----
	6048	0.346	3.15	1.56
Zinc[b]	1197A	0.030	---	---
	4277	0.028	3.30	1.59
	4415	0.223	---	---
	4417	0.165	2.41	1.39
	4470	1.380	1.69	1.21
	4737	0.137	4.45	1.84
	4761	0.159	---	---
	4762	0.201	1.60	1.19

Table 10-8F (Continued)

Regulated Pollutant	Episode	Long-Term Average Concentration[a] (mg/L, ppm)	1-Day Variability Factor	4-Day Variability Factor
Zinc (continued)	4807	0.129	3.00	1.53
	4811	0.053	1.32	1.10
	4817	0.333	2.02	1.29
	4871	0.165	1.71	1.22
	4904	0.016	---	---
Oil and Grease (as HEM)[b]	4737	13.6	1.51	1.16
	4871	6.13	---	---

[a]Concentrations for pollutants not detected in a sample are reported at the detection limit. In these cases, the detection limit was used to calculate the LTAs and variability factors.
[b]Data transfer from General Metals Subcategory Option2.
--- Not calculated due to insufficient data.
CBI - Confidential Business Information.

Table 10-8G

Episode-Level Long-Term Averages and Variability Factors for Printed Wiring Boards Subcategory (Option 2)

Regulated Pollutant	Episode	Long-Term Average Concentration[a] (mg/L, ppm)	1-Day Variability Factor	4-Day Variability Factor
Total Cyanide	(b)	(b)	(b)	(b)
Amenable Cyanide	(b)	(b)	(b)	(b)
Chromium[c]	1197A	0.638	---	---
	4011	0.871	---	---
	4079	0.970	---	---
	4310	2.272	---	---
	4330	0.067	2.65	1.45
	4384	0.585	1.68	1.21
	4415	0.0488	---	---
	4417	0.0188	2.47	1.41
	4438	0.093	---	---
	4460	1.175	---	—
	4470	0.0773	1.73	1.22
	4811	0.0085	1.19	1.07
	4817	0.0925	6.02	2.19
	4833	0.0679	3.37	1.61
	4847	0.301	2.73	1.46
	4871	0.0101	---	---
	4904	0.0147	1.91	1.27
Copper[c]	4277	0.559	1.73	1.22
	4737	0.175	8.73	2.82
	4806	0.609	3.58	1.66
	4807	1.049	2.98	1.52
	4817	0.238	2.50	1.41
	4833	0.128	1.63	1.19
	4834	0.060	1.81	1.24
	4847	0.080	3.05	1.54
	4904	0.046	2.03	1.30

Table 10-8G (Continued)

Regulated Pollutant	Episode	Long-Term Average Concentration[a] (mg/L, ppm)	1-Day Variability Factor	4-Day Variability Factor
Lead[c]	1197A	1.88	---	---
	4761	0.012	---	---
	4762	0.025	---	---
	4834	0.020	1.55	1.18
	4871	0.009	1.88	1.26
Manganese	4866	0.409	3.10	1.55
Nickel	4866	0.111	1.58	1.18
	4867	0.049	5.81	2.15
Tin	4866	0.120	3.17	1.56
	4867	0.037	4.69	1.90
Zinc[b]	1197A	0.030	---	---
	4277	0.028	3.30	1.59
	4415	0.223	---	---
	4417	0.165	2.41	1.39
	4470	1.381	1.69	1.21
	4737	0.137	4.45	1.84
	4761	0.159	---	---
	4762	0.201	1.60	1.19
	4807	0.129	3.00	1.53
	4811	0.053	1.32	1.10
	4817	0.333	2.02	1.29
	4871	0.165	1.71	1.22
	4904	0.016	---	---
Total Organic Carbon (TOC) (as indicator parameter)	4866	19.0	2.53	1.42
	4867	85.9	1.32	1.11
Total Sulfide[d]	4877	7.1	4.25	1.80

[a]Concentrations for pollutants not detected in a sample are reported at the detection limit. In these cases, the detection limit was used to
calculate the LTAs and variability factors.
[b] See Table 10-8A, Total and Amenable Cyanide.
[c] Data transfer from General Metals Subcategory Option 2.
[d] Data transfer from Oily Wastes Subcategory.
--- Not calculated due to insufficient data.
CBI - Confidential Business Information.

Table 10-8H

Episode-Level Long-Term Averages and Variability Factors for Printed Wiring Boards Subcategory (Option 4)

Regulated Pollutant	Episode	Long-Term Average Concentration[a] (mg/L, ppm)	1-Day Variability Factor	4-Day Variability Factor
Chromium[b]	4807	0.036	3.95	1.74
	4854	0.014	1.69	1.21
	4882	0.140	8.61	2.80
Copper	4855	0.003	---	---
Lead	4855	0.021	---	---
Manganese[b]	4807	0.130	2.21	1.34
Nickel[b]	4807	0.751	2.75	1.47
	4854	0.034	6.80	2.33
Oil and Grease (as HEM)[b]	4737	13.6	1.51	1.16
	4871	6.13	---	---
Total Sulfide[d]	4877	7.1	4.25	1.80
Tin	4855	0.0547	1.58	1.18
Total Organic Carbon (TOC) (as indicator parameter)[e]	4866	19.0	2.53	1.42
	4867	85.9	1.32	1.11
Total Suspended Solids (TSS) [b]	4807	22.0	2.10	1.31
	4882	4.1	---	---
Zinc[b]	4807	0.040	1.87	1.49
	4854	0.012	1.84	1.36
	4882	0.036	2.70	1.52
Amenable Cyanide	(f)	(f)	(f)	(f)
Total Cyanide	(f)	(f)	(f)	(f)

[a] Concentrations for pollutants not detected in a sample are reported at the detection limit. In these cases, the detection limit was used to calculate the LTAs and variability factors.
[b] Data transfer from General Metals Subcategory Option 4.
c Data transfer from General Metals Subcategory Option 2.
[d] Data transfer from Oily Wastes Subcategory.
[e] Data transfer from Printed Wiring Board Subcategory Option 2.
[f] See Table 10-8A, Total and Amenable Cyanide.
--- Not calculated due to insufficient data.
CBI - Confidential Business Information.

Table 10-8I

Episode-Level Long-Term Averages and Variability Factors for Oily Waste Subcategory (Option 6)

Regulated Pollutant	Episode	Long-Term Average Concentration[a] (mg/L, ppm)	1-Day Variability Factor	4-Day Variability Factor
Oil and Grease (as HEM)	4851	15.0	1.4	1.13
	4877	18.8	1.72	1.22
Total Sulfide	4877	7.1	4.25	1.80
Total Organic Carbon (TOC) (as indicator parameter)	4851	295	2.04	1.30
	4872	188	---	---
	4876	758	3.26	1.58
	4877	267	1.45	1.14
Total Suspended Solids (TSS)	4471	45.5	7.73	2.59
	4851	41.2	1.47	1.15
	4872	11.8	---	---
	4876	15.0	1.86	1.26
	4877	19.5	1.80	1.24

[a]Pollutants not detected in an effluent sample are reported at the detection limit. In these cases, concentrations at influent to treatment were determined to be at treatable concentrations (see Section 10.2).

Table 10-8J

Railroad Line Maintenance Subcategory (Option 10)

Regulated Pollutant	Episode	Long-Term Average Concentration[a] (mg/L, ppm)	1-Day Variability Factor	4-Day Variability Factor
BOD 5-Day (Carbonaceous)	6179	5.17	---	---
	4891[b]	---	6.90	2.39
	4892[b]	---	6.03	2.19
Total Suspended Solids (TSS)	4891[b]	---	3.13	1.55
	4892[b]	---	2.34	1.37
	6179	10.7	---	---
Oil and Grease (as HEM)	4892[b]	---	1.71	1.19
	4891[b]	---	1.82	1.25
	6179	6.22	---	---

[a]Pollutants not detected in an effluent sample are reported at the detection limit. In these cases, concentrations at influent to treatment were determined to be at treatable concentrations (see Section 10.2).
[b]Data transfer from Shipbuilding Dry Dock Subcategory.
---No samples collected on this day.
CBI - Confidential Business Information.

Table 10-8K

Shipbuilding Dry Dock Subcategory (Option 10)

Regulated Pollutant	Episode	Long-Term Average Concentration[a] (mg/L, ppm)	1-Day Variability Factor	4-Day Variability Factor
Oil and Grease (as HEM)	4891	6.2	1.71	1.19
	4892	11.8	1.82	1.25
Total Suspended Solids (TSS)	4805	29.5	---	—
	4891	11.6	3.13	1.55
	4892	55.0	2.34	1.37

[a]Pollutants not detected in an effluent sample are reported at the detection limit. In these cases, concentrations at influent to treatment were determined to be at treatable concentrations (see Section 10.2).
---No samples collected on this day.
CBI - Confidential Business Information.

Table 10-9A

Pollutant-Level Long-term Averages, Variability Factors and Limitations for General Metals Option 2

Regulated Parameter	Number of Sites (LTA)	Number of Sites (VF)	Median LTA (mg/L, ppm)	1-Day Variability Factor	4-Day Variability Factor	Maximum Daily (mg/L, ppm)	Maximum Monthly Avg. (mg/L, ppm)
Total Suspended Solids (TSS)	19	12	12	2.9	1.5	34	18
Oil and Grease (as HEM)	2	1	9.9	1.6	1.2	15	12
Total Organic Carbon (TOC) (as indicator parameter)	10	8	37	2.4	1.4	87	50
Total Organics Parameter (TOP)	42	12	2.3	3.9	1.8	9.0	4.3
Cadmium	5	2	0.08	2.0	1.3	0.14	0.09
Chromium	17	9	0.10	2.7	1.5	0.25	0.14
Copper	9	9	0.17	3.2	1.6	0.55	0.28
Total Cyanide	13	9	0.09	2.4	1.4	0.21	0.13
Amenable Cyanide	8	5	0.04	3.4	1.65	0.14	0.07
Lead	5	2	0.02	1.8	1.3	0.04	0.03
Manganese	4	4	0.07	1.9	1.3	0.13	0.09
Molybdenum	2	2	0.38	2.1	1.3	0.79	0.49
Nickel	15	10	0.24	2.2	1.4	0.50	0.31
Silver	4	3	0.05	4.7	2.0	0.22	0.09
Total Sulfide	1	1	7.1	4.3	1.80	31	13
Tin	2	2	0.44	3.0	1.6	1.4	0.67
Zinc	13	9	0.16	2.4	1.4	0.38	0.22

Table 10-9B

Pollutant-Level Long-term Averages, Variability Factors and Limitations for General Metals Subcategory (Option 4)

Regulated Parameter	Number of Sites (LTA)	Number of Sites (VF)	Median LTA (mg/L, ppm)	1-Day Variability Factor	4-Day Variability Factor	Maximum Daily (mg/L, ppm)	Maximum Monthly Avg. (mg/L, ppm)
Total Suspended Solids (TSS)	2	1	13	2.1	1.4	28	18
Oil and Grease (as HEM)	2	1	9.9	1.6	1.2	15	12
Total Organic Carbon (TOC) (as indicator parameter)	10	8	37	2.4	1.4	87	50
Total Organics Parameter	42	12	2.3	3.9	1.8	9.0	4.3
Cadmium	1	1	0.01	1.8	1.3	0.02	0.01
Chromium	3	3	0.04	4.8	2.0	0.17	0.07
Copper	3	3	0.08	5.9	2.2	0.44	0.16
Total Cyanide	13	9	0.09	2.4	1.4	0.21	0.13
Amenable Cyanide	8	5	0.04	3.4	1.7	0.14	0.07
Lead	1	---	0.03	1.6	1.2	0.04	0.03
Manganese	1	1	0.13	2.3	1.4	0.29	0.18
Molybdenum	2	2	0.38	2.1	1.3	0.79	0.49
Nickel	2	2	0.40	4.7	1.9	1.88	0.75
Silver	1	1	0.02	3.0	1.8	0.05	0.03
Total Sulfide	1	1	7.1	4.3	1.8	31	13
Tin	1	1	0.02	1.6	1.2	0.03	0.03
Zinc	3	3	0.04	2.2	1.5	0.08	0.06

Table 10-9C

Pollutant-Level Long-term Averages, Variability Factors and Limitations for Metal Finishing Job Shops Subcategory (Option 2)

Regulated Parameter	Number of Sites (LTA)	Number of Sites (VF)	Median LTA (mg/L, ppm)	1-Day Variability Factor	4-Day Variability Factor	Maximum Daily (mg/L, ppm)	Maximum Monthly Avg. (mg/L, ppm)
Total Suspended Solids (TSS)	NA	NA	NA	NA	NA	60[a]	31[a]
Oil and Grease (as HEM)	NA	NA	NA	NA	NA	52[a]	26[a]
Total Organic Carbon (as indicator parameter)	1	1	51	1.6	1.2	78	59
Total Organics Parameter	42	12	2.3	3.9	1.8	9.0	4.3
Cadmium	4	2	0.05	4.5	1.9	0.21	0.09
Chromium	6	3	0.31	4.3	1.8	1.3	0.55
Copper	6	3	0.34	4.0	1.8	1.3	0.58
Total Cyanide	13	9	0.09	2.4	1.4	0.21	0.13
Amenable Cyanide	8	5	0.04	3.4	1.7	0.14	0.07
Lead	3	1	0.07	1.8	1.3	0.12	0.09
Manganese	4	2	0.05	5.0	2.0	0.25	0.10
Molybdenum	2	2	0.38	2.1	1.3	0.79	0.49
Nickel	5	4	0.39	3.7	1.7	1.5	0.64
Silver	3	1	0.04	4.5	1.9	0.15	0.06
Total Sulfide	1	1	7.1	4.3	1.8	31	13
Tin	1	1	1.3	1.5	1.2	1.8	1.4
Zinc	8	4	0.11	3.3	1.6	0.35	0.17

[a] For existing sources, limits are transferred from 40 CFR 433 (Metal Finishing).
NA - Not applicable.

Table 10-9D

Pollutant-Level Long-term Averages, Variability Factors and Limitations for Metal Finishing Job Shops Subcategory (Option 4)

Regulated Parameter	Number of Sites (LTA)	Number of Sites (VF)	Median LTA (mg/L, ppm)	1-Day Variability Factor	4-Day Variability Factor	Maximum Daily (mg/L, ppm)	Maximum Monthly Avg. (mg/L, ppm)
Total Suspended Solids (TSS)	2	1	13	2.1	1.4	28	18
Oil and Grease (as HEM)	2	1	9.9	1.6	1.2	15	12
Total Organic Carbon (TOC) (as indicator parameter)	1	1	51	1.6	1.2	78	59
Total Organics Parameter	42	12	2.3	3.9	1.8	9.0	4.3
Cadmium	1	1	0.01	1.8	1.3	0.02	0.01
Chromium	3	3	0.04	4.8	2.0	0.17	0.07
Copper	3	3	0.08	5.9	2.2	0.44	0.16
Total Cyanide	13	9	0.09	2.4	1.4	0.21	0.13
Amenable Cyanide	8	5	0.04	3.4	1.7	0.14	0.07
Lead	1	---	0.03	1.6	1.2	0.04	0.03
Manganese	1	1	0.13	2.3	1.4	0.29	0.18
Molybdenum	2	2	0.38	2.1	1.3	0.79	0.49
Nickel	2	2	0.40	4.7	1.9	1.88	0.75
Silver	1	1	0.02	3.0	1.8	0.05	0.03
Total Sulfide	1	1	7.1	4.3	1.8	31	13
Tin	1	1	0.02	1.6	1.2	0.03	0.03
Zinc	3	3	0.04	2.2	1.5	0.08	0.06

Table 10-9E

Pollutant-Level Long-term Averages, Variability Factors and Limitations for Non-Chromium Anodizing Subcategory (Option 2)

Regulated Parameter	Number of Sites (LTA)	Number of Sites (VF)	Median LTA (mg/L, ppm)	1-Day Variability Factor	4-Day Variability Factor	Maximum Daily (mg/L, ppm)	Maximum Monthly Avg. (mg/L, ppm)
Total Suspended Solids (TSS)	2	2	12	4.4	1.8	52 [a]	22 [a]
Oil and Grease (as HEM)	2	1	9.9	1.6	12	15[a]	12 [a]
Aluminum	2	2	2.6	3.3	1.6	8.2	4.0
Manganese	4	4	0.07	1.9	1.3	0.13	0.09
Nickel	15	10	0.24	2.2	1.4	0.50	0.31
Zinc	13	9	0.16	2.4	1.4	0.38	0.22

[a] As shown in Section 14.0 EPA transferred limits for TSS and oil and grease for existing sources from 40 CFR 433 (Metal Finishing). The limits for TSS and oil and grease shown in this table are being proposed for new sources.

Table 10-9F

Pollutant-Level Long-term Averages, Variability Factors and Limitations for Printed Wiring Boards (Option 2)

Regulated Parameter	Number of Sites (LTA)	Number of Sites (VF)	Median LTA (mg/L, ppm)	1-Day Variability Factor	4-Day Variability Factor	Maximum Daily (mg/L, ppm)	Maximum Monthly Avg. (mg/L, ppm)
Total Suspended Solids (TSS)	NA	NA	NA	NA	NA	60 [a]	31[a]
Oil and Grease (as HEM)	NA	NA	NA	NA	NA	52 [a]	26[a]
Total Organic Carbon (TOC) (as indicator parameter)	2	2	53	2.0	1.3	101	67
Total Organics Parameter	42	12	2.3	3.9	1.8	9.0	4.3
Chromium	17	9	0.10	2.7	1.5	0.25	0.14
Copper	9	9	0.18	3.2	1.6	0.55	0.28
Total Cyanide	13	9	0.09	2.4	1.4	0.21	0.13
Amenable Cyanide	8	5	0.04	3.4	1.7	0.14	0.07
Lead	5	2	0.02	1.8	1.3	0.04	0.03
Manganese	1	1	0.41	3.1	1.6	1.3	0.64
Nickel	2	2	0.08	3.7	1.7	0.30	0.14
Total Sulfide	1	1	7.1	4.3	1.8	31	13
Tin	2	2	0.08	4.0	1.8	0.31	0.14
Zinc	13	9	0.16	2.4	1.4	0.38	0.22

[a] For existing sources, limits are transfered from 40 CFR 433 (Metal Finishing).

Table 10-9G

Pollutant-Level Long-term Averages, Variability Factors and Limitations for Printed Wiring Boards (Option 4)

Regulated Parameter	Number of Sites (LTA)	Number of Sites (VF)	Median LTA (mg/L, ppm)	1-Day Variability Factor	4-Day Variability Factor	Maximum Daily[1]	Maximum Monthly Avg.[1]
Total Suspended Solids (TSS)	2	1	13	2.1	1.4	28	18
Oil and Grease (as HEM)	2	1	9.9	1.6	1.2	15	12
Total Organic Carbon (TOC) (as indicator parameter)	2	2	53	2.0	1.3	101	67
Total Organics Parameter (TOP)	42	12	2.3	3.9	1.8	9.0	4.3
Chromium	3	3	0.4	4.8	2.0	0.17	0.07
Copper	1		0.01	1.6	1.2	0.01	0.01
Total Cyanide	13	9	0.09	2.4	1.4	0.21	0.13
Amenable Cyanide	8	5	0.04	3.4	1.7	0.14	0.07
Lead	1		0.03	1.6	1.2	0.04	0.03
Manganese	1	1	0.13	2.3	1.4	0.29	0.18
Nickel	2	2	0.40	4.7	1.9	1.88	0.75
Total Sulfide	1	1	7.1	4.3	1.8	31	13
Tin	1	1	0.06	1.6	1.2	0.09	0.07
Zinc	3	3	0.04	2.2	1.5	0.08	0.06

Table 10-9H

Pollutant-Level Long-term Averages, Variability Factors and Limitations for Oily Wastes Subcategory (Option 6)

Regulated Parameter	Number of Sites (LTA)	Number of Sites (VF)	Median LTA (mg/L, ppm)	1-Day Variability Factor	4-Day Variability Factor	Maximum Daily (mg/L, ppm)	Maximum Monthly Avg. (mg/L, ppm)
Total Suspended Solids (TSS)	5	4	20	3.3	1.6	63	31
Oil and Grease (as HEM)	2	2	17	1.6	1.2	27	20
Total Organic Carbon (TOC) (as indicator parameter)	4	3	282	2.3	1.4	633	378
Total Organics Parameter	42	12	2.3	3.9	1.8	9.0	4.3
Total Sulfide	1	1	7.1	4.3	1.8	31	13

Table 10-9I

Pollutant-Level Long-term Averages, Variability Factors and Limitations for Railroad Line Maintenance Subcategory (Option 10)

Regulated Parameter	Number of Sites (LTA)	Number of Sites (VF)	Median LTA (mg/L, ppm)	1-Day Variability Factor	4-Day Variability Factor	Maximum Daily (mg/L, ppm)	Maximum Monthly Avg. (mg/L, ppm)
5-Day Biochemical Oxygen Demand (BOD_5)	1	2	5.2	6.5	2.3	34	12
Total Suspended Solids (TSS)	1	2	11	2.8	1.5	30	16
Oil and Grease (as HEM)	1	2	6.3	1.8	1.3	11	7.6

Table 10-9J

Pollutant-Level Long-term Averages, Variability Factors and Limitations for Shipbuilding Dry Docks Subcategory (Option 10)

Regulated Parameter	Number of Sites (LTA)	Number of Sites (VF)	Median LTA (mg/, ppml)	1-Day Variability Factor	4-Day Variability Factor	Maximum Daily (mg/L, ppm)	Maximum Monthly Avg. (mg/L, ppm)
Total Suspended Solids (TSS)	3	2	30	2.8	1.5	81	44
Oil and Grease (as HEM)	2	2	9.0	1.8	1.3	16	11

Source: MP&M LTA Database.

11.0 COSTS OF TECHNOLOGY BASES FOR REGULATIONS

This section describes the methodology used to estimate the costs for implementing each of the technology options under consideration for the MP&M Point Source Category. Section 8.0 describes the technologies considered and Section 9.0 describes the combination of these technologies into options for in-process source reduction and recycling and end-of-pipe wastewater treatment. The cost estimates, together with the pollutant reduction estimates described in Section 12.0, provide a basis for evaluating the options discussed in Section 9.0. The cost estimates also provide a basis for determining the economic impact of the regulation on the industry as discussed in the report titled Economic, Environmental, & Benefit Analysis of the Proposed Metal Products & Machinery Rule (EEBA) (1). The EEBA is included in the public record for this rulemaking.

EPA used the following approach to estimate compliance costs for the MP&M industry.

- Select probability samples of MP&M industry sites to receive industry surveys (see Section 3.0). EPA estimated costs of compliance for each survey site (i.e., model site) based on factors such as unit operations, wastewater characteristics, treatment currently in place, etc. (see Section 11.2).

- Analyze field sampling data for unit operations to determine the pollutant concentrations of untreated wastewater in the industry (see Section 12.0).

- Identify candidate in-process source reduction and recycling and end-of-pipe wastewater treatment technologies, and group them into technology options. The technology options serve as the basis of compliance cost and pollutant loading calculations (see Section 9.0).

- Analyze field sampling data for wastewater treatment systems to determine pollutant removal performance of the selected technologies (see Section 10.0).

- Develop cost equations for capital and operating and maintenance (O&M) costs for each of the technologies (see Section 11.4).

- Evaluate the current (baseline) treatment technology in place at each model site (i.e., survey site) and estimate baseline pollutant loadings and operating and maintenance costs using a computerized design and cost model (the MP&M Design and Cost Model).

- Use the MP&M Design and Cost Model to estimate compliance costs (presented in Section 11.2) and pollutant loadings (presented in Section 12.0) for each model site for each option.

- Use sample weights based on survey sample frame to estimate, for national population, industry compliance costs and pollutant loadings.

- Estimate total annualized costs, cost effectiveness, and the economic impact to the industry (presented in the EEBA) using output from the MP&M Design and Cost Model.

EPA estimated industry-wide costs for 10 technology options by computing compliance costs for technology trains at 890 model sites. The Agency used these model sites to estimate costs for 63,000 water-discharging MP&M sites using statistically calculated industry weighting factors (i.e., sample weights). Many of these 63,000 MP&M sites are indirect dischargers with flows under the proposed low flow exclusions and are not included in the final cost estimates of the proposed rule. Section 11.1 summarizes the results of the costing effort. Section 11.2 presents the methodology used to select and develop model sites. Section 11.3 presents the methodology for estimating costs, including descriptions of the components that define capital and annual costs, sources of cost data, standardization of cost data, an overview of the MP&M Design and Cost Model, and general assumptions used for costing. Section 11.4 describes the design and costing methodology for each in-process and end-of-pipe technology used in the options. Tables are presented in the text and figures are located at the end of this section.

11.1 Summary of Costs

EPA identified several in-process and end-of-pipe technologies applicable to MP&M wastewater (Section 8.0), and combined these into technology options (Section 9.0). Overall, EPA considered 10 technology options, although several options are only applicable to certain MP&M subcategories. Based on the technologies included in each option and the specific wastewater generated at the MP&M model sites (based on questionnaire responses), EPA used the MP&M Design and Cost Model to estimate compliance costs for each model site for each option.

Table 11-1 presents annualized costs for both direct and indirect dischargers by subcategory for all proposed options for existing sources (Options 2, 6, 10). Costs for options that EPA did not propose are not presented in this section but are discussed in Section 14. EPA notes that costs for options 1, 3, 5, 7, and 9 (those options without pollution prevention (P2) cost more and remove fewer pollutants than the comparable technology with pollution prevention (see Section 14).

Cost estimates presented in Table 11-1 will not equate with those presented in the EEBA because those costs include other system annual costs (e.g., taxes and amortization). In

addition, EEBA cost estimates are presented in 1999 dollars (where costs in this section are in 1996 dollars), and the EEBA cost estimates do not include costs for facilities that are projected to close in the baseline based on a site's responses to EPA's economic portion of industry questionnaires, (i.e., based on a site's responses to EPA's economic portion of industry questionnaires, EPA estimates these facilities will close, regardless of the MP&M effluent guidelines, prior to the implementation of the MP&M guidelines).

Table 11-1

MP&M Total Estimated Annualized Costs at the Proposed Options for Existing Sources

Subcategory	Proposed Option Number	Direct Dischargers		Indirect Dischargers		
		Number of Sites	Total Annualized Cost (millions of 1996 dollars)	Number of Sites	Flow Cutoff	Total Annualized Cost (millions of 1996 dollars)
General Metals	2	3,794	230	3,055	1 MGY	1,570
Metal Finishing Job Shop	2	15	1.3	1,514	None	178
Non-Chromium Anodizing	2	NA	NA	Not Proposed	None	Not Proposed
Printed Wiring Board	2	11	2.5	621	None	147
Steel Forming and Finishing	2	43	29.3	110	None	24
Oily Waste	6	911	11.2	226	2 MGY	10
Railroad Line Maintenance	10	34	1.18	Not Proposed	None	Not Proposed
Shipbuilding Dry Dock	10	6	2.15	Not Proposed	None	Not Proposed
All Categories: Annualized Costs	2/6/10	4,814	280	5,530	--------	1,930

Source: MP&M Design and Cost Model.
NA - Not applicable, EPA's data collection efforts have not identified any direct discharging non-chromium anodizing facilities.
Note: Cost estimates presented in this table will not equate with those presented in the EEBA. The cost estimates in the EEBA are presented in 1999 dollars and do not include costs for facilities that are projected to close in the baseline.

11.2 Model Site Development

The Agency used a model site approach to estimate costs for the 63,000 water-discharging sites in the MP&M Point Source Category based on cost estimates for a statistically sampled subset of sites. To account for the variability in processes and treatment systems in place within the MP&M Point Source Category, EPA developed a model site from each survey (see Section 3.0) that met the criteria described below.

11.2.1 Site Selection

EPA selected model sites from sites receiving industry surveys. Section 3.1 discuss data collection and survey activities. The Agency selected a site as a model site if it met the following criteria:

- The site discharged wastewater (treated or untreated) to either a surface water or publicly owned treatment works (POTW); and

- The site supplied sufficient technical data required to estimate compliance costs and pollutant loadings reductions associated with the technology options.

Based on these criteria, EPA selected 890 survey respondents for model site development. The Agency used statistically-determined survey weights to estimate the national MP&M industry population of 63,000 sites. Development of the survey weights and the statistical methodology used to characterize the industry are documented in the public record for this rulemaking.

11.2.2 Wastewater Stream Parameters

Based on the information provided by the sites in their survey responses, follow-up letters, and phone calls, EPA classified each process wastewater stream at each site by the type of unit operation (e.g., machining, electroplating, acid treatment) generating the wastewater. For each operation, EPA used survey data to obtain the following parameters:

- **Wastewater discharge flow rate.** For each process wastewater stream, sites reported the total wastewater discharge flow rate from the unit operation. For sites that did not report wastewater discharge data, EPA statistically imputed wastewater flow rates using other data provided in the site's survey or by using data for similar unit operations reported in other surveys. The approach for this modeling is documented in the public record for this rulemaking.

- **Production rate.** Sites reported production rates in either surface area processed, mass of metal removed, or air flow rate. The production

parameter used depended on the unit operation. EPA used surface area for surface finishing or cleaning operations, mass of metal removed for metal removal operations such as machining and grinding, and air flow rate for air pollution control operations. For sites that did not report production data, EPA statistically imputed production rates using other data provided in the site's survey or by using data for similar unit operations reported in other surveys. The approach for this modeling is documented in the public record for this rulemaking.

- **Operating schedule.** EPA used survey responses to estimate the operating rate (hours per day (hpd) and days per year (dpy)) of each unit operation when supplied by sites. For blank responses, EPA used the following:

  - The maximum hpd and dpy reported by the site for other unit operations;

  - The survey response for wastewater treatment system operating schedule, if all hpd and dpy responses at the unit operation level were blank; or

  - 8 hpd and 250 dpy, if all unit operation operating rate survey responses were blank and no wastewater treatment system operating schedule was provided.

- **Discharge destination.** EPA used survey responses to determine whether each unit operation discharged process wastewater, and if so, whether the wastewater was discharged to a surface water or POTW. EPA also determined from the survey responses whether the wastewater was treated on site prior to discharge. The MP&M Design and Cost Model did not assign costs to wastewater that sites reported to be contract hauled off site, deep-well injected, discharged to septic systems, not discharged, or reused on site. For sites that did not report a discharge destination for some or all operations, EPA modeled the destination based on other technical information provided in the survey (e.g., types of discharge permits, discharge destination of other unit operations, process flow diagrams).

11.2.3 Pollutant Concentrations

The Agency estimated the concentration of each pollutant in each model site's process wastewater stream using field sampling data for raw wastewater discharged from MP&M unit operations. Section 3.0 discusses the field sampling program. EPA used these data with survey flow and production data to calculate the pollutant loadings. Section 12.0 discusses these calculations in more detail as well as the calculations for estimating site specific pollutant

removals. In addition, Section 10 provides information about the data used to estimate pollutant concentrations in the effluent stream following treatment for the various technology options.

11.2.4 Technology in Place

The term "technology in place" refers to those technologies that the Agency considered to be installed and operating at a model site at the time the facility completed the detailed industry survey. EPA accounted for technology in place in the costing and pollutant removal efforts to ensure that EPA accurately assessed the treatment costs associated with a facility upgrading its treatment system (including P2) to meet the MP&M standards and the current level of pollutant being discharged by facilities with treatment in place.

Although both the 1989 and 1996 MP&M Detailed Surveys requested detailed information on end-of-pipe treatment-in-place, only the 1996 MP&M Detailed Survey requested information about a facility's in-process pollution prevention technologies. For the 1996 MP&M Detailed Surveys, EPA assigned pollution prevention technology in place based on information contained in the responses to this survey. For other model sites, the Agency assumed in-process pollution prevention technologies were in place for a particular unit operation if the model site's process wastewater stream had a production-normalized flow rate (PNF, volume of wastewater per unit of production) below the median PNF calculated from the 1996 MP&M Detailed Survey for processes incorporating that pollution prevention technology. For example, if a 1989 survey site reported a machining wastewater stream with a PNF below the median PNF for centrifugation and pasteurization of machining coolant, then the Agency assumed that the model site had a machining coolant regeneration system in place. The median PNFs for each technology are listed in Section 15 and documented in the public record for this rulemaking.

EPA used a similar method to give credit to sites using efficient rinse schemes. EPA used the following parameters to compute flow reductions and costs for incorporating pollution prevention in rinse lines by converting the rinse to a two-stage countercurrent rinse. Additional information on the in-process pollution prevention and rinse flow reduction methodology can be found in the public record for this rulemaking.

- **Tank volume.** Although tank volume is a design parameter for countercurrent cascade rinsing, the Agency did not request this information in the surveys. EPA used a linear relationship between tank size and annual discharge flow rate to estimate the volume of the existing tank and for the estimated volumes of additional rinse tank(s) that may need to be installed in order to incorporate countercurrent cascade rinsing.

- **Rinse code.** EPA uses the rinse code parameter to compute a flow reduction for conversion of the model site's current rinse scheme to a two-stage countercurrent rinse. The 1996 MP&M Detailed Surveys contained specific information about each rinse. EPA used this information to determine the median PNF for each of the five general rinse categories.

As documented in the public record for this rulemaking, EPA assigned rinses from all surveys one of the five general rinse codes based on specific rinse code information contained in the survey or the PNF for the rinse stream. The Agency used these codes to estimate rinse flow reduction costs for model sites that do not currently use countercurrent rinsing.

- **Equipment code.** EPA determined the type of rinse equipment in place and assigned an equipment code based on the detailed rinse information in the 1996 surveys. For surveys that did not contain detailed information, EPA used the model site's PNF to assign an equipment code.

EPA reviewed survey data for each model site to assess the types of preliminary and end-of-pipe technologies in place at each site (e.g., chemical reduction of chromium, sludge pressure filtration). EPA identified end-of-pipe technologies on site that, based on technical considerations, it considered equivalent to technologies included in the technology options. For example, the Agency considered vacuum filtration to be equivalent to pressure filtration for sludge dewatering. EPA also identified technologies that it did not consider equivalent, and for which it assigned no credit for technology in place. For example, EPA did not consider oil/water separation equivalent to ultrafiltration in the technology options; however, it did consider ultrafiltration to be treatment in place for treatment options specifying oil/water separation or dissolved air flotation. EPA assumed that sites specifying only chemical precipitation also had a clarifier. In addition, the Agency assumed sites with treatment systems in place have the associated chemical feed systems in place. Site-specific assumptions regarding treatment technologies in place at model sites are included in the administrative record for this rulemaking (Technology in Place Documentation for MP&M Phase I/II Survey Respondents, DCN 16323/15799).

EPA used survey data for the following parameters to assess the capacity of the end-of-pipe technologies in place at the model sites:

- **Operating schedule.** EPA used survey responses to estimate the operating schedule (hours per day (hpd) and days per year (dpy)) for each treatment unit when supplied by sites. For blank responses, EPA determined the schedule using the following:

  - The maximum hpd and dpy reported for the unit operations, if all hpd and dpy responses for the treatment unit were blank;

  - The maximum hpd and dpy reported by the site for other unit operations associated with other treatment units; or

  - 8 hpd and 250 dpy, if all hpd and dpy survey responses were blank for unit operations and treatment units.

.

- **Wastewater streams treated.** EPA determined the unit operation wastewater streams treated by each end-of-pipe technology in place using the following:

  - Survey process flow diagrams or responses to survey questions regarding the destination of individual process wastewater streams, and

  - The logic used by the model for assigning streams to technologies if information provided in the survey was insufficient, (e.g., EPA assumed that sites treated cyanide-bearing streams using cyanide destruction if the site currently had it in place). This logic is described in Section 11.3.

EPA used the baseline operating schedule and wastewater streams treated by the technology to define the maximum operating capacity for each technology. The Agency determined design capacity flow from the larger of the survey response flow (when available) or the model design capacity flow as derived from the baseline flow. EPA assumed that each model site with end-of-pipe treatment technologies in place operated their system at 78 percent of full capacity (at baseline). The Agency estimated the operating capacity based on an average of survey data (documentation is included in the public record for this rulemaking). Because a site may need to increase its wastewater treatment capacity as a result of the process changes associated with some of EPA's technology options, Section 11.3.4 presents assumptions regarding how the model accounted for baseline end-of-pipe technologies with insufficient capacity.

11.3 Methodology for Estimating Costs

This section discusses the methodology for estimating costs, including the components of cost (Section 11.3.1), the sources and standardization of cost data (Section 11.3.2), the MP&M Design and Cost Model (Section 11.3.3), and the general assumptions made during the costing effort (Section 11.3.4).

11.3.1 Components of Cost

The components of the capital and annual costs and the terminology used in developing these costs are presented below.

Capital Costs

The capital costs consist of two major components: direct capital costs and indirect capital costs. The direct capital costs include:

- Purchased equipment cost, including ancillary equipment (e.g., piping, valves, controllers);

- Delivery cost (based on the equipment weight and a shipping distance of 500 miles); and

- Installation cost (including labor and site work).

EPA derived the direct components of the total capital cost separately for each treatment unit or pollution prevention technology. When possible, EPA obtained costs for various sizes of preassembled, skid-mounted treatment units from equipment vendors. If costs for preassembled, skid-mounted treatment units were not available, EPA obtained catalog prices for individual system components (e.g., pumps, tanks, feed systems) and summed these prices to estimate the cost for the treatment unit.

Indirect capital costs consist of secondary containment, engineering, contingency, and contractor fees. When combined with the direct capital costs, these form the total capital investment. EPA estimates the indirect costs as percentages of the total direct capital cost, as shown in Table 11-2.

Table 11-2

Components of Total Capital Investment

Item Number	Item	Cost
1	Equipment capital costs including required accessories, installation, delivery, electrical and instrumentation, yard piping, enclosure, pumping, and retrofit allowance	Direct capital cost
2	Engineering/administrative and legal	10% of item 1
3	Secondary containment/land costs	10% of item 1
4	Total plant cost	Sum of items 1 through 3
5	Contingency	15% of item 4
6	Contractor’s fee	5% of item 4
7	Total capital investment	Sum of items 4 through 6

Source: MP&M Design and Cost Model.

Annual Costs

As with capital costs, the annual costs have both a direct and an indirect component. The equations used to calculate individual equipment direct annual costs include the following.

- **Raw material costs.** Chemicals and other materials used in the treatment processes (e.g., calcium hydroxide, sulfuric acid, sodium hypochlorite);

- **Operating labor and material costs.** The labor and materials directly associated with operation of the process equipment;

- **Maintenance labor and material costs.** The labor and materials required for repair and routine maintenance of the equipment; and

- **Energy costs.** Calculated based on total energy requirements (in kW-hrs).

Indirect annual costs include monitoring, taxes, insurance, and amortization. Monitoring is the periodic analysis of wastewater effluent samples to ensure that discharge limitations are being met. Section 11.3.2 discusses assumptions regarding monitoring frequency. The EEBA discusses taxes and amortization.

Total Annualized Costs

EPA calculated total annualized costs (TAC) from the capital and annual costs generated by the MP&M Design and Cost Model. The Agency assumed a 7 percent discount rate over an estimated 15-year equipment life.

11.3.2 Sources and Standardization of Cost Data

EPA obtained capital and annual cost data for the technologies that constitute EPA's technology options (see Section 9) from equipment vendors, literature, and from existing MP&M sites. The Agency used specific data from the 1989 and 1996 MP&M Detailed Surveys whenever possible; however, the required types of data were often either not collected or not supplied by the sites. The major sources of equipment cost data were equipment vendors, while the literature provided most of the annual cost information.

Capital and annual cost data were standardized to 1996 dollars (the most current year in which EPA collected survey data) based on the following:

- **Capital Equipment.** EPA adjusted capital costs obtained in 1998 dollars to 1996 dollars using RSMeans Building Construction Historical Cost Indexes (see Table 11-3). The values of this index for 1996 and 1998 were 110.2 and 114.4, respectively. EPA decreased capital equipment

costs by 3.7 percent (110.2/114.4 × 100) to account for inflationary changes between 1996 and 1998.

- **Chemicals.** EPA used the Chemical Marketing Reporter from December, 1997 to obtain chemical prices.

- **Water and Sewer Costs.** EPA based water and sewer use prices on data collected through an EPA Internet search of various public utilities located throughout the United States for years ranging from 1996 to 1999. EPA adjusted rates to a 1996 basis using the RSMeans Building Construction Historical Cost Indexes. The average water and sewer use charges were $2.03 per 1,000 gallons and $2.25 per 1,000 gallons, respectively.

- **Energy.** EPA determined electricity prices from the U.S. Department of Energy's Energy Information Administration. The average electrical cost to industrial users from 1994 to 1996 was $0.047 per kW-hr.

- **Labor.** EPA used labor rate of $29.67 per hour to convert the labor requirements of each technology into annual costs. The Agency obtained the base labor rate from the Monthly Labor Review, which is published by the U.S. Bureau of Labor Statistics of the U.S. Department of Labor. Excluding the maximum and minimum values, EPA used the largest remaining monthly value for 1997 for production labor in the fabricated metals industry, $12.90 per hour, as a conservative estimate. The Agency added 15 percent of the base labor rate for supervision and 100 percent for overhead to obtain the labor rate of $29.67 per hour.

- **Monitoring.** EPA did not include the annual cost of wastewater analyses because it assumed that no incremental monitoring costs would be incurred at the technology options above a site's current baseline monitoring.

- **Contract Hauling.** EPA based contract-hauling costs on averaged data from the 1996 MP&M Detailed and Screener Surveys as discussed in Section 11.4.4. The Agency estimated costs for contract hauling of RCRA hazardous metal hydroxide sludge from Pollution Prevention and Control Technology for Plating Operations (3). The contract hauling costs for various waste types are provided in Table 11-4.

Table 11-3

RSMeans Building Construction Historical Cost Indexes

Year	Index
1989	92.1
1990	94.3
1991	96.8
1992	99.4
1993	101.7
1994	104.4
1995	107.6
1996	110.2
1997	112.8
1998	114.4

Reference: Historical Cost Indexes, RSMeans Building Construction Cost Data, 56th Annual Edition, 1998, page 594. (2)

Table 11-4

Contract-Hauling Costs for Various Waste Types

Waste Type	Cost ($/gallon)
RCRA hazardous non-hazardous paint sludge	3.70
RCRA hazardous metal hydroxide sludge (3)	1.95
RCRA non-hazardous oil	0.86
Solvent (paint and paint stripping waste)	2.85
Oily wastewater	1.33
General metal-bearing wastewater	2.00
Cyanide-bearing wastewater	5.64
Hexavalent chromium-bearing wastewater	3.51
Chelated metal-bearing wastewater	1.40

Source: 1996 MP&M Detailed and Screener Surveys.

11.3.3 MP&M Design and Cost Model

The Agency developed cost modules for the in-process source reduction and recycling and end-of-pipe wastewater treatment technologies and practices included in the technology options. Table 11-5 presents these technologies and practices. Specific details regarding the design and costing of each technology and practice are described in Section 11.4.

Figure 11-1 shows the relationship between in-process and end-of-pipe technologies and practices.

Table 11-5

Wastewater Treatment Technologies and Source Reduction and Recycling Practices for Which EPA Developed Cost Modules

In-Process Technologies and Practices	End-Of-Pipe Technologies and Practices
Countercurrent cascade rinsing Centrifugation and pasteurization of machining coolants Centrifugation of painting water curtains	Chemical reduction of hexavalent chromium Cyanide destruction Chemical reduction of chelated metals Chemical emulsion breaking Gravity oil/water separation Dissolved air flotation Gravity oil emulsion breaking (baseline only, see Section 11.3.4) Ultrafiltration for oil removal Contract hauling of solvent degreasing wastewaters Chemical precipitation Gravity clarification for solids removal Microfiltration for solids removal Sludge thickening Sludge pressure filtration Multimedia filter (baseline only, see Section 11.3.4)

Source: MP&M surveys, MP&M site visits, technical literature.

EPA developed a computerized design and cost model to estimate compliance costs and pollutant loadings for the MP&M technology options, taking into account each site's treatment in place. The model was programmed with modules, which allowed the user to specify various combinations of technologies and pollution prevention practices to be costed as required by the technology options and as required by each model site's wastewater stream characteristics. A baseline run estimated current annual costs (operating and maintenance) for each site and assessed the current capacity of treatment equipment in place using the site's specified treatment equipment and the estimated wastewater flow requiring a particular type of treatment. For estimating costs and pollutant loadings for each of the technology options, the model costed each site by assigning a particular type of treatment unit to each wastestream generated by the site (see Table 11-6). EPA took into account current treatment in place and existing annual costs (for chemical addition, etc.) from baseline when estimating costs associated with the proposed rule. EPA designated specifically which unit operations would feed each treatment unit (or pollution prevention technology) based on the properties of that unit operation's discharge stream (e.g., cyanide bearing wastewater feeds cyanide destruction, flowing rinses feed countercurrent cascade rinsing).

In the context of the MP&M cost program, "model" refers to the overall computer program and "module" refers to a computer subroutine that generates costs and pollutant

loadings for a specific in-process or end-of-pipe technology or practice (e.g., chemical precipitation and sedimentation, contract hauling). EPA adapted some modules from cost modules used for previous EPA rulemaking efforts for the metals industry, while it developed others specifically for this rulemaking effort.

Table 11-6

List of Unit Operations Feeding Each Treatment Unit or In-Process Technology

Treatment Unit / P2 Equipment	Unit Operations Feeding Unit[a]
Countercurrent cascade rinsing	Acid treatment with chromium rinse
	Acid treatment without chromium rinse
	Alkaline cleaning for oil removal rinse
	Alkaline treatment with cyanide rinse
	Alkaline treatment without cyanide rinse
	Anodizing with chromium rinse
	Anodizing without chromium rinse
	Aqueous degreasing rinse
	Barrel finishing rinse
	Chemical conversion coating without chromium rinse
	Chemical milling rinse
	Chromate conversion coating rinse
	Corrosion preventive coating rinse
	Electrochemical machining rinse
	Electroless plating rinse
	Electrolytic cleaning rinse
	Electroplating with chromium rinse
	Electroplating with cyanide rinse
	Electroplating without chromium or cyanide rinse
	Electropolishing rinse
	Heat treating rinse
	Salt bath descaling rinse
	Solvent degreasing rinse
	Stripping (paint) rinse
	Stripping (metallic coating) rinse
	Testing rinse
	Washing finished products rinse
	Carbon black deposition rinse

Table 11-6 (Continued)

Treatment Unit / P2 Equipment	Unit Operations Feeding Unit[a]
	Galvanizing/hot dip coating rinse
	Mechanical plating rinse
	Laundering rinse
Countercurrent cascade rinsing (cont.)	Cyanide rinsing
	Ultrasonic machining rinse
	Phosphor deposition rinse
Centrifiguration and pasteurization of machining coolant	Multiple unit operation rinse
	Grinding
	Machining
Centrifugation of painting water curtains	Painting - spray or brush
	Painting - immersion
Chemical emulsion breaking and Oil/water separation OR Dissolved air flotation OR Ultrafiltration system for oil removal	Alkaline cleaning for oil removal and rinse
	Aqueous degreasing
	Assembly/disassembly
	Electrical discharge machining rinse
	Electrolytic cleaning
	Electroplating without chromium or cyanide
	Floor cleaning and rinse
	Grinding rinse
	Heat treating
	Impact deformation and rinse
	Machining and rinse
	Painting - spray or brush
	Painting - immersion
	Pressure deformation
	Stripping (paint)
	Stripping (metallic coating) rinse
	Testing
	Thermal cutting rinse
	Washing finished products and rinse
	Bilge water
	Mechanical plating
	Photo image developing
	Photo imaging
	Steam cleaning
	Vacuum impregnation

Table 11-6 (Continued)

Treatment Unit / P2 Equipment	Unit Operations Feeding Unit[a]
	Laundering
	Calibration
	Centrifugation and pasteurization of machining coolant
Chemical reduction of hexavalent chromium	Acid treatment with chromium and rinse
	Anodizing with chromium and rinse
	Chromate conversion coating and rinse
	Electroplating with chromium and rinse
	Stripping (paint)
	Wet air pollution control - chromium
	Chromium drag-out reduction and rinse
Chemical reduction of chelated metals	Electroless plating and rinse
Cyanide destruction	Alkaline treatment with cyanide and rinse
	Electroplating with cyanide and rinse
	Cyanide rinsing and rinse
	Cyanide drag-out destruction and rinse
	Wet air pollution control - cyanide
Solvent hauling	Solvent degreasing

[a] Note - A unit operation can feed more than one treatment unit or in-process pollution prevention technology. EPA assumed that the model sites commingled all MP&M wastewater generated for treatment by chemical precipitation, except for wastewater from the Oily Wastes, the Shipbuilding Dry Dock and Railroad Line Maintenance subcategories, and except for solvent-bearing wastewater which EPA costed for off-site disposal.

Figure 11-2 shows the logic used by the MP&M Design and Cost Model to apply the in-process technologies and pollution prevention practices to each site. For streams at model sites that EPA determined to not have technology in place (see Section 11.2.4), EPA applied flow reductions for each in-process technology as summarized below:

- EPA estimated a 20 to 80 percent flow reduction achieved by converting the current rinse scheme in place to countercurrent cascade rinsing.

- EPA assumed centrifugation and pasteurization of machining coolants reduced coolant use by 80 percent.

- EPA assumed centrifugation of painting water curtains achieved zero discharge of wastewater through 100 percent reuse of the treated wastewater in the painting booth (sludge removed from the centrifuge is contract hauled).

For countercurrent cascade rinsing, EPA estimated costs for each individual rinse stream at a site. EPA assumed that a site combined all wastewater from machining operations prior to centrifugation and pasteurization of machining coolants and combined wastewater from painting streams prior to paint curtain centrifugation.

Figure 11-3 presents the logic used by the MP&M Design and Cost Model to apply the end-of-pipe treatment technologies and practices for the following subcategories: General Metals, Metal Finishing Job Shops, Non-Chromium Anodizing, Printed Wiring Board, and Steel Forming and Finishing. In developing costs, EPA assumed sites would segregate wastewater streams from the unit operations and the in-process pollution prevention technologies (when applicable) according to pollutant characteristics (chromium, cyanide, chelated metals, oil, and solvent). Segregation of wastestreams provides for the most efficient and effective treatment of wastes. Solvent-bearing wastewater streams were contract hauled for off-site disposal, while the other segregated wastewater streams received preliminary treatment. EPA's Design & Cost Model combined the effluent from the preliminary treatment technologies with other wastewater streams not requiring preliminary treatment then treated the combined wastewater by chemical precipitation and sedimentation. The Cost Model sends the sludge from chemical precipitation to thickening and pressure filtration prior to contract hauling for off-site disposal. Finally, the Cost Model assumes a wastewater discharge from the chemical precipitation and sedimentation system to either a surface water or POTW according to the model site's current discharge destination (see Section 11.3.4 for general discharge status assumptions for sites with multiple discharge destinations).

Figure 11-4 presents the logic used by the MP&M Design and Cost Model to apply the end-of-pipe treatment technologies and pollution prevention practices for the Oily Wastes, Railroad Line Maintenance, and Shipbuilding Dry Dock subcategories. Each of these subcategories generates wastewater that primarily contains oily constituents; therefore, EPA did not include chemical precipitation and sedimentation following oil treatment in the Cost Model.

The model provided the following information, as applicable, for each technology designed for a model site:

- Total direct capital costs;
- Total direct annual costs;
- Electricity used and associated cost;
- Sludge generation and associated disposal costs;
- Waste oil generation and associated disposal costs;
- Water use reduction and associated cost credit;
- Chemical usage reduction and associated cost credit;
- Effluent flow rate; and
- Effluent pollutant concentrations.

Section 11.4 provides specific information calculated by each technology module.

11.3.4 General Assumptions Made During the Costing Effort

This section presents general assumptions that EPA applied throughout the MP&M Design and Cost Model. Technology-specific assumptions are presented under the appropriate technology descriptions in Section 11.4.

Calculation of Baseline Parameters

As discussed in Section 11.2.4, EPA determined the technologies in place, including the operating schedules and the wastewater streams treated as specified in the MP&M survey by the model site. Using this survey information, EPA modeled each site's current costs and pollutant loads, referred to as baseline values. EPA uses baseline values as the basis for determining the incremental costs and loads associated with each technology option. Before running the Cost Model for any of the technology options, EPA conducted a baseline run of the model to determine the following:

- Baseline (survey year) operating and maintenance costs incurred by sites in 1996 dollars;
- Baseline non-water quality impacts such as electricity usage, sludge generation, and waste oil generation;
- Baseline pollutant loadings; and
- Capacity flow rate of each wastewater treatment technology in place.

Because the purpose of the baseline run was to simulate the current treatment practices at each site, this run included technologies (e.g., batch emulsion breaking and gravity flotation, multimedia filtration) that EPA did not include in the technology options. The baseline run also reflected treatment combinations currently used by model sites that the Agency did not use in the technology options (e.g., gravity oil/water separation followed by ultrafiltration, batch emulsion breaking and gravity flotation followed by dissolved air flotation). As a conservative estimate for estimating baseline pollutant loadings (loadings prior to compliance with these proposed regulations), EPA assumed that all sites with treatment currently in place (including those sites not currently covered by the Metal Finishing regulations) were currently meeting the long-term average (LTA) concentrations (i.e., design concentrations) for the pollutants limited under the Metal Finishing effluent guidelines (40 CFR Part 433) and were meeting the LTA concentrations achieved by EPA's sampled BAT facilities for other pollutants of concern (i.e., those pollutants not regulated under 40 CFR Part 433). For sites that did not report treatment in place, EPA estimated baseline pollutant loadings on EPA's unit operation-by-unit operation sampling data for raw wastewater.

EPA subtracted the baseline values for operating and maintenance costs, non-water quality impacts, and pollutant loadings from the corresponding values calculated from each

technology option to determine the incremental impact in relation to the baseline for each technology option.

End-of-Pipe Technology in Place

EPA designed the Cost Model to account for in-process and end-of-pipe operating equipment already in place at the model sites. For end-of-pipe treatment technologies, EPA reviewed information in the surveys to assess which of the treatment technologies included in each option were in place at the sites. Some sites had no technologies in place, some had incomplete treatment in place, and others had complete treatment in place. EPA also assessed the design capacity flow for each treatment unit in place to determine whether each site had sufficient capacity to treat all of its MP&M process wastewater. The Agency derived design capacity flow from the larger of the site's reported survey value or the site's Cost Model design capacity flow (as derived from the baseline flow), assuming baseline flow was 78 percent of capacity (EPA based this assumption on the average value reported in surveys). For some treatment options, EPA's Cost Model selected treatment for a wastewater stream (see Table 11-6) that differed from the treatment utilized by the site at baseline. This situation sometimes required a treatment unit at a model site to treat additional wastewater streams at the EPA option. In these situations, the treatment capacity of the technology in place at baseline may have been insufficient. EPA made the following assumptions regarding capital costs and end-of-pipe technology capacities:

- If the technology was not in place at the model site, then EPA assigned capital costs to the site for a treatment unit of sufficient capacity;

- If the technology was in place at the model site with sufficient capacity to treat all of the wastewater, then EPA assigned no capital costs; and

- If the technology was in place at the model site but with insufficient capacity to treat all of the wastewater, then EPA assumed the site would operate the existing system at full capacity and EPA assigned capital costs to the site for an additional treatment unit to operate in parallel with the existing unit to treat the additional flow.

Additionally, EPA assumed that some sedimentation and oil treatment systems qualified as treatment in place for multiple options. For example, a microfiltration system for solids removal would be considered treatment in place for either microfiltration or clarification depending on the technology option, while a clarifier would only be considered treatment in place for clarification. Table 11-7 lists the technologies that EPA considered treatment in place for various options for both sedimentation and oil treatment.

Table 11-7

Sedimentation and Oil Treatment Technologies Considered Treatment in Place for Various Technology Options

Technology Specified by Option	Technologies Considered Treatment in Place
Microfiltration for solids removal	Microfiltration
Clarification	Clarification or microfiltration
Ultrafiltration for oil removal	Ultrafiltration
Dissolved air flotation	Dissolved air flotation or ultrafiltration
Chemical emulsion breaking and gravity oil/water separation.	Chemical emulsion breaking and gravity oil/water separation, batch chemical emulsion breaking and gravity flotation, dissolved air flotation, or ultrafiltration

Contract Hauling in Lieu of Treatment

EPA assessed the cost of contract hauling wastewater for off-site treatment compared to on-site treatment. Because many MP&M sites have flow rates lower than the minimum design capacity of the treatment unit, EPA determined that it is often less expensive for a model site to contract haul wastewater for off-site disposal rather than to treat it on site. To assess contract hauling in lieu of treatment, EPA compared the costs of contract hauling the wastewater with the costs of the treatment unit that would be used to treat it on site. If contract hauling was less expensive than treating on site, EPA's Cost Model assigned the site costs associated with contract hauling the wastewater. EPA based this determination on individual technologies and their influent flow rates rather than on the total site wastewater treatment system. For example, for a particular site, it may be less expensive to contract haul cyanide-bearing wastewater in lieu of treatment while still treating all other wastewater streams on site. The calculation for determining whether treatment on site was less expensive assumed an equipment life expectancy of 15 years and an annual interest rate of 7 percent.

EPA compared the following technologies to contract hauling in lieu of treatment:

- Centrifugation and pasteurization of machining coolants;
- Centrifugation of painting water curtains (general metal-bearing waste and paint sludge);
- Chemical reduction of hexavalent chromium;
- Cyanide destruction;
- Chemical reduction of chelated metals;
- Chemical emulsion breaking and gravity oil/water separation;
- Dissolved air flotation;

- Ultrafiltration for oil removal;
- Chemical precipitation and sedimentation; and
- Sludge pressure filtration.

In the case of wastewater requiring chemical precipitation and sedimentation treatment, EPA compared the costs of contract hauling the untreated end-of-pipe wastewater to the cost of the entire treatment system, which includes chemical precipitation, sedimentation (gravity clarification or microfiltration), sludge thickening, and pressure filtration.

Equipment Size Ranges

EPA developed equipment cost equations for each component of the treatment technologies. The validity ranges represent the minimum and maximum sizes (e.g., flow rates, volume capacities) for which EPA developed the equations. For wastewater streams requiring equipment with a capacity below the minimum range of validity, the cost model designed the equipment at the minimum size. For wastewater streams requiring equipment with a capacity above the maximum range of validity, the cost model designed multiple units of equal capacity to operate in parallel such that the equipment sizes were within the range of validity.

Batch Schedules

EPA designed either batch or continuous systems, depending on each model site's operating schedule and discharge flow rate. For batch systems, EPA determined the batch volume and operating schedule to minimize costs. If the volume of wastewater to be treated in a single day was less than the capacity of the minimum batch system size based on vendor information, then the Agency altered the site's wastewater treatment operating schedule such that the minimum system would be operated at capacity. For example, if the minimum cyanide destruction system was 480 gallons per batch, and a site generated 80 gallons of cyanide-bearing wastewater per day, then the Cost Model designed the cyanide destruction system to treat a 480-gallon batch once every six days.

Dilute Influent Concentrations

In rare cases, high wastewater flow rates at some sites resulted in pollutant concentrations below the long-term average technology effectiveness concentrations (discussed in Section 10.0) even after EPA applied its in-process pollution prevention practices to reduce the site's flow. In these cases, the Cost Model did not design or provide costs for a technology at the EPA option for that wastewater stream. When this situation occurred during the baseline run of the model, the Cost Model assigned costs for technologies in place.

Discharge Status

EPA classified a stream's discharge status as direct, indirect, contract haul, reuse, or zero discharge. Some model sites discharge their wastewater streams to multiple discharge

destinations at baseline. Although the Cost Model allows segregated streams to be contract hauled for off-site disposal, it assumes the model site combines the wastewater sent to treatment prior to chemical precipitation and sedimentation. Therefore, EPA assigned a single discharge status to each model site based on the following assumptions:

- EPA considered a site with any combination of individual MP&M streams with a direct discharging stream a direct discharging site;
- EPA considered a site with any combination of individual MP&M streams, except direct, with an indirect discharging stream an indirect discharging site; and
- EPA considered a site with any combination of individual MP&M streams, except direct and indirect, a zero discharger/contract-hauled site.

11.4 Design and Costs of Individual Technologies

This section discusses in detail the design and costing of the individual technologies that comprise the technology options. Additional documentation is included in the public record for this rulemaking. Table 11-8 presents capital and annual cost equations for the specific equipment mentioned in each technology description below.

11.4.1 Countercurrent Cascade Rinsing

The Agency applied costs for countercurrent cascade rinses for flowing rinses at the model sites (see Table 11-6). EPA gave treatment in place credit to facilities with countercurrent cascade rinsing in place at baseline. The countercurrent cascade rinse module applies a flow reduction to rinses and a cost associated with the conversion to a two-stage countercurrent rinse. The Agency assigned flow reductions ranging from approximately 20 percent to 80 percent based on the site's current PNF and type of rinsing equipment. EPA used information from the 1996 MP&M Detailed Survey responses to determine the percentages of flow reductions, as documented in the public record for this rulemaking. (See Section 15.2.4 for more information on countercurrent cascade rinsing flow reduction as related to the site's existing rinse scheme).

EPA applied costs based on the site's current rinse scheme. The module included capital and annual costs for the following equipment when necessary.

- A second rinse tank with a volume equal to the volume of the existing tank;
- Transfer pumps and piping; and
- An air-agitation system.

EPA did not include additional operating and maintenance costs for countercurrent cascade rinses because these would be the same as for the original rinse. Direct annual costs for this module included energy costs and a credit for water-use reduction. EPA

based the cost credit for water-use savings on the annual flow reduction for each countercurrent cascade rinse system and an average source water charge (as determined in Section 11.3.2).

Table 11-8

MP&M Equipment Cost Equations[a]

Equipment	Equation	Range of Validity
Countercurrent cascade rinsing	**A** = [(0.0004*TANKVOL + 0.2243)]*DPY*HPD*0.047] - [(Y-CCFLOW)*60*HPD*DPY*0.00203]	
	C = 6.047*TANKVOL + 3784.3	Tank, piping, and pump
	C = 0.5077*TANKVOL + 1077.8	Piping and pump
	C = 8*29.67	Labor only
Machine coolant regeneration system (including holding tanks)	**A** = [18*0.047*DPY*HPD] + [(HPD/8)*DPY*29.67] + [(DPY/5)*29.67] + [0.002*Y*60*HPD*DPY*1.95]+ [0.05*Y*60*HPD*DPY*0.86] - [0.05*0.80*Y*60*HPD*DPY*9.03] - [0.95*0.8*Y*60*HPD*DPY*0.00203]	Y#14
	C = 41,422	Y # 1
	C = 110,205	1 < Y # 2
	C = 142,831	2 < Y # 6
	C = 164,009	6 < Y # 10
	C = 191,331	10 < Y # 14
Paint curtain centrifuge	**A** = [0.047*KW*HPD*DPY] + [(HPD/8)*DPY*29.67] + [(DPY/5)*29.67)] + [TSS*3.785/10^6*2.2/0.4*Y*60*HPD*DPY/8.5*3.7] - [(Y*60*HPD*DPY) - (TSS*3.785/10^6*2.2/0.4*Y*60*HPD*DPY*0.6/8.34)]*0.00203	Y#53
	C = 7,254 (kW = 0.4)	Y # 8
	C = 10,325 (kW = 1.5)	8 < Y # 13
	C = 47,104 (kW = 2.2)	13 < Y # 26
	C = 62,936 (kW=3.7)	26 < Y # 53

Table 11-8 (Continued)

Equipment	Equation	Range of Validity
Feed system, aluminum sulfate (alum)	**A** = [1.36*HPD*DPY*0.047] + [0.0006615*Y*60*HPD*DPY] + [(HPD/8)*DPY*29.67] + [(DPY/5)*29.67]	Y < 350
	A = [1.49*HPD*DPY*0.047] + [0.0006615*Y*60*HPD*DPY] + [(HPD/8)*DPY*29.67] + [(DPY/5)*29.67]	Y $ 350
	C = 9.7882*Y + 9,718.7	
Feed system, calcium chloride, continuous	**A** = [[(0.0061*Y)+1.1696]*HPD*DPY*0.047] + [0.00125*Y*60*HPD*DPY] + [(HPD/8)*DPY*29.67] + [(DPY/5)*29.67]	Y # 350
	C = 28.805*Y + 10,683	
Feed system, calcium hydroxide (lime), continuous	**A** = [[(0.0006*Y)+1.2961]*HPD*DPY*0.047] + [0.000117*Y*60*HPD*DPY] + [(HPD/8)*DPY*29.67] + [(DPY/5)*29.67]	Y # 350
	C = 24.586*Y + 12,830	
Feed system, ferric sulfate, continuous	**A** = [[(0.0009*Y)+1.3313]*HPD*DPY*0.047] + [0.0000434*Y*60*HPD*DPY] + [(HPD/8)*DPY*29.67] + [(DPY/5)*29.67]	Y # 350
	C = 11.56*Y + 9,762.9	
Feed system, polymer	**A** = [0.2833*HPD*DPY*0.047] + [0.001*Y*60*HPD*DPY] + [(HPD/8)*DPY*29.67] + [(DPY/5)*29.67]	Y < 10
	C = 3,686	
	A = [[(0.0034*Y)+1.4171]*HPD*DPY*0.047] + [0.001*Y*60*HPD*DPY] + [(HPD/8)*DPY*29.67] + [(DPY/5)*29.67]	10 # Y # 4,000
	C = 20.685*Y + 9,822	
Feed system, sodium hydroxide, continuous (caustic)	**A** = [0.1864*HPD*DPY*0.047] + [0.0042*Y*60*HPD*DPY] + [(HPD/8)*DPY*29.67] + [(DPY/5)*29.67]	Y < 10
	C = 5,120	
	A = [((0.0071*Y)+1.1584)*HPD*DPY*0.047] + [0.0042*Y*60*HPD*DPY] + [(HPD/8)*DPY*29.67] + [(DPY/5)*29.67]	10 # Y # 4,000
	C = 77.564*Y + 21,506	

Table 11-8 (Continued)

Equipment	Equation	Range of Validity
Feed system, sulfuric acid	**A** = [0.0373*HPD*DPY*0.047] + [0.000222*Y*60*HPD*DPY] + [(HPD/8)*DPY*29.67] + [(DPY/5)*29.67]	Y < 10
	C = 4,938	
	A = [[(0.0023*Y)+1.683]*HPD*DPY*0.047] + [0.000222*Y*60*HPD*DPY] + [(HPD/8)*DPY*29.67] + [(DPY/5)*29.67]	10 # Y # 4,000
	C = 56.416*Y + 17,769	
Chemical emulsion breaking, coalescent plate separator (gravity oil/water separator) [requires sulfuric acid, alum, and polymer feed systems]	**A** = [(0.0512*Y+0.4524)*HPD*DPY*0.047] + [29.67*(HPD/8)*DPY] + [(DPY/5)*29.67] + [3.664*Y*HPD*DPY]	Y # 860
	C = 328.83*Y + 28,104	
Dissolved air flotation [requires lime, ferric sulfate, and polymer feed systems]	See ultrafiltration for oil removal.	Y < 4.42
	A = [(0.0728*Y+3.072)*HPD*DPY*0.047] + [0.0045*Y*60*HPD*DPY] + [29.67*HPD*DPY] + [(DPY/5)*29.67] + [0.86*0.0003*Y*60*HPD*DPY] + [0.86*0.071*Y*60*HPD*DPY]	4.42 # Y # 350
	C = 1,125.4*Y + 137,936	
Ultrafiltration for oil removal	**A** = [(0.71*Y+5.46)*HPD*DPY*0.047] + [0.4*Y+0.3] + [0.5*HPD*DPY*29.67] + [(DPY/5)*29.67] + [65.78*Y+193.46] + [(27,123*Y/24*365*60)*0.86*60*HPD*DPY]	Y # 406
	C = 3,596*Y + 235,146	
Batch oil-emulsion breaking with gravity flotation [requires sulfuric acid, alum, and polymer feed systems]	See dissolved air flotation.	Y < 100
	A = [(0.65*Y+49.7)*HPD*DPY*0.047] + [HPD*DPY*29.67] + [(DPY/5)*29.67] + [0.022*Y*60*HPD*DPY*0.86]	100 # Y # 300
	C = 17,204*Y + 2,000,000	
Chromium reduction system, sodium metabisulfite	**A** = [2.4225*HPD*DPY*0.047] + [0.002608*Y*60*HPD*DPY] + [(HPD/8)*DPY*29.67] + [(DPY/5)*29.67]	Y # 410
	C = 261.7*Y + 24,249	

Table 11-8 (Continued)

Equipment	Equation	Range of Validity
Alkaline chlorination with hypochlorite feed system (for cyanide destruction)	**A** = [4.845*HPD*DPY*0.047] + [0.012418*Y*HPD*DPY*60] + [0.125*HPD*DPY*29.67] + [(DPY/5)*29.67]	1 # Y # 200
	C = $30,137*Y^{0.1866}$	
Chelation breaking with dithiocarbamate treatment	**A** = [2.4225*HPD*DPY*0.047] + [0.000583*Y*60*HPD*DPY] + [(HPD/8)*DPY*29.67] + [(DPY/5)*29.67]	Y # 45
	C = 261.7*Y + 24,249	
Chemical precipitation [requires sulfuric acid, caustic, and polymer feed systems]	**A** = [0.932*HPD*DPY*0.047] + [(DPY/5)*29.67] + [(HPD/8)*DPY*29.67]	Y < 5
	C = 626.6*Y + 8,550	
	A = [((0.0571*Y)+0.0123)*HPD*DPY*0.047] + [(DPY/5)*29.67] + [(HPD/8)*DPY*29.67]	5 # Y # 4,000
	C = 784.547*Y + 34,216	
Clarifier, slant-plate (lamella)	**A** = 2*(DPY/5)*29.67	Y < 2
	C = 9,740	2 # Y < 10
	C = 15,057	10 # Y # 4,000
	C = 74.896*Y + 31,401	
Filtration, multimedia	**A** = [[(0.0504*Y)+1.0139]*HPD*DPY*0.047] + [(HPD/8)*DPY*29.67] + [(DPY/5)*29.67]	Y # 4,000
	C = 240.85*Y + 27,269	
Microfiltration system for metals removal	**A** = [(0.3*Y+6.3)*HPD*DPY*0.047] + [3.4*Y] + [0.5*HPD*DPY*29.67] + [(DPY/5)*29.67] + [184.2*Y+155.2]	Y # 406
	C = 1,728.3*Y + 69,337	
Sludge thickening	**A** = [0.246*HPD*DPY*0.047] + [2*(DPY/5)*29.67]	Y < 42
	C = 74.306*Y*60 + 3,746	
	A = [3.7*HPD*DPY*0.047] + [2*(DPY/5)*29.67]	42 # Y # 350
	C = 35.265*Y + 66,106	

Table 11-8 (Continued)

Equipment	Equation	Range of Validity
Filter press, plate-and-frame	**A** = [(60 + (30 * DPY * 2)) * NUM] + [FT3*DPY*7.48*1.95]	CFT3 # 6
	A = [(60 + (60 * DPY * 2)) * NUM] + [FT3*DPY*7.48*1.95]	CFT3 # 12
	A = [(60 + (90 * DPY * 2)) * NUM] + [FT3*DPY*7.48*1.95]	CFT3 > 12
	C = [1,658.8 * FT3] + 17,505	0.85 < FT3 # 76.5

Variable Definitions:

C = Direct capital costs (1996 dollars).
A = Direct annual costs (1996 dollars).
Y = Influent equipment flow (gallons per minute).
HPD = Operation hours per day.
DPY = Days of operation per year.
FT3 = Daily cake volume (FT^3) from all presses.
TANKVOL = Volume of countercurrent rinsing tank (gallons).
CCFLOW = Flow rate after countercurrent rinsing is supplied (gallons per minute).
kW = Kilowatts.
CFT3 = Cake volume (FT^3) per cycle per press (assume two cycles per day).
NUM = Number of filter presses.
TSS = Influent TSS concentration (mg/L).

[a]All costs are calculated in 1996 dollars.

11.4.2 Centrifugation and Pasteurization of Machining Coolant

EPA applied costs for centrifugation and pasteurization of machining coolant for machining and grinding operations discharging water-soluble or emulsified coolant (listed in Table 11-6). The treatment system used to estimate compliance costs consisted of a liquid-liquid separation centrifuge for removal of solids and tramp oils and a pasteurization unit to reduce microbial growth. The module added 50 percent excess capacity to each site's system to account for fluctuations in production. The Agency based capital and annual costs on packaged systems of different capacities. Flow rates of greater than 14 gallons per minute required multiple systems. The various size systems included the following equipment:

- High-speed, liquid-liquid separation centrifuge;
- Pasteurization unit; and
- Holding tanks for large volume applications.

Direct annual costs included operating and maintenance labor and materials, energy costs, sludge and waste oil disposal costs, and a cost credit for water- and coolant-use reduction. EPA estimated maintenance labor at one hour per week and operating labor at one hour per shift.

Based on site visit and vendor information, EPA assumed that this technology can reduce coolant discharge by 80 percent. The Agency based the amount of coolant and water saved on the site recycling 80 percent of the coolant and discharging a 20 percent blowdown stream to oil treatment. EPA assumed the coolant solution to be 95 percent water and 5 percent coolant, based on site visit and vendor information.

11.4.3 Centrifugation of Painting Water Curtains

EPA applied costs for centrifugation of painting water curtains to painting water curtain operations (listed in Table 11-6). The capital and annual costs include a centrifuge and a holding tank large enough to hold flow for one hour.

Direct annual costs included operating and maintenance labor and materials, energy costs, sludge disposal costs, and a cost credit for water-use reduction. EPA estimated maintenance labor at one hour per week and operating labor at one hour per shift.

EPA assumed that the model site reused all water discharged from the centrifugation system in painting operations, and the site contract hauled the sludge from the system as a hazardous/nonhazardous sludge. EPA estimated contract hauling costs using the average paint sludge hauling costs reported in the 1996 MP&M Detailed Surveys. Because actual disposal costs will depend on site-specific conditions (e.g., paint type and spray-gun cleaner requirements), EPA believes that the average cost for all paint sludge disposal reported in the surveys, regardless of RCRA hazard classification, is a better estimate than using either the

costs for RCRA hazardous or RCRA nonhazardous paint sludges. (See Table 11-4 for contract hauling costs and Section 11.4.4 below for more detailed information.)

11.4.4 Contract Hauling

The Agency estimated costs for off-site treatment and disposal of various types of wastes generated on site. These waste types include:

- Painting and paint stripping/solvent wastewater;
- Paint sludge;
- Wastewater containing oil and grease and organic pollutants;
- Waste oils/sludges;
- Chromium-bearing wastewater;
- Cyanide-bearing wastewater;
- Chelated metal-bearing wastewater;
- General metal-bearing wastewater; and
- Metal-bearing sludge.

Except for F006 hazardous waste, EPA estimated costs for off-site treatment and disposal of each waste type in dollars per gallon of waste using averages of cost data provided in the 1996 MP&M Detailed Surveys for contract hauling specific waste streams. The following briefly summarizes how EPA applied these costs throughout the MP&M Design and Cost Model (additional details are provided in the public record for this rulemaking);

- EPA estimated a cost of $2.85 per gallon for contract hauling painting and paint stripping wastewater for off-site treatment and disposal based on the cost for contract hauling solvent-bearing wastewater as reported in the 1996 MP&M Detailed Surveys.

- EPA estimated a cost of $3.70 per gallon for contract hauling paint sludge generated by the painting water curtain centrifugation system for landfilling as a hazardous/nonhazardous waste based on the values reported in the 1996 MP&M Detailed Surveys.

- EPA estimated a cost of $1.33 per gallon for contract hauling wastewater bearing oil and grease or other organic pollutants for off-site treatment based on the values reported in the 1996 MP&M Detailed Surveys. EPA used this estimate for sites at which the Cost Model determined contract hauling to be less expensive than treatment on site (machining coolant centrifugation and pasteurization system, chemical emulsion breaking and gravity oil/water separation, dissolved air flotation, or ultrafiltration for oil removal).

- EPA estimated a cost of $0.86 per gallon for contract hauling waste oil generated by machining coolant centrifugation and pasteurization, chemical emulsion breaking and gravity oil/water separation, dissolved air flotation, and ultrafiltration for oil removal based on the values reported in the 1996 MP&M Detailed Surveys. Dissolved air flotation also generated a waste sludge hauling cost, which was approximated using the waste oil cost.

- EPA estimated a cost of $3.51 per gallon for contract hauling hexavalent chromium-bearing wastewater for off-site treatment based on the values reported in the 1996 MP&M Detailed Surveys. EPA used this estimate for sites at which the Cost Model determined contract hauling to be less expensive than the chemical reduction of hexavalent chromium system.

- EPA estimated a cost of $5.64 per gallon for contract hauling cyanide-bearing wastewater for off-site treatment based on the values reported in the 1996 MP&M Detailed Surveys. EPA used this estimate for sites at which the Cost Model determined contract hauling to be less expensive than the cyanide destruction system.

- EPA estimated a cost of $1.40 per gallon for contract hauling chelated metal-bearing wastewater for off-site treatment based on the values reported in the 1996 MP&M Detailed Surveys. EPA used this estimate for sites at which the Cost Model determined contract hauling to be less expensive than the chemical reduction of chelated metals system.

- EPA estimated a cost of $2.00 per gallon for contract hauling metal-bearing wastewater for off-site treatment based on the values reported in the 1996 MP&M Detailed Surveys. EPA used this estimate for sites at which the Cost Model determined contract hauling to be less expensive than the chemical precipitation and sedimentation system and the sludge pressure filtration system.

- EPA estimated a cost of $1.95 per gallon for contract hauling metal-bearing sludge, generated by the sludge pressure filtration system and the machining coolant centrifugation and pasteurization system, for landfilling as an F006 hazardous waste based on the value reported in Pollution Prevention and Control Technology for Plating Operations (3).

11.4.5 Feed Systems

EPA estimated costs for generic feed systems. Where data were available, EPA incorporated treatment-specific feed systems and dosages into the treatment system costs. If this information was unavailable, EPA used literature information or engineering judgement to select

the dosages. The Agency used the following generic chemical dosages to estimate annual operating and maintenance costs:

- Polymer feed system - 20 mg/L (3);
- Continuous sodium hydroxide feed system - 1,685 mg/L (3);
- Continuous hydrated lime feed system - 376 mg/L (3);
- Continuous sulfuric acid feed system - 699 mg/L (3);
- Continuous ferric sulfate feed system - 74 mg/L (4);
- Continuous aluminum sulfate (alum) feed system - 648mg/L (4); and
- Continuous calcium chloride feed system - 830 mg/L (3).

The discussions for treatment systems that use these generic feed system costs and/or dosages refer back to this section. Capital and annual costs from these feed systems were not reported individually in Cost Model outputs but were summed into the overall treatment system capital and annual costs. The capital and annual costs for the following equipment were included:

- Raw material storage tank;
- Day storage tank with mixer;
- Chemical metering pumps;
- pH controller; and
- Supporting piping and valves.

EPA developed low-flow polymer, sodium hydroxide, and sulfuric acid feed modules with lower fixed capital and energy costs for flow rates less than 600 gallons per hour. The alum feed system was given lower energy costs for systems below 350 gallons per hour. Direct annual costs included operating and maintenance labor, energy costs, and chemicals. The polymer module also included an annual maintenance material cost that was 10 percent of the capital cost.

11.4.6 Chemical Emulsion Breaking and Gravity Oil/Water Separation

EPA estimated costs for chemical emulsion breaking and gravity oil/water separation systems to separate and remove oil and grease and organic pollutants. The Agency assumed that Model sites commingled all oil-bearing wastewater streams prior to treatment. Table 11-6 lists these wastewater streams.

For chemical emulsion breaking systems, the module included capital and annual costs for the following equipment:

- Flow equalization tank;
- Two emulsion breaking tanks;
- Two mixers;
- Sulfuric acid feed system (see Section 11.4.5);

- Polymer feed system (see Section 11.4.5);
- Alum feed system (see Section 11.4.5); and
- Wastewater pumps.

Emulsion breaking was followed by oil removal using a coalescent plate separator. For oil removal systems, the module included capital and annual costs for the following equipment:

- Feed pumps; and
- Oil/water separator.

Direct annual costs included operating and maintenance labor and materials, energy costs, raw materials (e.g,. sulfuric acid, alum, polymer), and waste oil disposal costs. Waste oil was contract hauled for off-site reclamation. EPA adjusted effluent flow rates for removal of waste oil, which it estimated to be 7.1 percent of the influent flow, based on MP&M survey data. Depending on the subcategory, EPA assumed model sites discharged the effluent from this system either to surface water or a POTW or to the chemical precipitation and sedimentation system. The Cost Model estimated costs associated with achieving the long-term average effluent concentrations of oil and grease and other pollutants removed by chemical emulsion breaking and gravity oil/water separation (see Section 10.3).

11.4.7 Dissolved Air Flotation

For the shipbuilding and railroad line maintenance subcategories, EPA estimated costs for dissolved air flotation systems to separate and remove oil and grease, suspended solids, and organic pollutants. The Agency assumed that model sites commingled all oil-bearing wastewater streams prior to treatment. Table 11-6 lists these wastewater streams.

The module included capital and annual costs for the following equipment:

- Flow equalization tank;
- Feed pumps;
- Oil/water separator;
- Chemical treatment tank;
- Lime feed system (see Section 11.4.5);
- Ferric sulfate feed system (see Section 11.4.5);
- Polymer feed system (see Section 11.4.5);
- Dissolved air flotation system with pressure tank and programmable logic controller (PLC);
- Oil storage tank; and
- Final pH adjustment tank.

Direct annual costs included operating and maintenance labor and materials, energy costs, raw materials (e.g., hydrated lime, ferric sulfate, polymer), and waste oil and sludge

disposal costs. EPA costed waste oil and sludge for contract hauling for off-site reclamation. Hydrated lime and ferric sulfate were added to the treatment flow, while the polymer volume was considered negligible. EPA adjusted effluent flow rates for removal of waste oil and sludge, which were respectively estimated as 7.1 percent and 0.03 percent of the influent flow, based on the MP&M survey data. EPA assumed model sites discharged effluent from this system either to surface water or a POTW. The Cost Model estimated costs associated with achieving long-term average effluent concentrations of oil and grease, total suspended solids, and other pollutants treated by dissolved air flotation (see Section 10.3). Because dissolved air flotation systems are not typically used for flow rates less than 265 gallons per hour, EPA costed model sites with flows less than 265 gph for ultrafiltration for oil removal.

11.4.8 Ultrafiltration System for Oil Removal

EPA estimated costs for ultrafiltration systems to separate and remove oil and grease, suspended solids, and organic pollutants. The Agency assumed that model sites commingled all oil-bearing wastewater streams prior to treatment. Table 11-6 lists these wastewater streams.

The module included capital and annual costs for the following equipment:

- Spiral-wound membrane filtration modules;
- Process and chemical tanks;
- Steel skid;
- Recirculation tank;
- Recirculation pump;
- Bag filter;
- Fix-mounted cleaning system;
- Sludge pump; and
- Electrical components (pH control/monitoring, temperature control, flow meter, pressure gauges).

Flow rates greater than 406 gallons per minute required multiple systems.

Direct annual costs included operating and maintenance labor and materials, energy costs, cleaning chemicals, membrane replacement, and waste oil disposal costs. The Cost Model assumed model sites contract hauled waste oil for off-site reclamation. Depending on the subcategory, EPA assumed the model sites discharged the effluent from this system either to surface water or a POTW or to the chemical precipitation and sedimentation system. EPA adjusted effluent flow rates for removal of waste oil, which was estimated as 5.2 percent of the influent flow, based on MP&M survey data. The Cost Model estimated costs associated with achieving long-term average effluent concentrations of oil and grease, total suspended solids, and other pollutants treated by ultrafiltration (see Section 10.3).

11.4.9 Batch Oil Emulsion Breaking with Gravity Flotation

EPA estimated costs for batch oil emulsion breaking with gravity flotation systems to separate and remove oil and grease, suspended solids, and organic pollutants. The Agency assumed that model sites commingled all oil-bearing wastewater streams prior to treatment.

Although this technology is not part of the MP&M technology options, EPA gave treatment in place credit for chemical emulsion breaking and gravity oil/water separation to sites with batch emulsion breaking with gravity flotation in place at baseline. The module included capital and annual costs for the following equipment:

- Polymer feed system (see Section 11.4.5);
- Sulfuric acid feed system (see Section 11.4.5);
- Alum feed system (see Section 11.4.5);
- Two mechanically cleaning bar screens;
- Three batch wastewater treatment tanks;
- Two segregated waste tanks;
- Three skim and saleable oil storage tanks;
- Two oil cooking tanks;
- Pumps;
- One air compressor;
- Six mixers (segregation, saleable oil, and oil cooker tanks); and
- Ancillary equipment (pipes and valves, heat trace, controls, and PLC).

Direct annual costs included operating and maintenance labor, energy costs, raw materials (e.g., polymer, sulfuric acid, alum), and waste oil disposal costs. EPA assumed model sites contract hauled waste oil for off-site reclamation. Sulfuric acid and alum were added to the treatment flow, while the polymer volume was considered negligible. The effluent from this system was discharged to the chemical precipitation and sedimentation system. EPA adjusted effluent flow rates for removal of waste oil, which was estimated as 2.2 percent of the influent flow, based on MP&M survey data. The Cost Model estimated costs associated with achieving long-term average effluent concentrations of oil and grease, total suspended solids, and other pollutants removed by this technology. For baseline, EPA used this technology for flow rates greater than 6,000 gallons per hour, whereas EPA used dissolved air flotation for flow rates between 265 and 6,000 gallons per hour and ultrafiltration for oil removal for flow rates less than 265 gallons per hour.

11.4.10 Chemical Reduction of Hexavalent Chromium

EPA estimated costs for batch and continuous systems to reduce hexavalent chromium to trivalent chromium prior to chemical precipitation and sedimentation. The Agency assumed that model sites commingled all chromium-bearing wastewater streams prior to

treatment and that all chromium in the wastewater was in the hexavalent form. Table 11-6 lists the chromium-bearing wastewater streams.

The Agency estimated costs for batch treatment for flow rates less than or equal to 600 gallons per day, and continuous systems for flow rates greater than 600 gallons per day. The module included capital and annual costs for the following equipment:

- Fiberglass reaction tank;
- Mixer;
- Sulfuric acid feed system;
- Sodium metabisulfate feed system;
- Flow equalization tank;
- Effluent pump; and
- pH and Oxidation-Reduction Potential (ORP) meters.

Direct annual costs included operating and maintenance labor and materials, energy costs, and raw materials (e.g., sulfuric acid, sodium metabisulfite). EPA based flow dependent costs on the volume of wastewater from chromium-bearing unit operations through the system, before treatment chemicals were added to the flow. EPA assumed model sites discharged effluent from this system to the chemical precipitation and sedimentation system. Although hexavalent chromium does not have a long-term average effluent concentration from chromium reduction systems (see Section 10.3), the Cost Model estimated costs associated with reducing hexavalent chromium. EPA also assumed that all other pollutant concentrations (including total chromium) remained unchanged in this treatment unit.

11.4.11 Cyanide Destruction

EPA estimated costs for batch and continuous alkaline chlorination systems to destroy cyanide prior to chemical precipitation and sedimentation. The Agency assumed that model sites commingled all cyanide-bearing wastewater streams prior to treatment. Table 11-6 lists these wastewater streams. EPA assumed that model sites did not send wastestreams that did not contain cyanide to the cyanide destruction system.

The Agency estimated costs for batch treatment for flow rates less than or equal to 600 gallons per day, and continuous systems for flow rates greater than 600 gallons per day. The cost model included capital and annual costs for the following equipment:

- Two reaction tanks (batch treatment uses a single tank, with the second tank operating as a batch-holding tank);
- Mixers;
- Sodium hydroxide feed system;
- Sulfuric acid feed system;
- Sodium hypochlorite feed system;
- Effluent pumps; and

- pH and ORP meters.

Direct annual costs included operating and maintenance labor and materials, energy costs, and raw materials (e.g., sodium hydroxide, sulfuric acid, sodium hypochlorite). EPA based flow dependent costs on the volume of wastewater from cyanide-bearing unit operation through the system, before treatment chemicals were added to the flow. The Agency assumed model sites discharged effluent from this system to the chemical precipitation and sedimentation system. The Cost Model estimated costs associated with achieving the long-term effluent concentrations of total and amenable cyanide from cyanide destruction systems. EPA also assumed that all other pollutant concentrations remained unchanged in this treatment unit.

11.4.12 Chemical Reduction/Precipitation of Chelated Metals

EPA estimated costs for batch and continuous chemical reduction/precipitation of chelated metal systems to break and precipitate electroless plating complexes (e.g., copper or nickel complexes) prior to chemical precipitation and sedimentation. The Agency assumed that model sites commingled all chelated-metal-bearing wastewater streams prior to treatment. Table 11-6 lists the chelated-metal-bearing wastewater streams.

The Agency costed batch treatment for flow rates less than or equal to 600 gallons per day, and continuous systems for flow rates greater than 600 gallons per day. The cost model included capital and annual costs for the following equipment:

- Fiberglass reaction tank;
- Mixer;
- Sulfuric acid feed system;
- Dithiocarbamate feed system;
- Flow equalization tank;
- Effluent pump; and
- pH and ORP meters.

Direct annual costs included operating and maintenance labor and materials, energy costs, and raw materials (e.g., sulfuric acid, dithiocarbamate). EPA based flow dependent costs on the volume of wastewater from chelated-metal-bearing unit operations through the system, before treatment chemicals were added to the flow. The Agency assumed that model sites discharged effluent from this system to the chemical precipitation and sedimentation system. Based on analytical data for these systems, EPA assumed that concentrations of carbon disulfide and dithiocarbamate increased across the system.

11.4.13 Chemical Precipitation

The Agency estimated costs for continuous chemical precipitation systems. EPA costed low-flow systems for model sites with influent flow rates less than or equal to 300 gallons per hour. EPA assumed that the model sites commingled all MP&M wastewater generated for

treatment by this technology, except for wastewater from the Oily Wastes, the Shipbuilding Dry Dock and the Railroad Line Maintenance subcategories, and except for solvent-bearing wastewater which EPA costed for off-site disposal.

The module included capital and annual costs for the following equipment:

- Sulfuric acid feed system (see Section 11.4.5);
- Polymer feed system (see Section 11.4.5);
- Caustic feed system (see Section 11.4.5);
- Equalization tank;
- Rapid-mix tank for precipitation;
- Flocculation tank;
- Final pH-adjustment tank;
- System feed pumps; and
- Rapid and flocculation mixers.

The module assumed that the total suspended solids leaving the chemical precipitation system was equivalent to the sum of influent total suspended solids and the dissolved solids that are converted to suspended solids. The approach for calculating suspended solids from dissolved solids is documented in the public record for this rulemaking. Additional flow from treatment chemical addition was considered negligible. EPA designed the Cost Model to include recycled water from the sludge thickener and filter press. The Agency assumed that model sites discharged effluent from this system to either clarification or microfiltration. Direct annual costs included operating and maintenance labor, energy costs, and raw materials (e.g., sulfuric acid, polymer, caustic).

11.4.14 Slant-Plate Clarifier

The Agency estimated costs for slant-plate (lamella) clarifier systems. EPA costed low-flow systems for model sites with influent flow rates less than or equal to 600 gallons per hour. This system treated effluent from the chemical precipitation system.

The module included capital and annual costs for the following equipment:

- Slant-plate clarifier; and
- One-time 80-hour training cost for operators to meet MP&M clarifier limits instead of the baseline 40 CFR Part 433 Metal Finishing effluent guideline limits.

The Cost Model estimated costs associated with achieving long-term average effluent concentrations for all pollutants treated by chemical precipitation with clarification (see Section 10.3). EPA calculated the amount of sludge generated by this system using site-specific influent pollutant concentration data for the commingled wastewater. The Agency assumed the sludge to be 3 percent solids and costed for discharge to a sludge-thickening tank. EPA assumed

that model sites discharge the effluent from this system to surface water or a POTW. Direct annual costs included maintenance labor and materials. EPA considered operating labor as part of chemical precipitation and accounted for pumps in the chemical precipitation and the sludge-thickening modules.

11.4.15 Multimedia Filtration

The Agency estimated costs for a multimedia filter to continuously remove filterable suspended solids. The system was designed as a polishing step for effluent from the clarifier. Although EPA did not include this technology in the MP&M technology options, it gave treatment in place credit to sites with multimedia filters in place.

The module included capital and annual costs for the following equipment:

- Multimedia filter skid;
- Holding tank for clarifier effluent (clearwell); and
- Media filter feed pump.

EPA assumed pollutant concentrations in the effluent from these systems to be equal to the clarifier long-term average concentrations except for total suspended solids, which was reduced 35 percent across this system based on MP&M sampling data. The Agency assumed filter backwash to be 1.2 percent of the influent flow to the chemical precipitation unit. EPA assumed model sites discharged filtrate from this system to surface water or a POTW. Direct annual costs included operating and maintenance labor and energy costs. EPA incorporated waste disposal costs from solids into the filter press module at sites operating multimedia filters.

11.4.16 Microfiltration for Solids Removal

The Agency estimated costs for continuous chemical precipitation systems followed by microfiltration for solids separation.

The module included capital and annual costs for the following equipment:

- Tubular membrane filtration modules;
- Carbon steel skid;
- Recirculation tank;
- Recirculation pump;
- Air back pulse system;
- Cleaning system;
- Sludge pump; and
- All associated instruments and controls.

Flow rates greater than 406 gallons per minute required multiple systems.

The Cost Model estimated costs associated with achieving long-term average effluent concentrations for all pollutants treated by chemical precipitation followed by microfiltration systems (see Section 10.3). EPA calculated the amount of sludge generated by this system using site-specific influent pollutant concentration data for the commingled wastewater. The Agency assumed the sludge to be 3.2 percent solids and costed for discharge to a sludge-thickening tank. EPA assumed model sites discharged the effluent from this system to surface water or a POTW. Direct annual costs included operating and maintenance labor and materials (e.g., replacement membranes, cleaning chemicals), and energy costs.

11.4.17 Sludge Thickening

The Agency estimated costs for sludge thickening by gravity settling for the sludge discharged from the chemical precipitation and sedimentation system. EPA assumed the sludge-thickening system to discharge 60 percent of influent flow as sludge, thus increasing the solids content of the sludge from 3 percent to 5 percent for clarifier effluent and from 3.2 percent to 5.3 percent for microfiltration effluent prior to further dewatering in the sludge pressure filtration system. The module included capital and annual costs for the following equipment:

- Sludge-thickening unit (package system); and
- Clarified water return pump.

EPA costed for model sites to discharge the sludge from this system to the sludge pressure filtration system. The Agency assumed model sites returned the remaining 40 percent of influent flow back to the chemical precipitation system as supernatant and it included this flow in its design. Direct annual costs included operating and maintenance labor and energy costs.

11.4.18 Sludge Pressure Filtration

The Agency estimated costs for the number of plate-and-frame filter presses needed to increase the solids content of the sludge from approximately 5 percent to 35 percent prior to contract hauling for off-site disposal. The module included capital and annual costs for the following equipment:

- Recessed plate or plate-and-frame filter press; and
- Two double-diaphragm sludge pumps.

Direct annual costs included operating and maintenance labor and sludge disposal costs. The Cost Model assumes model sites discharge the filtrate from this system to the chemical precipitation and sedimentation system.

11.5 References

1. U.S. Environmental Protection Agency. Economic, Environmental, & Benefits Analysis of the Proposed Metal Products & Machinery Rule. EPA-821-B-00-008, December 2000.

2. RSMeans Building Construction Cost Data, 56th Annual Edition, 1998, page 594. Historical Cost Indexes.

3. Cushnie, George C., CAI Engineering (prepared for NCMS/NAMF). Pollution Prevention and Control Technology for Plating Operations.

4. U.S. Environmental Protection Agency. MP&M sampling data.

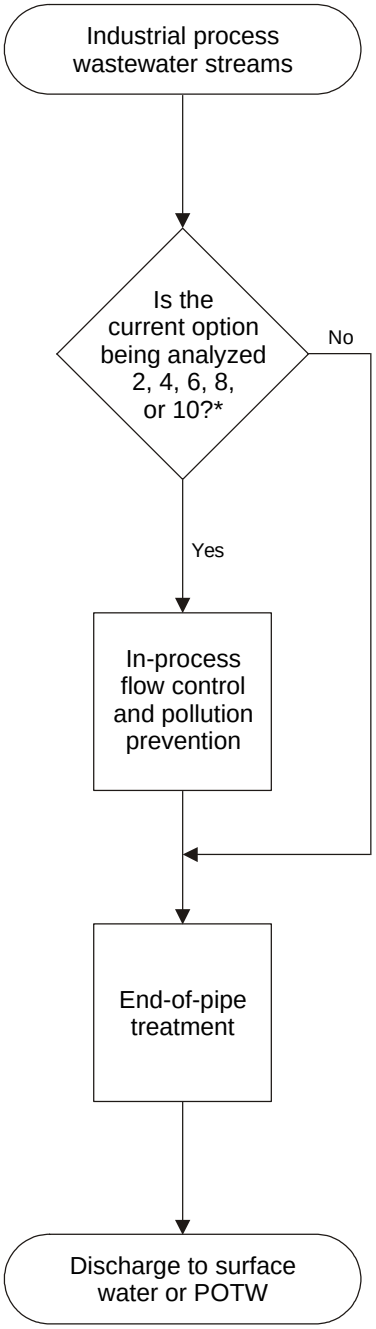

* See Section 9 for descriptions of the 10 technology options.

Figure 11-1. Relationship Between In-Process and End-of-Pipe Technologies and Practices

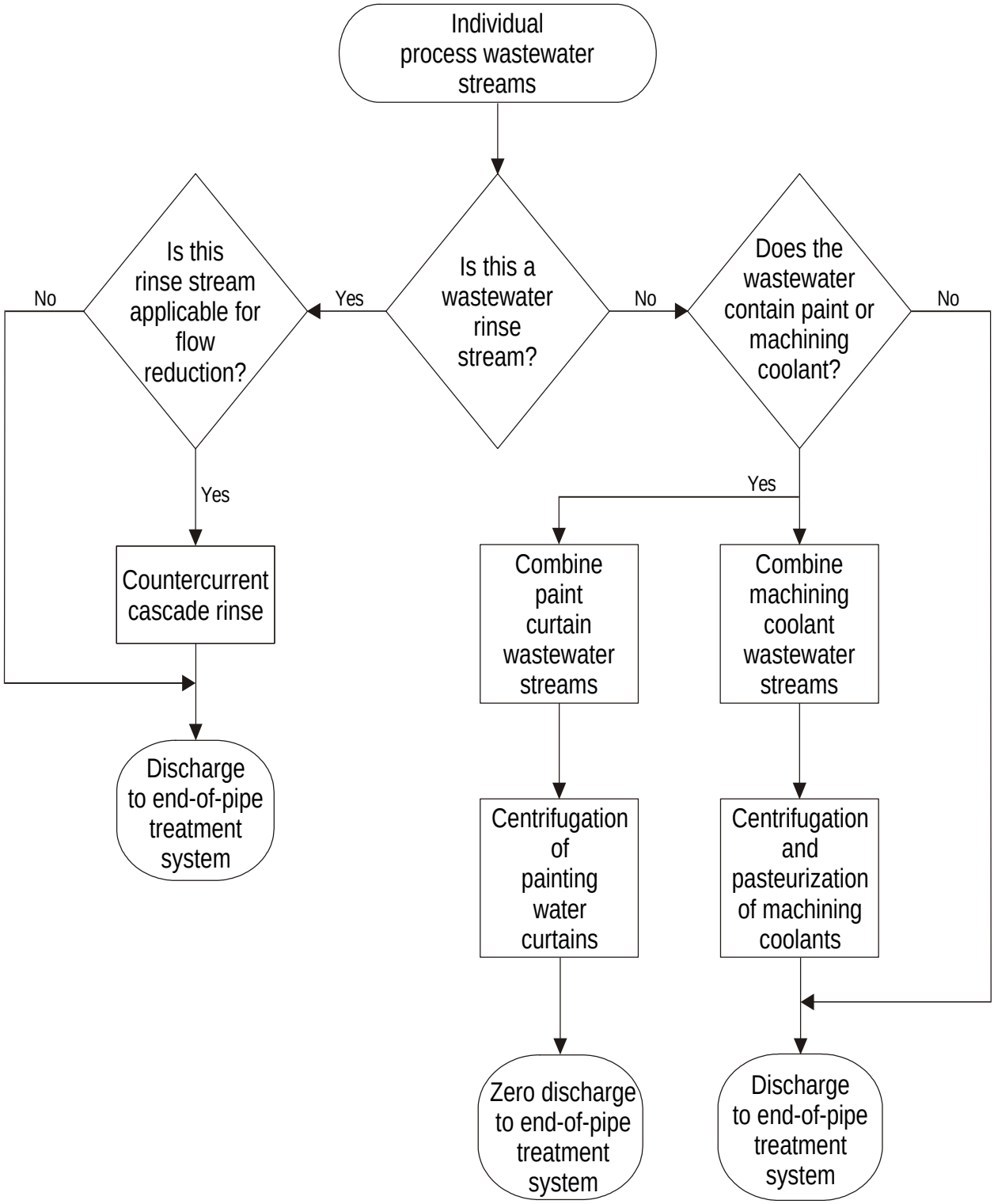

Figure 11-2. Components of Total Capital Investment

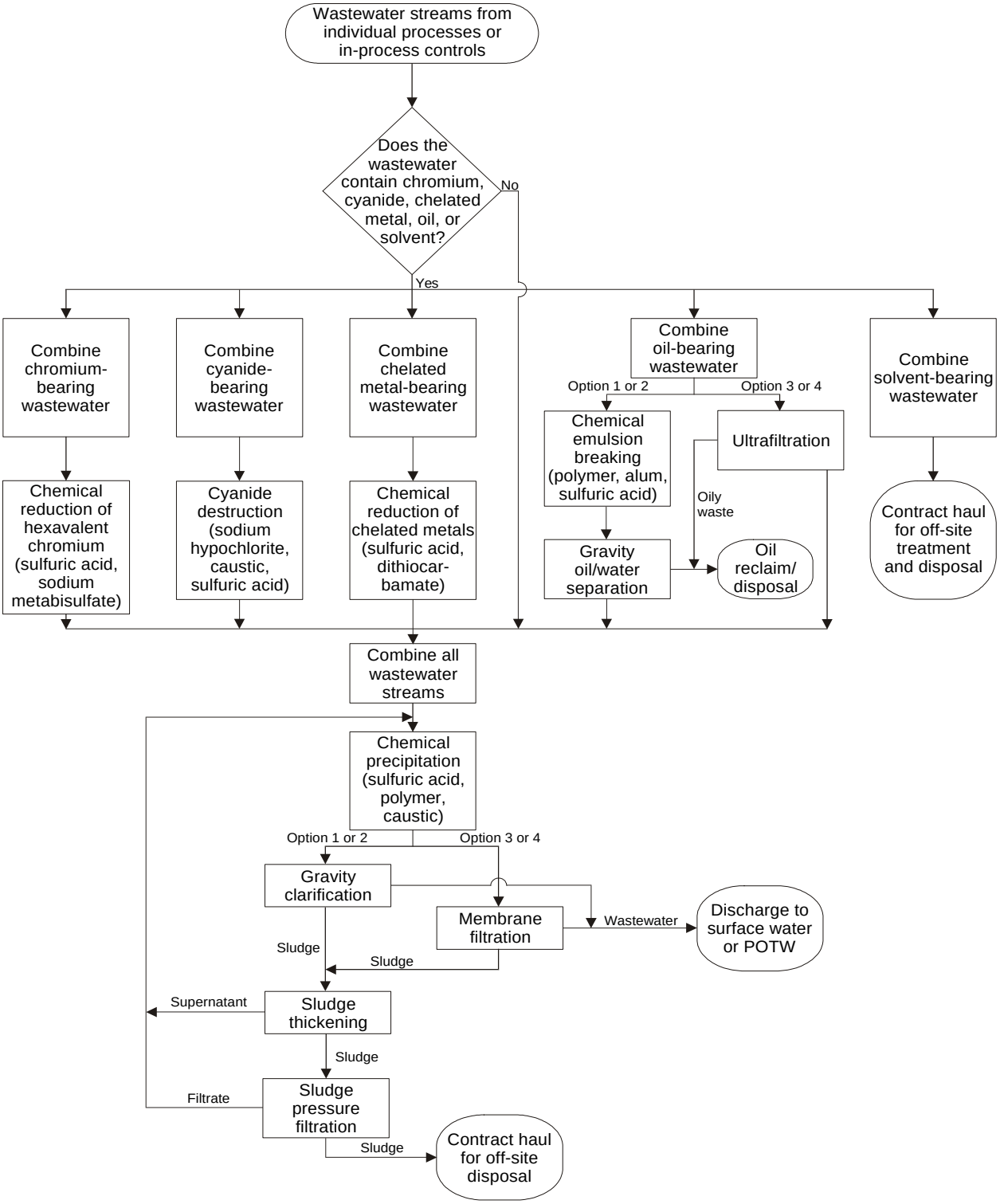

Figure 11-3. Logic Used to Apply End-of-Pipe Technologies and Practices for the Following Subcategories: General Metals, Metal Finishing Job Shops, Non-Chromium Anodizing, Printed Wiring Board, and Steel Forming and Finishing

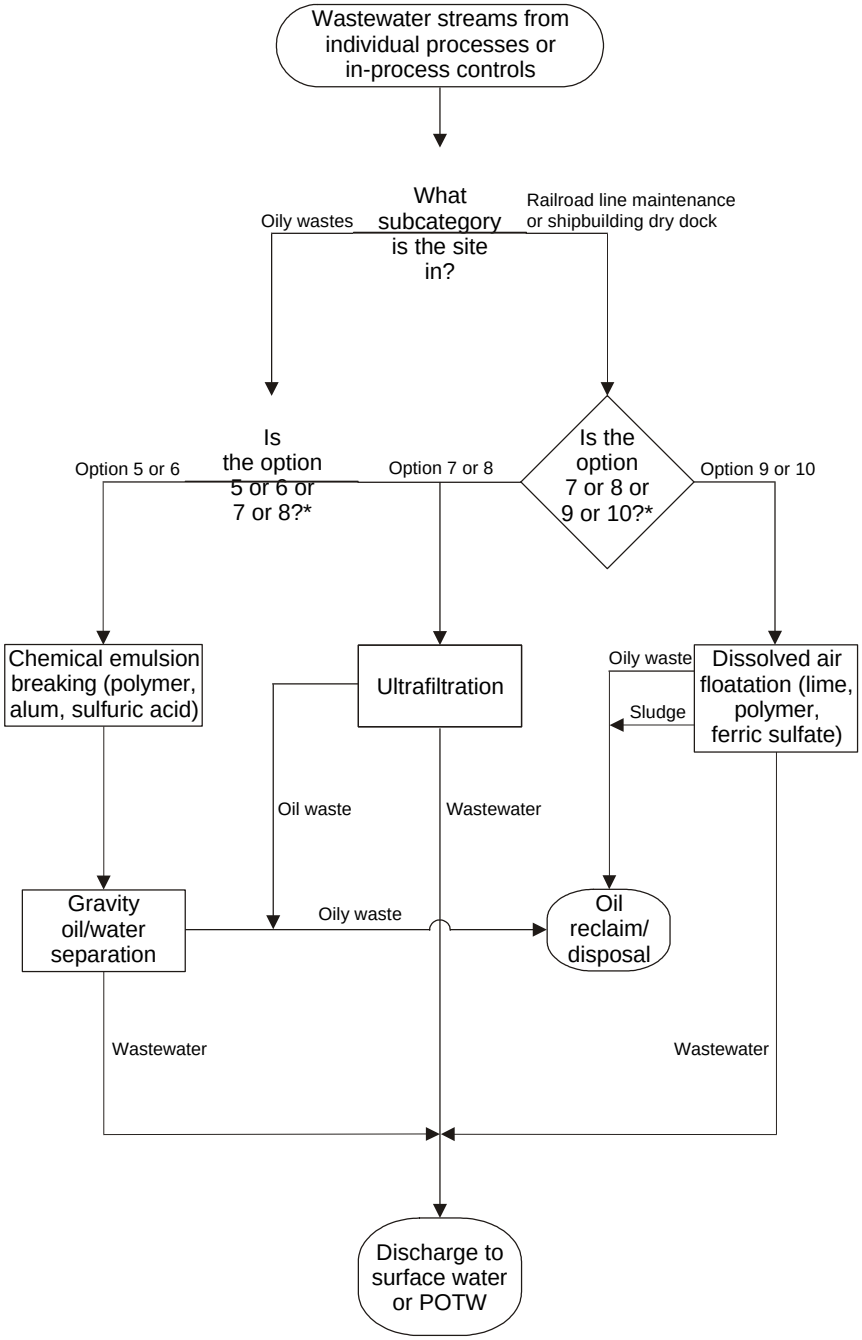

* See Section 9 for descriptions of the 10 technology options.

Figure 11-4. Logic Used to Apply End-of-Pipe Technologies and Practices for the Following Subcategories: Oily Waste, Railroad Line Maintenance, and Shipbuilding Dry Dock

12.0 POLLUTANT LOADING AND REDUCTION ESTIMATES

This section describes EPA's estimation of industry pollutant loadings and pollutant reductions for each MP&M technology option described in Section 9.0. The Agency estimated pollutant loadings and reductions from MP&M sites to evaluate loadings to surface waters and publicly owned treatment works (POTWs), and to assess the effectiveness of each MP&M technology option in reducing these loadings. An assessment of the water-quality impacts and benefits associated with the reduced pollutant loadings from MP&M facilities as estimated in this section is presented in the report "Economic, Environmental, and Benefits Assessment of the Proposed MP&M Rule." This report is located in the public record for this proposal.

In estimating the pollutant loadings, EPA assumed that all nondetected pollutants of concern are present at the detection limit. EPA did not use the same assumptions in all cases when calculating limits (see Section 10.0). Throughout this section, the terms "sampling point" and "sample" are used as defined below:

> *Sampling Point.* A sampling point is the physical location at which samples are collected. Example sampling points include a wastewater treatment influent stream, an electroplating bath, or a cleaning rinse.
>
> *Sample.* A sample is the unique volume of wastewater collected for analysis at a sampling point. A sample can include several different aliquots collected for analysis of multiple parameters. Each sample represents a unique period of time. EPA typically collected multiple samples from sampling points that represented flowing wastestreams (e.g., wastewater treatment systems, rinses).

Figure 12-1 summarizes the steps used to estimate the MP&M pollutant loadings and reductions for each technology option. These steps are described in Sections 12.1 and 12.2. Section 12.1 describes the calculation of pollutant concentrations for each unit operation. Section 12.2. presents the results of the raw, baseline, and post-compliance pollutant loading and reduction calculations for the industry.

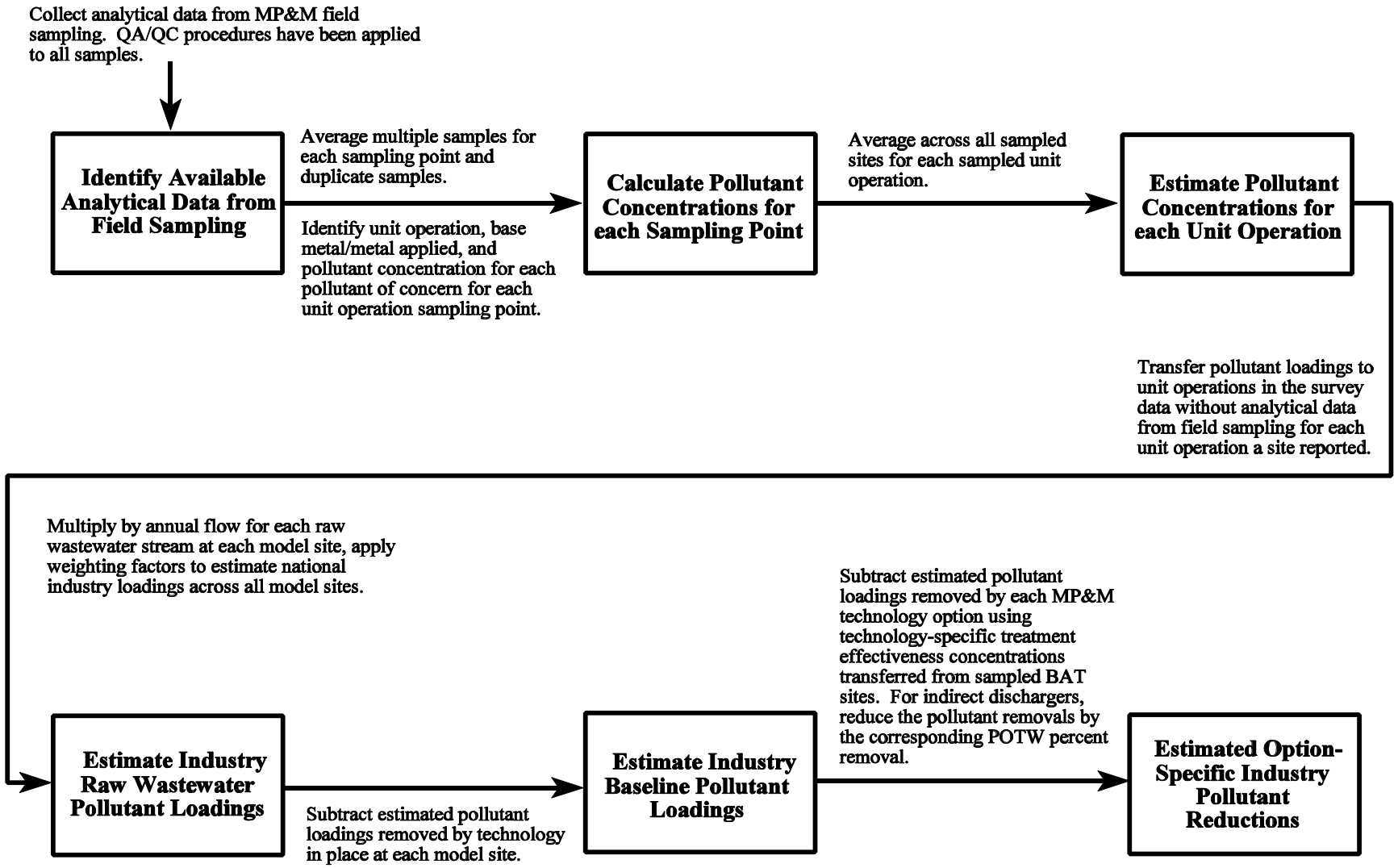

Figure 12-1. Estimation of MP&M Pollutant Loadings and Reductions

12.1 Estimation of Unit Operation Pollutant Concentrations

EPA used data collected during the MP&M sampling program to estimate pollutant concentrations in wastewater streams from each of the MP&M unit operations reported by questionnaire respondents as generating wastewater. EPA developed these estimates for each pollutant of concern (see Section 7.0). These data are included in Sampling Episode Reports (SERs) in the administrative record for this rulemaking. To develop the unit operation concentrations, EPA calculated pollutant concentrations for each sampling point (Section 12.1.1), then calculated the pollutant concentrations for each unit operation (Section 12.1.2).

The first step in estimating pollutant concentrations for each unit operation was to identify unit operations for which pollutant concentrations depend on metal type. This was important when transferring concentrations across unit operations (Section 12.1.2). EPA reviewed the unit operation descriptions and analytical data to identify those unit operations for which pollutant concentrations would be most dependent on metal type processed. While most MP&M unit operations are somewhat dependent on metal type processed, EPA identified two operations (and their associated rinses) for which pollutant concentrations are heavily dependent on metal type: electroplating and electroless plating. In both of these operations and associated rinses, pollutant concentrations depend on the metal type being applied in the operation. For example, chromium electroplating operations and rinses contain higher concentrations of chromium than other metals, while electroless nickel plating operations and rinses contain higher concentrations of nickel than other metals.

12.1.1 Calculate Pollutant Concentrations for Each Sampling Point

EPA developed a pollutant profile (i.e., concentrations for each pollutant of concern) for each sampling point. EPA used the following approach to calculate pollutant concentrations for each sampling point:

- *Average duplicate sample concentrations.* As discussed in Section 4.0, EPA collected duplicate samples at many sampling points as a quality control measure. EPA averaged the concentrations for the original and duplicate samples.

- *Average multiple sample concentrations for each sampling point.* At sampling points representing flowing wastewater streams (e.g., rinses), EPA typically collected multiple samples over time. EPA collected these samples to account for variability over time of the discharges from these streams. EPA averaged the concentrations for the samples collected on multiple days at the same sampling point. For example, if EPA collected three one-day composite samples for acid treatment rinsing at the same sampling point, it averaged the concentrations for each pollutant on each of the three days to estimate the pollutant concentration for the sampling point.

12.1.2 Estimate Pollutant Concentrations for Each Unit Operation

EPA estimated pollutant concentrations for each unit operation reported in the MP&M detailed surveys. For electroplating and electroless plating operations, EPA estimated concentrations for each unit operation and metal type combination reported in the surveys. EPA used the following steps to estimate the pollutant concentrations:

- *Identify all unit operations reported in the detailed surveys.* EPA queried the MP&M detailed survey database to identify all unit operations reported as discharging wastewater, as well as all unit operation and metal type combinations (based on applied metal) for electroplating and electroless plating. EPA considered unit operations performed at facilities in the Non-chromium Anodizing subcategory to be unique from unit operations performed in other subcategories because the non-chromium anodizing process primarily aluminum and perform a limited subset of unit operations, as described in Section 6.2.4. Therefore, EPA developed unique pollutant concentrations for operations performed at Non-chromium Anodizing facilities.

- *Estimate pollutant concentrations for each unit operation for which sampling analytical data are available.* EPA averaged the pollutant concentrations for each unit operation and each unit operation and metal type combination (for electroplating and electroless plating) across sites. For example, EPA averaged the site-level pollutant concentrations for all acid cleaning operations.

- *Transfer data to unit operations for which sampling data are not available.* The final step in estimating unit operation pollutant concentrations consisted of transferring data to unit operations for which EPA did not collect sampling data. EPA transferred pollutant concentrations from unit operations expected to have similar wastewater characteristics based on process considerations, including the following: the purpose of the unit operation (e.g., metal removal, contaminant removal); the purpose of the process water use (e.g., contact cooling water, cleaning solution, rinsewater); and the wastewater flow per unit of production as reported in the MP&M surveys. Supporting documentation for all data transfers of unit operation pollutant concentrations is contained in the administrative record for this rulemaking.

12.2 <u>Calculation of Industry Pollutant Loadings and Reductions</u>

EPA estimated the pollutant loadings for each pollutant of concern for each wastewater discharging unit operation at each model site (model site development is described in Section 11.2). EPA estimated industry-wide raw wastewater pollutant loadings, baseline

pollutant loadings, and option-specific loadings for each MP&M technology option as described in Sections 12.2.1 through 12.2.3. EPA subtracted the option-specific post-compliance pollutant loading estimates from the baseline loadings to estimate pollutant reductions for each option.

12.2.1 Industry Raw Wastewater Pollutant Loadings

Industry raw wastewater pollutant loadings represent the industry pollutant loadings before removal by treatment technologies currently in place at MP&M sites. EPA used the following steps to estimate the raw wastewater loadings:

- *Estimate site-specific raw wastewater pollutant loadings.* For each wastewater discharging unit operation at each model site, EPA multiplied the unit operation concentrations by its wastewater flow rate (as reported in the questionnaire) to obtain a mass loading. EPA then summed the loadings for each pollutant across all unit operations performed at each model site to develop a site-specific raw wastewater pollutant loading.

- *Estimate industry-wide raw wastewater pollutant loadings.* EPA multiplied the site-specific raw wastewater pollutant loadings for each pollutant of concern by the corresponding site-specific statistically derived weighting factors discussed in the report "Statistical Summary for the MP&M Industry Surveys." EPA summed the weighted loadings across all sites in each subcategory to develop subcategory-specific raw wastewater pollutant loadings. EPA also summed the weighted loadings across all sites to develop industry-wide raw wastewater pollutant loadings.

Tables 12-1 and 12-2 present the results of the estimation for industry raw wastewater annual pollutant loadings by subcategory for direct and indirect dischargers, respectively.

12.2.2 Industry Baseline Pollutant Loadings

Industry baseline pollutant loadings represent the industry pollutant loadings after accounting for pollutant removals by technologies already in place at MP&M sites. Section 11.0 describes the assessment of technology in place for each model site. EPA used the following steps to estimate the baseline pollutant loadings:

- *Estimate site-specific baseline pollutant loadings.* EPA performed a baseline run of the MP&M Design and Cost Model to estimate site-specific baseline pollutant loadings for each model site. The baseline run used the technologies in place at each site rather than the MP&M technology options. EPA estimated the site-specific baseline loadings as the pollutants being discharged after the application of the treatment technologies currently in place at model sites.

- *Estimate industry-wide baseline pollutant loadings.* EPA multiplied the site-specific baseline pollutant loadings for each pollutant of concern by the corresponding site-specific statistically-derived weighting factors discussed in the report "Statistical Summary for the MP&M Industry Surveys." EPA summed the weighted loadings across all sites in each subcategory to develop subcategory-specific baseline pollutant loadings. EPA also summed the weighted loadings across all sites to develop industry-wide baseline pollutant loadings.

Tables 12-1 and 12-2 present the results of the estimation for industry baseline pollutant loadings by subcategory for direct and indirect dischargers, respectively.

12.2.3 Option-Specific Industry Pollutant Loadings and Pollutant Reductions

Option-specific pollutant loadings (i.e., post-compliance pollutant loadings for each technology option) represent the total industry pollutant loadings after the application of each MP&M technology option. Option-specific pollutant reductions represent the total industry pollutant removals for each technology option. EPA estimated option-specific loadings and reductions as follows:

- *Estimate site-specific, option-specific pollutant loadings.* EPA used the MP&M Design and Cost Model (see Section 11.0) to estimate pollutant loadings for each site for each technology option.

- *Estimate site-specific, option-specific pollutant removals.* EPA estimated the option-specific pollutant removals as the difference between the site-specific baseline pollutant loadings and the option-specific pollutant loadings. For indirect dischargers, EPA then reduced the site-specific, option-specific pollutant removals by their corresponding POTW percent removal (see Table 12-3) to account for treatment that will occur at the POTW.

- *Estimate industry-wide, option-specific pollutant loadings and removals.* For each option, EPA multiplied the site-specific pollutant loadings and removals (accounting for POTW removals for indirect dischargers) for each pollutant of concern by the corresponding site-specific statistically-derived weighting factors discussed in the report "Statistical Summary for the MP&M Industry Surveys." EPA summed the weighted loadings and removals across all sites in each subcategory to develop subcategory-specific pollutant loadings and removals. EPA also summed the weighted loadings and removals across all sites to develop industry-wide pollutant loadings and reductions.

Tables 12-2 and 12-3 present the estimated Selected Option pollutant loadings by subcategory for direct and indirect dischargers, respectively. Tables 12-4 and 12-5 present the estimated pollutant removals by the Selected Option for direct and indirect dischargers, respectively. Tables 12-6 through 12-20 present the top pollutants removed (in toxic pound equivalents) by the Selected Option by subcategory for direct and indirect dischargers.

Table 12-1

Summary of Annual Pollutant Loadings for MP&M Direct Dischargers by Subcategory

Subcategory	Total No. of Sites	Industry Raw Wastewater Pollutant Loadings (a)			Baseline Pollutant Loadings (b)			Selected Option Pollutant Loadings (c)		
			(lbs/yr)			(lbs/yr)			(lbs/yr)	
		(lbs-eq/yr)	Priority & Nonconventional Metals/ Organics(d)	TSS/Oil and Grease (as HEM)	(lbs-eq/yr)	Priority & Nonconventional Metals/ Organics(d)	TSS/Oil and Grease (as HEM)	(lbs-eq/yr)	Priority & Nonconventional Metals/ Organics(d)	TSS/Oil and Grease (as HEM)
General Metals	3,784	6,521,910	46,976,587	115,775,867	1,248,018	10,653,897	19,050,051	133,429	1,420,008	1,161,143
Metal Finishing Job Shops	16	34,622	151,584	261,057	15,672	56,102	38,319	1,608	11,992	10,776
Non-Chromium Anodizing (e)	-	-	-	-	-	-	-	-	-	-
Printed Wiring Board	12	249,276	1,167,185	729,629	59,340	278,370	362,431	11,922	83,015	73,770
Steel Forming and Finishing	43	3,327,437	23,205,748	11,374,652	124,972	941,572	1,276,363	208,877	630,756	38,891,453
Oily Wastes	912	81,407	1,639,048	12,343,318	21,060	730,372	1,378,666	22,535	661,310	356,912
Railroad Line Maintenance (f)	34	2,145	187,605	990,500	1,128	55,611	70,158	1,267	179,157	16,021
Shipbuilding Dry Dock	6	27,903	3,393,475	8,946,211	1,815	94,772	8,515,131	1,896	95,936	102,502

Source: MP&M pollutant loadings.
(a) These raw loads do not reflect treatment currently in place.
(b) These baseline loads reflect treatment currently in place.
(c) These loads reflect the load after the implementation of the MP&M technology basis for each subcategory.
(d) Does not include sodium, calcium, total dissolved solids, and potassium.
(e) EPA's data collection efforts did not identify any direct discharging non-chromium anodizing facilities.
(f) The baseline and the Selected Option pollutant loadings for BOD_5 for Railroad Line Maintenance is 59,814 and 57,150 lbs/yr, respectively.

Table 12-2

Summary of Annual Pollutant Loadings for MP&M Indirect Dischargers by Subcategory[(a)]

Subcategory	Total No. of Sites	Industry Raw Wastewater Pollutant Loadings (b)			Baseline Pollutant Loadings (c)			Selected Option Pollutant Loadings (d,e)		
			(lbs/yr)			(lbs/yr)			(lbs/yr)	
		(lbs-eq/yr)	Priority & Nonconventional Metals/ Organics (f)	TSS/Oil and Grease (as HEM)	(lbs-eq/yr)	Priority & Nonconventional Metals/ Organics (f)	TSS/Oil and Grease (as HEM)	(lbs-eq/yr)	Priority & Nonconventional Metals/ Organics (f)	TSS/Oil and Grease (as HEM)
General Metals	26,195	116,275,842	555,129,426	737,700,419	23,804,767	155,478,167	398,844,708	1,241,465	11,732,601	11,082,451
Metal Finishing Job Shops	1,515	20,417,884	38,428,372	15,780,889	5,598,845	12,741,874	10,406,023	118,988	1,015,185	813,455
Non-Chromium Anodizing	191	122,359	869,757	1,718,224	117,647	808,018	1,473,802	NR	NR	NR
Printed Wiring Board	621	5,732,973	21,773,732	26,175,775	2,727,103	9,103,518	20,019,186	149,959	1,226,487	941,657
Steel Forming and Finishing	111	1,248,907	9,120,891	6,328,042	400,524	2,667,746	1,045,957	104,606	336,249	22,531,113
Oily Wastes	28,514	1,002,116	17,206,229	75,298,418	496,626	13,396,099	24,366,355	506,597	3,333,132	4,822,848
Railroad Line Maintenance	799	3,794	40,084	10,463,731	1,712	14,759	71,136	NR	NR	NR
Shipbuilding Dry Dock	6	397	38,542	13,482	257	25,984	5,356	NR	NR	NR

Source: MP&M pollutant loadings.
NR - Not regulated. EPA is not proposing to regulate these sites under the MP&M rule.
(a) These loads do not reflect removals by publicly owned treatment works (see Table 12-4 for incorporation of POTW removals).
(b) These raw loads do not reflect treatment currently in place.
(c) These baseline loads reflect treatment currently in place.
(d) These loads include only those for the regulated sites; this accounts for 3,056 General Metals facilities discharging greater than 1 MGY and 226 Oily Wastes facilities discharging greater than 2 MGY.
(e) These loads reflect the load after the implementation of the MP&M technology basis for each subcategory.
(f) Does not include sodium, calcium, total dissolved solids, and potassium.

Table 12-3

Publicly Owned Treatment Works (POTW) Removal Percents For Each MP&M Pollutants of Concern

Chemical Name	POTW Removal Percent	Source[a-c]
1,1,1-Trichloroethane	90.45	a
1,1-Dichloroethane	70	a
1,1-Dichloroethene	77.51	c
1,4-Dioxane	45.8	b
1-Bromo-2-Chlorobenzene	77.32	c
1-Bromo-3-Chlorobenzene	77.32	c
1-Methylfluorene	84.55	b
1-Methylphenanthrene	84.55	b
2,4-Dimethylphenol	77.51	c
2,4-Dinitrophenol	77.51	c
2,6-Dinitrotoluene	77.51	c
2-Butanone	96.6	b
2-Hexanone	77.32	c
2-Isopropylnaphthalene	77.32	c
2-Methylnaphthalene	28	b
2-Nitrophenol	26.83	a
2-Propanone	83.75	b
3,6-Dimethylphenanthrene	84.55	b
4-Chloro-3-Methylphenol	63	b
4-Methyl-2-Pentanone	87.87	b
4-Nitrophenol	77.51	c
Acenaphthene	98.29	a
Acetophenone	95.34	b
Acrolein	77.51	c
Alpha-Terpineol	94.4	b
Aluminum	91.36	a
Amenable Cyanide	57.41	c
Ammonia As Nitrogen	38.94	a
Aniline	93.41	b

Table 12-3 (Continued)

Chemical Name	POTW Removal Percent	Source[a-c]
Anthracene	77.51	c
Antimony	66.78	a
Arsenic	65.77	a
Barium	15.98	a
Benzoic Acid	80.5	b
Benzyl Alcohol	78	b
Beryllium	71.66	c
Biphenyl	96.28	b
Bis(2-Ethylhexyl) Phthalate	59.78	a
Bod 5-Day (Carbonaceous)	89.12	a
Boron	30.42	a
Butyl Benzyl Phthalate	81.65	a
Cadmium	90.05	a
Calcium	8.54	a
Carbon Disulfide	84	b
Chemical Oxygen Demand (COD)	81.3	a
Chloride	57.41	c
Chlorobenzene	96.37	a
Chloroethane	77.51	c
Chloroform	73.44	a
Chromium	80.33	a
Cobalt	6.11	a
Copper	84.2	a
Cyanide	70.44	a
Di-N-Butyl Phthalate	84.66	a
Di-N-Octyl Phthalate	68.43	a
Dibenzofuran	77.32	c
Dibenzothiophene	84.68	b
Dimethyl Phthalate	77.51	c
Diphenyl Ether	77.32	c
Diphenylamine	77.32	c
Ethylbenzene	93.79	a

Table 12-3 (Continued)

Chemical Name	POTW Removal Percent	Source[a-c]
Fluoranthene	42.46	a
Fluorene	69.85	a
Fluoride	61.35	
Gold	32.52	c
Hexanoic Acid	84	b
Hexavalent Chromium	57.41	c
Iron	81.99	a
Isobutyl Alcohol	28	b
Isophorone	77.51	c
Lead	77.45	a
M+P Xylene	77.32	c
M-Xylene	95.07	b
Magnesium	14.14	a
Manganese	35.51	a
Mercury	71.66	c
Methyl Methacrylate	99.96	b
Methylene Chloride	54.28	a
Molybdenum	18.93	a
N,N-Dimethylformamide	87	b
N-Decane	9	b
N-Docosane	88	b
N-Dodecane	95.05	b
N-Eicosane	92.4	b
N-Hexacosane	71.11	b
N-Hexadecane	71.11	b
N-Nitrosodimethylamine	77.51	c
N-Nitrosodiphenylamine	90.11	b
N-Nitrosopiperidine	77.32	c
N-Octacosane	71.11	b
N-Octadecane	71.11	b
N-Tetracosane	71.11	b
N-Tetradecane	71.11	b

Table 12-3 (Continued)

Chemical Name	POTW Removal Percent	Source[a-c]
N-Triacontane	77.32	c
Naphthalene	94.69	a
Nickel	51.44	a
O+P Xylene	65.4	b
O-Cresol	52.5	b
O-Xylene	77.32	c
Oil And Grease (As HEM)	86.08	a
P-Cresol	71.67	b
P-Cymene	99.79	b
Phenanthrene	94.89	a
Phenol	95.25	a
Phosphorus	32.52	c
Pyrene	83.9	b
Pyridine	95.4	b
Selenium	34.33	b
Silver	88.28	a
Sodium	2.69	a
Styrene	93.65	b
Sulfate	84.61	b
Tetrachloroethene	84.61	a
Thallium	71.66	c
Tin	42	a
Titanium	91.82	a
Toluene	96.18	a
Total Dissolved Solids	8	b
Total Kjeldahl Nitrogen	57.41	c
Total Organic Carbon (TOC)	70.28	a
Total Petroleum Hydrocarbons (As SGT-HEM)	57.41	c
Total Phosphorus	57.41	c
Total Recoverable Phenolics	57.41	c
Total Sulfide	57.41	c
Total Suspended Solids	89.55	a

Table 12-3 (Continued)

Chemical Name	POTW Removal Percent	Source[a-c]
Trichloroethene	77.51	c
Trichlorofluoromethane	77.32	c
Tripropyleneglycol Methyl Ether	52.4	b
Vanadium	9.51	a
Weak-Acid Dissociable Cyanide	57.41	c
Yttrium	32.52	c
Zinc	79.14	a

Note: See public record for further detail for the sources.
[a] November 5, 1999 Updated 50-POTW Study. Influent Concentration 10xML, 5xML, then 20 ppb.
[b] RREL Database. Compiled for the CWT effluent guideline or the 1995 Phase I Proposal.
[c] Average POTW removals calculated by classification code from sources a and b.

Table 12-4

Summary of Annual Pollutant Reductions for MP&M Direct Dischargers by Subcategory [a,b]

Subcategory	Total No. of Regulated Sites	Baseline Pollutant Loadings		Pollutant Removals by Selected Option		% Reduction from Baseline (lb-eq/yr)
		lb-eq/yr	lbs/yr (c)	lb-eq/yr	lbs/yr (c)	
General Metals	3,795	1,248,018	29,703,949	1,123,797	27,224,783	90.0%
Metal Finishing Job Shops	16	15,672	94,422	14,377	71,766	91.7%
Non-Chromium Anodizer	NA (d)	-	-	-	-	-
Printed Wiring Board	12	59,340	640,801	48,366	485,395	81.5%
Steel Forming and Finishing	43	124,972	2,217,935	85,070	1,448,450	68.1%
Oily Wastes	912	21,060	2,109,039	9,899	1,441,671	47.0%
Railroad Line Maintenance	34	1,128	125,770	154	57,538	13.6%
Shipbuilding Dry Dock	6	1,815	8,609,903	111	8,453,293	6.1%

Source: MP&M pollutant loadings.
(a) Pollutant loadings and removal estimates presented in this table will not equate with those presented in the Cost-Effectiveness Analysis and the EEBA. The estimates in those documents do not include pollutant loadings from facilities that are projected to close in the baseline.
(b) See Tables 12-6 through 12-12 for pollutant-specific removals by subcategory.
(c) Does not include sodium, calcium, total dissolved solids, chemical oxygen demand, and potassium.
(d) EPA's data collection efforts did not identify any direct discharging non-chromium anodizing facilities.

Table 12-5

Summary of Annual Pollutant Reductions for MP&M Indirect Dischargers by Subcategory [a,b]

Subcategory	Total No. of Regulated Sites	Baseline Pollutant Loadings		Pollutant Removals by Selected Option (c)		% Reduction from Baseline (lb-eq/yr)
		lb-eq/yr	lbs/yr (d)	lb-eq/yr	lbs/yr (d)	
General Metals	3,795	21,859,748	508,792,176	5,513,689	75,222,259	25.2%
Metal Finishing Job Shops	16	5,598,845	23,147,897	1,626,502	4,595,928	29.1%
Non-Chromium Anodizer	NA (e)	-	-	-	-	-
Printed Wiring Board	12	2,727,103	29,122,704	920,640	5,128,256	33.8%
Steel Forming and Finishing	43	400,524	3,713,703	115,624	731,264	28.9%
Oily Wastes	912	257,894	12,942,097	36,866	1,471,328	14.3%
Railroad Line Maintenance	NA (4)	-	-	-	-	-
Shipbuilding Dry Dock	NA (4)	-	-	-	-	-

Source: MP&M pollutant loadings.
(a) Pollutant loadings and removal estimates presented in this table will not equate with those presented in the Cost-Effectiveness Analysis and the EEBA. The estimates in those documents do not include pollutant loadings from facilities that are projected to close in the baseline.
(b) See Tables 12-13 through 12-20 for pollutant-specific removals for each subcategory.
(c) These removals account for removals by publicly owned treatment works for each pollutant for the Selected Option.
(d) Does not include sodium, calcium, total dissolved solids, chemical oxygen demand and potassium.
(e) EPA is not proposing pretreatment standards for these subcategories.

Table 12-6

Top Pollutants Removed by Proposed Option for General Metals Direct Dischargers

Pollutant Name	Toxic Pound Equivalents Removed (lb-eq/yr)	Pounds Removed (lb/yr)
TOTAL SULFIDE	421,356	150,484
TIN	251,019	836,729
COPPER	242,366	384,707
CYANIDE	202,008	183,644
SILVER	119,080	7,442
BORON	82,034	455,746
LEAD	62,838	28,563
MOLYBDENUM	25,118	125,590
ALUMINUM	19,104	298,496
ZINC	15,234	324,130
ANTHRACENE	14,466	5,786
NICKEL	14,075	127,953
CHROMIUM	10,602	139,495
CADMIUM	10,317	3,968
HEXAVALENT CHROMIUM	8,309	16,293
MANGANESE	7,814	111,630
ANILINE	7,640	5,457
IRON	5,338	953,206
FLUORANTHENE	4,643	5,804
FLUORIDE	4,496	128,464
FLUORENE	4,051	5,787
BIS(2-ETHYLHEXYL) PHTHALATE	3,080	32,421
ACROLEIN	3,076	3,171
N-NITROSODIMETHYLAMINE	1,771	25,302
PHENANTHRENE	1,703	5,873
3,6-DIMETHYLPHENANTHRENE	1,596	5,910
CARBON DISULFIDE	1,482	529
DI-N-OCTYL PHTHALATE	1,272	5,781
DIBENZOFURAN	1,091	5,455

Table 12-6 (Continued)

Pollutant Name	Toxic Pound Equivalents Removed (lb-eq/yr)	Pounds Removed (lb/yr)
BENZOIC ACID	997	3,019,908
SELENIUM	910	827
AMMONIA AS NITROGEN	817	326,833
2,6-DINITROTOLUENE	645	6,449
PYRENE	637	5,786
N-TETRADECANE	619	143,925
1-METHYLPHENANTHRENE	610	6,102
ARSENIC	543	155

Source: MP&M pollutant loadings.

Table 12-7

Top Pollutants Removed by Proposed Option for Metal Finishing Job Shops Direct Dischargers

Pollutant Name	Toxic Pound Equivalents Removed (lb-eq/yr)	Pounds Removed (lb/yr)
CYANIDE	6,257	5,688
TIN	3,508	11,694
COPPER	2,496	3,962
TOTAL SULFIDE	2,133	762
NICKEL	585	5,316
BORON	356	1,976
CHROMIUM	246	3,239
LEAD	179	81
ANTHRACENE	157	63
ZINC	94	2,008
ANILINE	88	63
HEXAVALENT CHROMIUM	77	150
FLUORANTHENE	50	63
FLUORENE	44	63
ACROLEIN	39	40
SILVER	37	2
MOLYBDENUM	35	174
ALUMINUM	30	475
PHENANTHRENE	18	63
3,6-DIMETHYLPHENANTHRENE	17	64
IRON	17	3,038
DI-N-OCTYL PHTHALATE	14	63
DIBENZOFURAN	13	63
MANGANESE	11	154
CADMIUM	9	4
FLUORIDE	8	215
BIS(2-ETHYLHEXYL) PHTHALATE	7	74
N-NITROSODIMETHYLAMINE	7	100
PYRENE	7	63
AMMONIA AS NITROGEN	7	2,756

Table 12-7 (Continued)

Pollutant Name	Toxic Pound Equivalents Removed (lb-eq/yr)	Pounds Removed (lb/yr)
2,6-DINITROTOLUENE	6	65
1-METHYLPHENANTHRENE	6	65
2-METHYLNAPHTHALENE	5	61
2-ISOPROPYLNAPHTHALENE	5	66
N-NITROSODIPHENYLAMINE	4	102
1-METHYLFLUORENE	3	62
DIBENZOTHIOPHENE	3	63

Source: MP&M pollutant loadings.

Table 12-8

Top Pollutants Removed by Proposed Option for Printed Wiring Board Direct Dischargers

Pollutant Name	Toxic Pound Equivalents Removed (lb-eq/yr)	Pounds Removed (lb/yr)
TIN	23,886	79,619
TOTAL SULFIDE	16,121	5,757
COPPER	14,562	23,114
CARBON DISULFIDE	3,311	1,183
NICKEL	2,155	19,593
CYANIDE	1,487	1,351
LEAD	1,013	460
BORON	623	3,460
ZINC	263	5,594
ALUMINUM	208	3,244
IRON	176	31,420
MOLYBDENUM	155	774
CHROMIUM	146	1,926
MANGANESE	76	1,083
SILVER	57	4
ACROLEIN	56	57
ANTHRACENE	43	17
AMMONIA AS NITROGEN	43	17,090
FLUORIDE	30	870
ARSENIC	26	7
ANILINE	24	17
FLUORANTHENE	14	17
FLUORENE	12	17
TITANIUM	10	335
COBALT	7	59
N-NITROSODIMETHYLAMINE	6	88
BENZOIC ACID	6	17,689
PHENANTHRENE	5	17
BIS(2-ETHYLHEXYL) PHTHALATE	5	50
3,6-DIMETHYLPHENANTHRENE	5	17
DI-N-OCTYL PHTHALATE	4	17
DIBENZOFURAN	3	17
1,1-DICHLOROETHENE	3	16
SULFATE	3	474,868

Source: MP&M pollutant loadings.

Table 12-9

Top Pollutants Removed by Proposed Option for Steel Forming and Finishing Direct Dischargers

Pollutant Name	Toxic Pound Equivalents Removed (lb-eq/yr)	Pounds Removed (lb/yr)
TOTAL SULFIDE	252,728	90,260
TIN	29,991	99,970
COPPER	23,848	37,854
BORON	11,125	61,804
LEAD	4,515	2,052
NICKEL	2,365	21,501
SILVER	2,209	138
ALUMINUM	1,899	29,672
CYANIDE	1,228	1,116
CHROMIUM	1,117	14,701
FLUORIDE	924	26,392
ACROLEIN	911	939
ANTHRACENE	864	346
ZINC	843	17,935
CARBON DISULFIDE	575	205
ANILINE	438	313
MOLYBDENUM	298	1,490
MANGANESE	293	4,193
FLUORANTHENE	273	342
ARSENIC	250	71
FLUORENE	239	342
VANADIUM	214	346
SELENIUM	172	156
AMMONIA AS NITROGEN	160	64,119
IRON	132	23,646
CHLORIDE	119	4,939,545
N-NITROSODIMETHYLAMINE	111	1,588
3,6-DIMETHYLPHENANTHRENE	107	398

Table 12-9 (Continued)

Pollutant Name	Toxic Pound Equivalents Removed (lb-eq/yr)	Pounds Removed (lb/yr)
MERCURY	103	1
PHENANTHRENE	103	353
BIS(2-ETHYLHEXYL) PHTHALATE	94	984
DI-N-OCTYL PHTHALATE	75	341
DIBENZOFURAN	63	313
MAGNESIUM	59	67,510
HEXAVALENT CHROMIUM	51	100
2,6-DINITROTOLUENE	50	500

Source: MP&M pollutant loadings.

Table 12-10

Top Pollutants Removed by Proposed Option for Oily Wastes Direct Dischargers

Pollutant Name	Toxic Pound Equivalents Removed (lb-eq/yr)	Pounds Removed (lb/yr)
TOTAL SULFIDE	6,141	2,193
LEAD	1,973	897
BORON	1,556	8,643
COPPER	1,160	1,842
MOLYBDENUM	865	4,325
SILVER	823	51
CADMIUM	709	273
ANTHRACENE	646	258
ALUMINUM	312	4,870
ANILINE	288	206
FLUORANTHENE	207	259
IRON	196	34,979
FLUORENE	181	258
ZINC	170	3,607
PHENANTHRENE	77	266
ACROLEIN	64	66
3,6-DIMETHYLPHENANTHRENE	63	235
DI-N-OCTYL PHTHALATE	63	285
N-NITROSODIMETHYLAMINE	56	800
DIBENZOFURAN	41	206
NICKEL	36	325
BENZOIC ACID	36	108,125
BIS(2-ETHYLHEXYL) PHTHALATE	35	372
2,6-DINITROTOLUENE	29	289
PYRENE	28	258
TIN	21	71
ARSENIC	20	6
2-ISOPROPYLNAPHTHALENE	20	271
MAGNESIUM	18	20,363
FLUORIDE	17	487
N-NITROSODIPHENYLAMINE	17	421
2-METHYLNAPHTHALENE	16	202
CHROMIUM	16	207
1-METHYLPHENANTHRENE	13	127
MANGANESE	12	170

Source: MP&M pollutant loadings.

Table 12-11

Top Pollutants Removed by Proposed Option for Railroad Line Maintenance Direct Dischargers

Pollutant Name	Toxic Pound Equivalents Removed (lb-eq/yr)	Pounds Removed (lb/yr)
BORON	87	485
LEAD	24	11
TOTAL SULFIDE	21	7.332
ALUMINUM	9.036	141
SILVER	7.803	0.488
TIN	5.876	20
CADMIUM	4.975	1.914
COPPER	4.541	7.208
IRON	1.746	312
ZINC	1.551	33
MANGANESE	1.396	20
ANTHRACENE	0.909	0.364
ANILINE	0.868	0.620
MOLYBDENUM	0.490	2.451
CHROMIUM	0.490	6.443
NICKEL	0.296	2.695
FLUORANTHENE	0.291	0.364
N-NITROSODIMETHYLAMINE	0.279	3.982
FLUORENE	0.255	0.364
TITANIUM	0.197	6.777
3,6-DIMETHYLPHENANTHRENE	0.181	0.672
2-METHYLNAPHTHALENE	0.128	1.598
DIBENZOFURAN	0.124	0.620
PHENANTHRENE	0.107	0.368
1-METHYLPHENANTHRENE	0.100	1.003
BIS(2-ETHYLHEXYL) PHTHALATE	0.082	0.860
VANADIUM	0.068	0.110
2-ISOPROPYLNAPHTHALENE	0.058	0.799
N-NITROSODIPHENYLAMINE	0.051	1.268
DI-N-OCTYL PHTHALATE	0.050	0.228

Source: MP&M pollutant loadings.

Table 12-12

Top Pollutants Removed by Proposed Option for Shipbuilding Dry Dock Direct Dischargers

Pollutant Name	Toxic Pound Equivalents Removed (lb-eq/yr)	Pounds Removed (lb/yr)
CHROMIUM	63	832
MANGANESE	36	515
NICKEL	7.71	70
MOLYBDENUM	3.53	17.64
BENZOIC ACID	0.235	712
1-METHYLPHENANTHRENE	0.041	0.409

Source: MP&M pollutant loadings.

Table 12-13

Top Pollutants Removed by Proposed Option for General Metals Indirect Dischargers[a]

Pollutant Name	Toxic Pound Equivalents Removed (lb-eq/yr)	Pounds Removed (lb/yr)
COPPER	1,792,625	2,845,436
TOTAL SULFIDE	1,383,215	494,006
TIN	1,212,529	4,041,764
BORON	559,185	3,106,581
LEAD	527,231	239,651
NICKEL	315,515	2,868,315
CYANIDE	312,109	283,735
MOLYBDENUM	241,330	1,206,652
MANGANESE	229,618	3,280,260
FLUORIDE	126,412	3,611,778
VANADIUM	57,919	93,417
ZINC	44,761	952,356
CHROMIUM	42,165	554,801
ALUMINUM	40,314	629,903
IRON	34,230	6,112,555
SILVER	26,973	1,686
ANTHRACENE	11,743	4,697
CADMIUM	10,250	3,942
AMMONIA AS NITROGEN	10,126	4,050,566
FLUORANTHENE	9,817	12,271
ARSENIC	4,871	1,392
COBALT	4,444	40,402
FLUORENE	4,423	6,319
SELENIUM	4,179	3,800
HEXAVALENT CHROMIUM	3,380	6,628
ACROLEIN	2,665	2,748
TITANIUM	2,577	88,874
BIS(2-ETHYLHEXYL) PHTHALATE	2,531	26,643
BENZOIC ACID	2,180	6,607,285
ANILINE	1,792	1,280
MAGNESIUM	1,787	2,053,495
CARBON DISULFIDE	1,714	612

Table 12-13 (continued)

Pollutant Name	Toxic Pound Equivalents Removed (lb-eq/yr)	Pounds Removed (lb/yr)
CHLORIDE	1,594	66,435,600
DI-N-OCTYL PHTHALATE	1,481	6,731
N-NITROSODIMETHYLAMINE	1,447	20,669
2-METHYLNAPHTHALENE	1,290	16,126
3,6-DIMETHYLPHENANTHRENE	954	3,532
THALLIUM	923	923
DIBENZOFURAN	872	4,358
2,6-DINITROTOLUENE	569	5,693

Source: MP&M pollutant loadings.
(a) The Proposed Option for General Metals indirect dischargers includes only those facilities that discharge greater than 1 MGY of process wastewater.

Table 12-14

Top Pollutants Removed by Proposed Option for Metal Finishing Job Shops Indirect Dischargers

Pollutant Name	Toxic Pound Equivalents Removed (lb-eq/yr)	Pounds Removed (lb/yr)
CYANIDE	1,113,405	1,012,187
TIN	242,337	807,789
COPPER	148,476	235,676
TOTAL SULFIDE	122,061	43,593
BORON	44,719	248,436
NICKEL	25,840	234,910
LEAD	11,537	5,244
CHROMIUM	7,741	101,853
MANGANESE	7,186	102,654
FLUORIDE	5,055	144,432
SILVER	4,598	287
ZINC	4,149	88,282
CADMIUM	3,681	1,416
IRON	2,930	523,164
MOLYBDENUM	2,700	13,498
CARBON DISULFIDE	2,647	945
HEXAVALENT CHROMIUM	1,266	2,483
ALUMINUM	1,219	19,053
AMMONIA AS NITROGEN	964	385,723
VANADIUM	605	977
ANTHRACENE	440	176
FLUORANTHENE	360	450
ARSENIC	277	79
ACROLEIN	272	280
THALLIUM	185	185
FLUORENE	165	236
COBALT	164	1,488
CHLORIDE	150	6,256,880
SELENIUM	92	84
BIS(2-ETHYLHEXYL) PHTHALATE	81	851

Table 12-14 (Continued)

Pollutant Name	Toxic Pound Equivalents Removed (lb-eq/yr)	Pounds Removed (lb/yr)
TITANIUM	78	2,676
ANILINE	71	51
MAGNESIUM	59	68,292
N-NITROSODIMETHYLAMINE	58	832
2-METHYLNAPHTHALENE	56	695
DI-N-OCTYL PHTHALATE	54	247

Source: MP&M pollutant loadings.

Table 12-15

Top Pollutants Removed by Option 2 for Non-Chromium Anodizing Indirect Dischargers[a]

Pollutant Name	Toxic Pound Equivalents Removed (lb-eq/yr)	Pounds Removed (lb/yr)
NICKEL	3,218	29,251
MANGANESE	2,393	34,185
BORON	1,917	10,652
TOTAL SULFIDE	1,028	367
ZINC	966	20,552
FLUORIDE	350	9,999
ALUMINUM	267	4,165
COPPER	71	112
CADMIUM	44	17
TIN	39	129
IRON	22	3,868
ANTHRACENE	15	6
FLUORANTHENE	12	15
CHROMIUM	9	122
MAGNESIUM	6	6,833
FLUORENE	5	8
ACROLEIN	5	5

Source: MP&M pollutant loadings.
(a) EPA is not proposing pretreatment standards for all indirect discharging facilities in the Non-Chromium Anodizing subcategory. Therefore, the removals are presented only for informational purposes.

Table 12-16

Top Pollutants Removed by Proposed Option for Printed Wiring Board Indirect Dischargers

Pollutant Name	Toxic Pound Equivalents Removed (lb-eq/yr)	Pounds Removed (lb/yr)
TIN	468,973	1,563,245
TOTAL SULFIDE	257,025	91,795
CYANIDE	253,216	230,197
COPPER	104,235	165,453
NICKEL	39,774	361,578
LEAD	23,781	10,810
BORON	14,805	82,250
MANGANESE	4,067	58,107
CHROMIUM	2,374	31,243
ZINC	2,090	44,460
IRON	1,732	309,307
FLUORIDE	1,568	44,797
CARBON DISULFIDE	1,510	539
ALUMINUM	1,164	18,187
AMMONIA AS NITROGEN	1,065	425,901
SILVER	740	46
MOLYBDENUM	701	3,507
COBALT	247	2,247
ANTHRACENE	245	98
FLUORANTHENE	200	250
ACROLEIN	112	116
FLUORENE	92	131
VANADIUM	69	111
CADMIUM	66	25
SELENIUM	63	57
TITANIUM	48	1,664
ANILINE	40	28
CHLORIDE	36	1,515,053
N-NITROSODIMETHYLAMINE	34	489
DI-N-OCTYL PHTHALATE	30	137
HEXAVALENT CHROMIUM	26	52
BIS(2-ETHYLHEXYL) PHTHALATE	24	252
2-METHYLNAPHTHALENE	23	286
MAGNESIUM	21	24,041

Source: MP&M pollutant loadings.

Table 12-17

Top Pollutants Removed by Proposed Option for Steel Forming and Finishing Indirect Dischargers

Pollutant Name	Toxic Pound Equivalents Removed (lb-eq/yr)	Pounds Removed (lb/yr)
TIN	68,545	228,482
TOTAL SULFIDE	53,018	18,935
COPPER	37,074	58,848
BORON	4,355	24,193
FLUORIDE	3,093	88,365
IRON	1,425	254,463
NICKEL	1,229	11,174
ZINC	522	11,104
AMMONIA AS NITROGEN	359	143,769
VANADIUM	295	476
CHROMIUM	290	3,812
ANTHRACENE	270	108
LEAD	257	117
MANGANESE	250	3,565
FLUORANTHENE	221	276
CYANIDE	199	181
CHLORIDE	160	6,684,396
MOLYBDENUM	118	591
FLUORENE	101	145
ALUMINUM	72	1,122
TITANIUM	42	1,436
DI-N-OCTYL PHTHALATE	33	152
ANILINE	28	20
ACROLEIN	28	29
SELENIUM	26	24
SILVER	25	2
ARSENIC	22	6
COBALT	21	187
BIS(2-ETHYLHEXYL) PHTHALATE	19	202
2-METHYLNAPHTHALENE	17	216

Table 12-17 (Continued)

Pollutant Name	Toxic Pound Equivalents Removed (lb-eq/yr)	Pounds Removed (lb/yr)
CADMIUM	16	6
MAGNESIUM	15	16,829
DIBENZOFURAN	14	69
3,6-DIMETHYLPHENANTHRENE	13	48
2,6-DINITROTOLUENE	11	111
N-NITROSODIMETHYLAMINE	11	158

Source: MP&M pollutant loadings.

Table 12-18

Top Pollutants Removed by Proposed Option for Oily Wastes Indirect Dischargers[a]

Pollutant Name	Toxic Pound Equivalents Removed (lb-eq/yr)	Pounds Removed (lb/yr)
TOTAL SULFIDE	40,158	14,342
MOLYBDENUM	35,485	177,425
BENZOIC ACID	366	1,108,465
LEAD	166	75
COPPER	137	217
ANTHRACENE	117	47
FLUORANTHENE	96	120
CADMIUM	93	36
SELENIUM	89	81
FLUORENE	44	63
ARSENIC	34	10
ZINC	33	710
NICKEL	26	236
IRON	25	4,411
BIS(2-ETHYLHEXYL) PHTHALATE	20	216
DI-N-OCTYL PHTHALATE	14	66
2-METHYLNAPHTHALENE	14	178
ANILINE	14	10
ACROLEIN	10	11
ALUMINUM	8	119
MAGNESIUM	7	7,949
3,6-DIMETHYLPHENANTHRENE	7	26
DIBENZOFURAN	7	33
CHROMIUM	6	82
N-NITROSODIMETHYLAMINE	6	86
2,6-DINITROTOLUENE	5	54
N-TETRADECANE	5	1,204
PYRENE	4	34
2-ISOPROPYLNAPHTHALENE	3	47
PHENANTHRENE	3	11
1-METHYLPHENANTHRENE	3	27
MANGANESE	2	30

Source: MP&M pollutant loadings.
(a) The Proposed Option for Oily Wastes indirect dischargers includes only those facilities that discharge greater than 2 MGY of process wastewater. The pollutant removals on this table reflect those associated with the Selected Option.

Table 12-19

Top Pollutants Removed by Option 10 for Railroad Line Maintenance Indirect Dischargers

Pollutant Name	Toxic Pound Equivalents Removed (lb-eq/yr)	Pounds Removed (lb/yr)
LEAD	2.67	1.21
MANGANESE	2.13	30.4
ANTHRACENE	2.13	0.85
FLUORANTHENE	1.74	2.18
TIN	1.39	4.62
COPPER	1.00	1.59
BORON	0.801	4.45
FLUORENE	0.798	1.14
FLUORIDE	0.527	15.1
CADMIUM	0.427	0.164
SILVER	0.299	0.019
SELENIUM	0.274	0.249
DI-N-OCTYL PHTHALATE	0.221	1.00
ALUMINUM	0.216	3.38
MERCURY	0.214	0.002
ANILINE	0.208	0.149
ZINC	0.192	4.09
MOLYBDENUM	0.190	0.950
VANADIUM	0.184	0.296
2-METHYLNAPHTHALENE	0.147	1.84
CARBON DISULFIDE	0.140	0.050
NICKEL	0.124	1.13
IRON	0.120	21.4
BIS(2-ETHYLHEXYL) PHTHALATE	0.115	1.21
ARSENIC	0.114	0.032
HEXAVALENT CHROMIUM	0.106	0.208
DIBENZOFURAN	0.102	0.512
3,6-DIMETHYLPHENANTHRENE	0.094	0.346
COBALT	0.086	0.780
2,6-DINITROTOLUENE	0.085	0.850
N-NITROSODIMETHYLAMINE	0.073	1.05
PYRENE	0.067	0.609
ACROLEIN	0.066	0.068
PHENANTHRENE	0.056	0.193

Source: MP&M pollutant loadings.

Table 12-20

Top Pollutants Removed by Option 10 for Shipbuilding Dry Dock Indirect Dischargers

Pollutant Name	Toxic Pound Equivalents Removed (lb-eq/yr)	Pounds Removed (lb/yr)
BORON	26.1	145
MOLYBDENUM	0.062	0.309
MANGANESE	0.030	0.426

Source: MP&M pollutant loadings.

13.0 NON-WATER QUALITY IMPACTS

Sections 304(b) and 306 of the Clean Water Act require EPA to consider non-water quality environmental impacts (including energy requirements) associated with effluent limitations guidelines and standards. To comply with these requirements, EPA considered the potential impact of the proposed MP&M rule on energy consumption, air emissions, and solid waste generation. A discussion of the proposed technology options is given in Section 14 of this document.

Considering energy use and environmental impacts across all media, the Agency has determined that the impacts identified in this section are justified by the benefits associated with compliance with the proposed limitations and standards.

Section 13.1 discusses the energy requirements for implementing wastewater treatment technologies at MP&M facilities. Section 13.2 presents the impact of the proposed technologies on air emissions, and section 13.3 discusses the impact on wastewater treatment sludge and waste oil generation.

13.1 Energy Requirements

EPA estimates that compliance with this rule will result in a net increase in energy consumption at MP&M facilities. Table 13-1 presents estimates of energy usage by technology option.

Table 13-1

Energy Usage by Option

Option	Incremental Energy Required[a] (10^6 kilowatt hrs/yr)
Basic Technology (Options 1, 5, and 9)	181
Basic Technology with Water Conservation and Pollution Prevention (Options 2, 6, and 10)	208
Advanced Technology (Options 3 and 7)	1,747
Advanced Technology with Water Conservation and Pollution Prevention (Options 4 and 8)	1,736
Selected Option for Existing Sources[b] (Options 2, 6, and 10 with flow cutoffs)	116

Source: MP&M Design and Cost Model output.
[a] The amount of additional energy required (from baseline) if the technology option is implemented, summed for all regulated facilities.
[b] The Selected Option for Existing Sources regulates fewer MP&M facilities than other options shown in the table due to flow cutoffs (see Section 14).

For the Basic Technology option, EPA found that options with pollution prevention and water conservation practices (Options 2, 6, 10) may use slightly more additional energy as compared to those without pollution prevention and water conservation (Options 1, 5, 9). This may be due to the number of facilities that have the Basic Technology option treatment in place prior to the regulation (leading to a smaller incremental energy requirement) compared to the number of facilities that have pollution prevention and water conservation in place prior to the regulation (leading to a higher incremental energy requirement). Note that the reverse is true for the Advanced Technology option. However, the Advanced Technology option (with or without pollution prevention) consumes much more additional energy than the basic option.

The Advanced Technology options (3/7 and 4/8) include ultrafiltration and microfiltration technologies which require significant amounts of energy in comparison to the oil/water separators and clarifiers required for Basic Technology options (1/5/9 and 2/6/10). The Selected Option for Existing Sources requires the least amount of additional energy consumption because fewer MP&M facilities will be affected than other options shown in the table due to proposed flow cutoffs. (See Section 14 for a discussion of flow cutoffs).

Approximately 3,123 billion kilowatt hours of electric power were generated in the United States in 1997 (1). Additional energy requirements to implement EPA's proposed option correspond to approximately 0.01 percent of the national requirements. The increase in energy requirements due to the implementation of MP&M technologies will in turn cause an air emissions impact from the electric power generation facilities providing the additional energy. EPA expects the increase in air emissions to be minimal as it is proportional to the increase in energy requirements, or approximately 0.01 percent.

13.2 Air Emissions Impacts

The Agency believes that the in-process and end-of-pipe technologies included in the technology options for this rule do not generate significant air emissions.

EPA is developing National Emission Standards for Hazardous Air Pollutants (NESHAPs) under Section 112 of the Clean Air Act (CAA) to address air emissions of the hazardous air pollutants (HAPs) listed in Title III of the CAA Amendments of 1990 (CAAA). Below is a list of current and upcoming NESHAPs that may potentially affect HAP-emitting activities at MP&M sites:

- Chromium Emissions from Hard and Decorative Chromium Electroplating and Chromium Anodizing Tanks - Proposed December 16, 1993 and promulgated on January 25, 1995;

- Halogenated Solvent Cleaning - Proposed November 29, 1993 and promulgated on December 2, 1994;

- Aerospace Manufacturing - Proposed June 6, 1994 and promulgated on July 31, 1995;
- Shipbuilding and Ship Repair (Surface Coating);
- Large Appliances (Surface Coating);
- Metal Furniture (Surface Coating);
- Automobile and Light-Duty Truck Manufacturing (Surface Coating); and
- Miscellaneous Metal Parts and Products (Surface Coating) - scheduled for promulgation on November 15, 2000.

These NESHAPs define the maximum achievable control technology (MACT) for emissions of HAPS. Like effluent guidelines, MACT standards are technology-based. The CAAA set maximum control requirements on which MACT can be based for new and existing sources.

Halogenated HAP solvents (e.g., methylene chloride, perchloroethylene, trichloroethylene, 1,1,1-trichloroethane, carbon tetrachloride, and chloroform) used for cleaning in the MP&M industry can be a source of hazardous air emissions. EPA believes the proposed MP&M rule will not affect the use of solvents containing halogenated hazardous air pollutants in the MP&M industry. This rule neither requires nor discourages the use of aqueous cleaners in lieu of halogenated hazardous air pollutant solvents.

13.3 Solid Waste Generation

Solid waste generated at MP&M sites includes hazardous and nonhazardous wastewater treatment sludge as well as waste oil removed in wastewater treatment. EPA estimates that compliance with this proposed rule will result in a decrease in wastewater treatment sludge and an increase in waste oil generated at MP&M facilities. Sections 13.3.1 and 13.3.2 discuss the impacts of the proposed rule on the generation of wastewater treatment sludge and waste oil, respectively.

13.3.1 Wastewater Treatment Sludge

Based on EPA's detailed questionnaires (see Section 3.0), the Agency estimates that MP&M facilities generated 267 million gallons of wastewater treatment sludge in 1996. EPA estimates that implementing the proposed wastewater treatment technology options (which incorporate water conservation and pollution prevention practices) will reduce sludge generation. Table 13-2 presents the amount of wastewater treatment sludge expected to be reduced as a result of implementing each of the technology options.

Table 13-2

Wastewater Treatment Sludge by Option

Option	Reduction in Sludge Generated[a] (million gal/yr)
Basic Technology (Options 1, 5, and 9)	62.9
Basic Technology with Water Conservation and Pollution Prevention (Options 2, 6, and 10)	63.6
Advanced Technology (Options 3 and 7)	62.8
Advanced Technology with Water Conservation and Pollution Prevention (Options 4 and 8)	62.9
Selected Option for Existing Sources[b] (Options 2, 6, and 10 with flow cutoffs)	61.1

Source: MP&M Design and Cost Model output
[a]Reduction in the amount of sludge generated (from baseline) if the technology option is implemented, summed for all regulated facilities.
[b]The Selected Option for Existing Sources regulates fewer MP&M facilities than other options shown in the table due to flow cutoffs (see Section 14).

As shown in Table 13-2, wastewater treatment sludge generation decreases with implementation of the wastewater treatment technology options. These options include sludge dewatering, which decreases sludge generation at sites that have chemical precipitation and settling technologies without sludge dewatering in place at baseline. EPA did not estimate sludge reduction at sites that already practice sludge dewatering.

The water conservation and pollution prevention technologies result in a greater sludge reduction. EPA expects these technologies to reduce sludge generation for the following reasons:

- Water conservation technologies reduce the amount of source water used and thus mass of metals in the source water entering the unit processes at a site (e.g., calcium, sodium), which reduces the amount of sludge generated during metals removal.

- Recycling of coolants and paint curtain wastewater reduces the mass of metal pollutants in treatment system influent streams, which reduces the amount of sludge generated during metals removal.

- Bath maintenance practices, including good operational practices regarding drag-out in plating processes, reduce the mass of metal pollutants in treatment system influent streams, which in turn reduces the amount of sludge generated during metals removal.

EPA classifies many sludges generated at MP&M facilities as either listed or characteristic hazardous wastes under the Resource Conservation and Recovery Act (RCRA) as follows:

- EPA classifies the sludge resulting from electroplating operations as EPA hazardous waste code F006 (40 CFR 261.31). If the facility mixes the wastewater from these electroplating operations with other nonelectroplating wastewater for treatment, EPA still considers all of the sludge generated from the treatment of this commingled waste stream to be a listed hazardous waste F006; or

- If the sludge or waste oil from wastewater treatment exceeds the standards for the Toxicity Characteristic (i.e, is hazardous), or exhibits other RCRA-defined hazardous characteristics (e.g., reactive, corrosive, or flammable), EPA considers it a characteristic hazardous waste (40 CFR 261.24).

EPA does not include chemical conversion coating, electroless plating, and printed circuit board manufacturing under the F006 listing (51 FR 43351, December 2, 1986). If the facility performs certain chemical conversion coating operations on aluminum, EPA classifies the resulting sludge as EPA hazardous waste number F019.

State and local regulations may also define MP&M sludges as hazardous wastes. Facilities should check with the applicable authorized authority to determine if other regulations apply.

Based on information collected during site visits and sampling episodes, the Agency believes that some of the solid waste generated at MP&M facilities would not be classified as hazardous. However, for the purpose of compliance cost estimation, the Agency assumed that all solid waste generated as a result of implementing the proposed technology options would be hazardous.

13.3.2 Waste Oil

Based on the Agency's detailed questionnaire, EPA estimates that MP&M facilities generated 805 million gallons of waste oil in 1996. Table 13-3 presents the amount of additional waste oil expected to be removed as a result of implementing each of the technology options.

Table 13-3

Waste Oil Removed by Option

Option	Incremental Waste Oil Removed[a] (million gal/yr)
Basic Technology (Options 1, 5, and 9)	1,350
Basic Technology with Water Conservation and Pollution Prevention (Options 2, 6, and 10)	944
Advanced Technology (Options 3 and 7)	597
Advanced Technology with Water Conservation and Pollution Prevention (Options 4 and 8)	585
Selected Option for Existing Sources[b] (Options 2, 6, and 10 with flow cutoffs)	841

Source: MP&M Design and Cost Model output.
[a]The amount of additional oil removed (from baseline) if the technology option is implemented, summed for all regulated facilities.
[b]The Selected Option for Existing Sources regulates fewer MP&M facilities than other options shown in the table due to flow cutoffs (see Section 14).

The removal of oil from MP&M wastewater prior to discharge to POTWs or surface waters results in an increase in waste oil generation from baseline to the proposed options. MP&M facilities usually either recycle waste oil on or off site, or contract haul it for disposal as either a hazardous or nonhazardous waste. The increase in waste oil generation reflects better removal of oil from the wastewater, and does not reflect an increase in overall oil use at MP&M facilities. For the purpose of compliance cost estimation, EPA assumed that all waste oil was contract hauled for disposal; however, EPA expects that some of the waste oil can be recycled either on or off site.

The decrease in waste oil removed from Options (1/5/9) to Options (2/6/10) is due to the 80 percent reduction of coolant discharge using the recycling technology included in the Options (2/6/10) technology trains. This system recovers and recycles oil-bearing machining coolants at the source, reducing the generation of spent coolant and extending the useful life of the coolant. The decrease in waste oil removed from Options (2/6/10) to the Selected Option for Existing Sources is due to the decrease in the number of regulated MP&M facilities as a result of the proposed flow cutoffs. (See Section 14 for discussion of flow cutoffs).

13.4 References

1. The Energy Information Administration. Electric Power Annual 1998 Volume 1, Table A1, 1998.

14.0 EFFLUENT LIMITATIONS AND STANDARDS

This section presents the proposed MP&M effluent limitations guidelines and standards for each regulatory level of control required by the Clean Water Act (CWA) and discusses the technology options. Section 1.0 discusses these levels of control. The proposed limitations and standards are based on the technologies included in Options 2, 4, 6 and 10, as discussed in Section 9.0. Except for the Steel Forming and Finishing Subcategory, the proposed MP&M effluent limitations guidelines and standards consist of concentration-based limitations for all new and existing direct and indirect dischargers within the scope of the proposed rule. The proposed MP&M effluent limitations guidelines and standards for the Steel Forming and Finishing Subcategory consist of mass-based limitations for all new and existing direct and indirect dischargers. In this Section, EPA provides its rationale for proposing different levels for the low flow exclusion for indirect dischargers in various subcategories. Direct dischargers are sites that discharge wastewater to a surface water. Indirect dischargers are sites that discharge wastewater to a publicly owned treatment works (POTW).

Sections 14.1 through 14. 7 discuss EPA's rationale for selecting the proposed option and summarizes the effluent limitations and standards for each of the regulatory levels of control for each subcategory. The Statistical Support Document for the Proposed Effluent Limitations Guidelines and Standards for the Metal Products & Machinery Industry [EPA-821-B-00-006] contains detailed information on those facilities EPA used in calculating the proposed BPT limitations and establishes the statistical methodology for developing numerical discharge limitations. Section 10.0 of this document summarizes EPA's methodology for calculating effluent limits, Section 9.0 discusses in detail all of the MP&M technology options, and Sections 11.0 and 12.0 discuss costs and loads, respectively.

14.1 Best Practicable Control Technology Currently Available (BPT)

EPA defines BPT effluent limits for conventional, toxic (priority), and non-conventional pollutants for direct discharging facilities. In specifying BPT, EPA looks at a number of factors. EPA first considers the cost of achieving effluent reductions in relation to the effluent reduction benefits. The Agency also considers the age of the equipment and facilities, the processes employed and any required process changes, engineering aspects of the control technologies, non-water quality environmental impacts (including energy requirements), and such other factors as the Agency deems appropriate (CWA 304(b)(1)(B)). Traditionally, EPA establishes BPT effluent limitations based on the average of the best performances of facilities within the industry of various ages, sizes, processes, or other common characteristics. Where existing performance is uniformly inadequate, EPA may require higher levels of control than are currently in place in an industrial category if the Agency determines that the technology can be practically applied. See "A Legislative History of the Federal Water Pollution Control Act Amendments of 1972," U.S. Senate Committee of Public Works, Serial No. 93-1, January 1973, p. 1468.

In addition, CWA Section 304(b)(1)(B) requires a cost-reasonableness assessment for BPT limitations. In determining the BPT limits, EPA must consider the total cost of treatment technologies in relation to the effluent reduction benefits achieved. This inquiry does not limit EPA's broad discretion to adopt BPT limitations that are achievable with available technology unless the required additional reductions are "wholly out of proportion to the costs of achieving such marginal level of reduction." See Legislative History, op. cit. p. 170. Moreover, the inquiry does not require the Agency to quantify benefits in monetary terms. See, for example, American Iron and Steel Institute v. EPA, 526 F. 2d 1027 (3rd Cir., 1975). For the BPT cost-reasonableness assessment, EPA used the total pounds of chemical oxygen demand (COD) removed for the General Metals, Metal Finishing Job Shops, Non-Chromium Anodizing, Steel Forming and Finishing, Oily Wastes, and Railroad Line Maintenance subcategories because this parameter best represented the pollutant removals without counting removals of individual pollutants more than once. EPA used oil and grease for the cost-reasonableness assessment for the Shipbuilding Dry Dock Subcategory because it best represented the pollutant removals for this subcategory without counting removals of individual pollutants more than once.

In balancing costs against the benefits of effluent reduction, EPA considers the volume and nature of expected discharges after application of BPT, the general environmental effects of pollutants, and the cost and economic impacts of the required level of pollution control. In past effluent limitations guidelines and standards, BPT cost-reasonableness has ranged from $0.94/lb removed to $34.34/lb removed in 1996 dollars. In developing guidelines, the CWA does not require or permit consideration of water quality problems attributable to particular point sources, or water quality improvements in particular bodies of water. Therefore, EPA did not consider these factors in developing the proposed MP&M limitations. See Weyerhaeuser Company v. Costle, 590 F. 2d 1011 (D.C. Cir. 1978).

Table 14-1 summarizes the pounds of pollutants removed for direct dischargers, and Table 14-2 summarizes the costs, costs per pound removed, and economic impacts for direct dischargers associated with each of the proposed options by subcategory. (See Section 14.4 for summary tables for indirect dischargers.)

EPA notes that the pounds removed presented in Table 14-1 may differ from the pounds removed presented in the Economic, Environmental, and Benefits Analysis of the Proposed Metal Products & Machinery Rule [EPA-821-B-00-0058]. This document presents the methodology employed to assess economic and environmental impacts of the proposed rule and the results of the analysis. The difference in pounds removed occurs because the Agency does not include facilities (or the associated pollutant loadings and removals) that closed at the baseline (i.e., EPA predicted that these facilities would close prior to the implementation of the MP&M rule) when performing certain economic analyses (e.g., cost-effectiveness). Table 14-1 estimates the annual pounds removed by the selected option for all of the direct discharging facilities in EPA's questionnaire database that discharged wastewater at the time EPA collected the data.

Table 14-1

Pounds of Pollutants Removed by the Proposed BPT Option for Direct Dischargers by Subcategory

Subcategory [a] (Number of Facilities)	Selected Option	Total Suspended Solids (lbs removed/yr)	Oil and Grease (lbs removed/yr)	Chemical Oxygen Demand (lbs removed/yr)	Priority and Nonconventional Metals (lbs removed/yr)	Priority and Nonconventional Organics (lbs removed/yr)	Cyanide (lbs removed/yr)
General Metals (3,794)	Option 2	10.1 million	7.8 million	181 million	4 million	5 million	184,000
Metal Finishing Job Shops (15)[b]	Option 2	13,000	14,400	232,000	34,000	4,600	5,700
Printed Wiring Boards (11)[b]	Option 2	51,000	238,000	1.3 million	172,000	22,000	1,400
Steel Forming and Finishing (43)	Option 2	884,000	101,000	4.5 million	387,000	76,000	1,100
Oily Wastes (911)	Option 6	349,000	885,000	5.1 million	81,000	127,000	10
Railroad Line Maintenance (34)	Option 10	9,000	47,400	59,000	1,000	78	0
Shipbuilding Dry Dock (6)	Option 10	650	8.5 million	0	1,400	700	0

[a] EPA did not identify any direct discharging facilities in the Non-Chromium Anodizing Subcategory; therefore, there are no estimated removals. See Section 14.1.3.

[b]Although EPA is not revising limits for TSS and O&G for these two subcategories, removals are reported based on incidental removals for the proposed MP&M Option 2 technology for BPT control of toxic and nonconventional pollutants.

Table 14-2

Annualized Costs and Economic Impacts of the Proposed BPT Option for Direct Dischargers by Subcategory

Subcategory [a] (Number of Facilities)	Selected Option	Annualized Compliance Costs for Selected Option ($1996)	Economic Impacts (Facility Closures) of Selected Option (Percentage of Regulated Subcategory)	BPT Cost per Pound Removed [b] (1996 $/pound removed)
General Metals (3,794)	Option 2	230 million	20 (<1%)	1.22
Metal Finishing Job Shops (15)	Option 2	1.3 million	0	5.60
Printed Wiring Boards (11)	Option 2	2.5 million	0	1.92
Steel Forming and Finishing (43)	Option 2	29.3 million	0	6.51
Oily Wastes (911)	Option 6	11.2 million	0	2.18
Railroad Line Maintenance (34)	Option 10	1.18 million	0	20.00
Shipbuilding Dry Dock (6)	Option 10	2.15 million	0	0.25

[a] EPA did not identify any direct discharging facilities in the Non-Chromium Anodizing Subcategory; therefore, there are no estimated costs. See Section 14.1.3 for estimates based on a model facility.
[b] EPA based the pounds used in calculating the BPT cost reasonableness on the COD removals only (shown in Table 14-1) for each subcategory, except for the use of oil and grease removals only (shown in Table 14-1) for the Shipbuilding Dry Dock Subcategory.

14.1.1 BPT Technology Selection for General Metals Subcategory

Section 6.2.1 describes the General Metals Subcategory. The Agency estimates that there are approximately 3,800 direct discharging facilities in the General Metals Subcategory. EPA estimates that the direct discharging facilities in the General Metals Subcategory currently discharge substantial quantities of pollutants into the surface waters of the United States, including 8.2 million pounds per year of oil and grease, 10.9 million pounds per year of total suspended solids (TSS), 187 million pounds of COD, 5.2 million pounds per year of priority and nonconventional metal pollutants, 5.2 million pounds of priority and nonconventional organic pollutants, and 187,000 pounds per year of cyanide. As a result of the quantity of pollutants currently discharged directly to the nation's waters by General Metals facilities, EPA determined that there was a need for BPT regulation for this subcategory.

Facilities in the General Metals Subcategory generally perform unit operations such as cleaning, etching, electroplating, electroless plating, and conversion coating that produce metal-bearing wastewater. In addition, some of these facilities also perform machining and grinding, impact deformation, and surface preparation operations that generate oily wastewater. Therefore, EPA considered technology options 1 through 4 for this subcategory because technologies included in these options treat both oily wastewater and metal-bearing wastewater. As explained above, EPA only discusses options 2 and 4 in detail in this section since these options costed less and removed more pollutants than options 1 and 3, respectively. See Section 9.0 for a discussion of technology options.

The Agency selected Option 2 as the basis for BPT regulation for the General Metals Subcategory. EPA's decision to base BPT limitations on Option 2 treatment reflects primarily two factors: (1) the degree of effluent reductions attainable, and (2) the total cost of the proposed treatment technologies in relation to the effluent reductions achieved. EPA found no basis for identifying different BPT limitations based on age, size, process, or other engineering factors. Neither the age nor the size of a facility in the General Metals Subcategory will directly affect the treatability of MP&M process wastewater. For facilities in this subcategory, the most pertinent factors for establishing the limitations are costs of treatment and the level of effluent reductions obtainable.

Tables 14-1 and 14-2 present the annual pollutant removals for direct dischargers for Option 2 and the cost per pound removed using only the pounds of COD removed, respectively. EPA estimates that implementation of Option 2 will cost $1.22 per pound of COD removed (1996 dollars). The Agency has concluded that the costs of BPT Option 2 are achievable and are reasonable as compared to the removals achieved by this option.

The technology proposed in Option 2 represents the average of the best performing facilities due to the prevalence of chemical precipitation followed by sedimentation in this subcategory. Approximately 22 percent of the direct discharging facilities in the General Metals Subcategory employ chemical precipitation followed by a clarifier (Option 2), while less than 1 percent employ microfiltration after chemical precipitation (Option 4).

Based on the available database, Option 4 only removes, on an annual basis, an additional 66,000 pounds of TSS, 12,300 pounds of oil and grease, 15,000 pounds of priority metals, and 880,000 pounds of nonconventional metals, while removing 324,000 pounds less COD and 31,000 pounds less priority and nonconventional organic pollutants than Option 2. Although there is a large amount of additional removals of TSS and nonconventional metals for Option 4 when considered across the entire population (3,800 facilities), the Agency determined that these additional removals were not significant when considered on a per-facility basis. In addition, Option 4's annualized cost is $52 million more than Option 2. EPA concluded that the lack of significant additional pollutant removals per facility achieved by Option 4 (and the fact that it removes less COD and organic pollutants) support the selection of Option 2 as the BPT technology basis. Table 14-3 lists the proposed BPT limitations for existing point sources in the General Metal Subcategory. EPA's data editing procedures and statistical methodology for calculating BPT limitations are explained in Section 10.0.

Existing direct discharging facilities in the General Metals Subcategory must achieve the following effluent limitations representing the application of BPT. Discharges must remain within the pH range 6 to 9 and must not exceed the following.

Table 14-3

BPT/BAT Effluent Limitations for the General Metals Subcategory

Regulated Parameter		Maximum Daily (mg/L (ppm))	Maximum Monthly Avg. (mg/L (ppm))
1.	Total Suspended Solids (TSS)	34	18
2.	Oil and Grease (as HEM)	15	12
3.	Total Organic Carbon (TOC) (as indicator)	87	50
4.	Total Organics Parameter (TOP)	9.0	4.3
5.	Cadmium	0.14	0.09
6.	Chromium	0.25	0.14
7.	Copper	0.55	0.28
8.	Total Cyanide	0.21	0.13
9.	Amenable Cyanide	0.14	0.07
10.	Lead	0.04	0.03
11.	Manganese	0.13	0.09
12.	Molybdenum	0.79	0.49
13.	Nickel	0.50	0.31
14.	Silver	0.22	0.09
15.	Sulfide, Total	31	13
16.	Tin	1.4	0.67
17.	Zinc	0.38	0.22

As explained in Section 15.2.7, upon agreement with the permitting authority, facilities with cyanide treatment have the option of achieving the limitation for either total or amenable cyanide. Additionally, upon agreement with the permitting authority, facilities must choose to monitor for TOP or TOC, or implement a management plan for organic chemicals as specified in Section 15.2.7.

14.1.2 BPT Technology Selection for Metal Finishing Job Shops Subcategory

Section 6.2.2 describes the Metal Finishing Job Shops Subcategory. The Agency estimates that there are approximately 15 direct discharging facilities in the Metal Finishing Job Shops Subcategory. EPA previously promulgated BPT and best available technology economically achievable (BAT) limitations for all of the facilities in this subcategory at 40 CFR Part 413 (Electroplating Pretreatment Standards) and at 40 CFR Part 433 (Metal Finishing Effluent Limitations Guidelines and Pretreatment Standards). However, EPA developed the existing regulations applicable to the facilities in the Metal Finishing Job Shops Subcategory approximately 20 years ago, and since that time, advances in electroplating and metal finishing

processes, water conservation, pollution prevention, and wastewater treatment have occurred. EPA is proposing new BPT effluent limitations guidelines for this subcategory.

EPA estimates that direct discharging facilities in the Metal Finishing Job Shops Subcategory currently discharge substantial quantities of pollutants to the surface waters of the United States, including 17,900 pounds per year of oil and grease, 20,500 pounds per year of TSS, 287,400 pounds per year of COD, 44,000 pounds per year of priority and nonconventional metal pollutants, 6,000 pounds per year of priority and nonconventional organic pollutants, and 6,000 pounds per year of cyanide. As a result of the quantity of pollutants currently discharged directly to the nation's waters by metal finishing job shop facilities, EPA determined that there is a need for BPT regulation for this subcategory.

Facilities in the Metal Finishing Job Shops Subcategory generally perform unit operations such as cleaning, etching, electroplating, electroless plating, passivating, and conversion coating that produce metal-bearing wastewater. In addition, some of these facilities also perform machining and grinding, impact deformation, and surface preparation operations that generate oily wastewater. Therefore, EPA considered technology options 1 through 4 for this subcategory because technologies included in these options treat both oily wastewater as well as metal-bearing wastewater. As explained above, EPA only discusses Options 2 and 4 in detail in this section since these options costed less and removed more pollutants than Options 1 and 3, respectively.

The Agency selected Option 2 as the basis for BPT regulation for the Metal Finishing Job Shops Subcategory. The new BPT limitations incorporate more stringent effluent requirements for priority metals, nonconventional pollutants, cyanide, and organic pollutants (by way of an indicator parameter) as compared to the limitations contained in 40 CFR 433.13. EPA has included the conventional pollutants, TSS and oil and grease, in the new BPT regulation for this subcategory at the same level as 40 CFR 433.13. EPA's decision to base BPT limitations on Option 2 treatment reflects primarily two factors: (1) the degree of effluent reductions attainable and (2) the total cost of the proposed treatment technologies in relation to the effluent reductions achieved. No basis could be found for identifying different BPT limitations based on age, size, process, or other engineering factors. Neither the age nor the size of a facility in the Metal Finishing Job Shops Subcategory will directly affect the treatability of MP&M process wastewater. For facilities in this subcategory, the most pertinent factors for establishing the limitations are costs of treatment and the level of effluent reductions obtainable. EPA based its decision not to revise the conventional pollutant limitations on the use of the alternate organics control parameters (i.e., TOC or TOP) and the small additional removals of TSS obtainable after the incidental removal due to control of the metals.

Table 14-1 presents the annual pollutant removals for direct dischargers for Option 2; Table 14-2 presents the cost per pound removed using only the pounds of COD removed. EPA estimates that implementation of Option 2 will cost $5.60 per pound of COD removed (1996 dollars). The Agency has concluded that the costs of BPT Option 2 are achievable and are reasonable as compared to the removals achieved by this option.

The technology proposed in Option 2 represents the average of the best performing facilities due to the prevalence of chemical precipitation followed by sedimentation in the subcategory. The Agency estimates that 100 percent of the direct discharging facilities in the Metal Finishing Job Shops Subcategory employ chemical precipitation followed by a clarifier (Option 2) while no facilities employ microfiltration after chemical precipitation (Option 4). Because no facilities in this subcategory employ microfiltration after chemical precipitation for solids separation, the Agency concluded that Option 4 does not represent the average of the best treatment.

Based on the available data base, Option 4 only removes, on an annual basis, an additional 6,900 pounds of priority and nonconventional metals, while removing 1,500 pounds less COD, and 600 pounds less priority and nonconventional organic pollutants than Option 2. EPA concluded that the lack of significant overall additional pollutant removals achieved by Option 4 (and the fact that it removes less COD and organic pollutants) support the selection of Option 2 as the BPT technology basis. Table 14-4 lists the proposed BPT limitations for the Metal Finishing Job Shops Subcategory.

EPA's data editing procedures and statistical methodology for calculating BPT limitations are explained in Section 10.0. In general, EPA calculated the new BPT limitations for this subcategory using data from facilities in the Metal Finishing Job Shops Subcategory employing Option 2 technology. As discussed above, EPA did not calculate new limitations for TSS or oil and grease for this subcategory. Instead, EPA set them at the same level as in the Metal Finishing effluent guidelines (40 CFR 433.13). For cyanide limitations, EPA used data from all subcategories where cyanide destruction systems were sampled. If data was not sufficient for developing BPT limitations for an individual pollutant in this subcategory, the Agency transferred data from another subcategory.

Existing direct discharging facilities in the Metal Finishing Job Shops Subcategory must achieve the following effluent limitations representing the application of BPT. Discharges must remain within the pH range 6 to 9 and must not exceed the following.

Table 14-4

BPT/BAT Effluent Limitations for the Metal Finishing Job Shops Subcategory

Regulated Parameter		Maximum Daily (mg/L (ppm))	Maximum Monthly Avg. (mg/L (ppm))
1.	Total Suspended Solids (TSS)	60	31
2.	Oil and Grease (as HEM)	52	26
3.	Total Organic Carbon (TOC) (as indicator)	78	59
4.	Total Organics Parameter (TOP)	9.0	4.3
5.	Cadmium	0.21	0.09
6.	Chromium	1.3	0.55
7.	Copper	1.3	0.57
8.	Total Cyanide	0.21	0.13
9.	Amenable Cyanide	0.14	0.07
10.	Lead	0.12	0.09
11.	Manganese	0.25	0.10
12.	Molybdenum	0.79	0.49
13.	Nickel	1.5	0.64
14.	Silver	0.15	0.06
15.	Sulfide, Total	31	13
16.	Tin	1.8	1.4
17.	Zinc	0.35	0.17

As explained in Section 15.2.7, upon agreement with the permitting authority, facilities with cyanide treatment have the option of achieving the limitation for either total or amenable cyanide. Additionally, upon agreement with the permitting authority, facilities must choose to monitor for TOP or TOC, or implement a management plan for organic chemicals as specified in Section 15.2.7.

14.1.3 BPT Technology Selection for Non-Chromium Anodizing Subcategory

Section 6.2.3 describes the Non-Chromium Anodizing Subcategory. EPA's survey of the MP&M industry did not identify any non-chromium anodizing facilities discharging directly to surface waters. All of the non-chromium anodizing facilities in EPA's data base are either indirect or zero dischargers. EPA consequently could not evaluate any treatment systems in place at direct discharging non-chromium anodizing facilities for establishing BPT limitations. Therefore, EPA relied on technology transfer based on information

and data from indirect discharging facilities in the Non-Chromium Anodizing Subcategory. The Agency concluded that the technology in place at some indirect discharging non-chromium anodizing facilities is appropriate to use as the basis for regulation of direct dischargers because the pollutant profile of the wastewater generated at those facilities discharging directly would be similar in character to that from indirect discharging non-chromium anodizing facilities and the model technologies in place at indirect dischargers are effective in treating the conventional pollutants that are generally not regulated in pretreatment standards.

EPA previously promulgated BPT and BAT limitations for all of the facilities in this subcategory at 40 CFR Part 433 (Metal Finishing Effluent Limitations Guidelines and Pretreatment Standards). However, EPA developed the regulations applicable to this subcategory approximately 20 years ago, and since that time, advances in anodizing processes, water conservation, pollution prevention, and wastewater treatment have occurred. EPA is proposing to set new BPT effluent limitations guidelines for this subcategory for metals, but is not revising the limitations for conventional pollutants (TSS and oil and grease). EPA based its decision not to revise the limitations for conventional pollutants on the small additional removals attainable after the incidental removal due to control of the metals.

In addition, the current regulations in 40 CFR Part 433 require non-chromium anodizing facilities to meet effluent limitations for seven metal pollutants. EPA's data show that these seven metals are present only in very small quantities in the current discharges at non-chromium anodizing facilities. Under the Metal Finishing effluent guidelines, EPA did not establish a BPT limit for aluminum, the metal found in the largest quantity in non-chromium anodizing facilities wastewater. The Agency has determined that direct discharging facilities in the Non-Chromium Anodizing Subcategory should have a limit for aluminum and thus is proposing to replace BPT in 40 CFR Part 433 with new MP&M effluent limitations that more appropriately reflect the pollutants found in non-chromium anodizing wastewater. EPA notes that the Agency expects a reduction in monitoring burden associated with this revision for direct discharge non-chromium anodizing facilities.

Facilities in the Non-Chromium Anodizing Subcategory generally perform unit operations such as cleaning, etching, and anodizing of aluminum that produce metal-bearing wastewater. The majority of the metal found in anodizing wastewater is aluminum. In addition, some of these facilities also perform machining and grinding, impact deformation, and surface preparation operations that generate oily wastewater. Therefore, EPA considered technology options 1 through 4 for this subcategory because technologies included in these options treat both oily wastewater as well as metal-bearing wastewater. As explained above, EPA only discusses Options 2 and 4 in detail in this section since these options costed less and removed more pollutants than Options 1 and 3, respectively.

The Agency selected Option 2 as the basis for BPT regulation for the Non-Chromium Anodizing Subcategory. Although EPA did not identify any existing non-chromium anodizing facilities from the detailed survey, EPA estimated the cost of treatment and pollutant removal for a median-sized direct discharging facility with a wastewater flow of 6.25 million

gallons per year, based on the characteristics of a similarly sized indirect discharging non-chromium anodizing facility. Because direct dischargers are more likely to have treatment in place, EPA provided the model facility with treatment in place equivalent to Option 1. Therefore, at the model direct discharging non-chromium anodizing facility, EPA estimates that implementation of Option 2 will cost $0.83 per pound of COD removed (1996 dollars), and has found that cost to be reasonable. EPA estimates that Option 2 would remove 25,700 pounds of pollutants per median-sized facility per year (including 9,200 pounds of TSS and 1,240 pounds of aluminum as incidental removals based on the control of metals).

Additionally, because solids separation by microfiltration is not used by any non-chromium anodizing facilities, the Agency concluded that Option 4 does not represent BPT for this subcategory. Table 14-5 lists the proposed BPT limitations for the Non-Chromium Anodizing Subcategory.

EPA's data editing procedures and statistical methodology for calculating BPT limitations are explained in Section 10.0. Because EPA's survey did not identify any direct dischargers in the Non-Chromium Anodizing Subcategory, EPA used data from indirect discharging facilities to develop the BPT limitations. The Agency identified two indirect discharging facilities in this subcategory that achieved very good pollutant reductions (including, on average, 96 percent reduction of aluminum and incidental removals of 95 percent for TSS). Therefore, EPA determined that the data from these facilities were appropriate for the development of BPT limitations. If data was not sufficient for developing BPT limitations for an individual pollutant in this subcategory, the Agency transferred data from another subcategory. In the case of TSS and oil and grease, EPA used the limitations in 40 CFR 433.13. The Statistical Development Document contains detailed information on which facilities EPA used in calculating the proposed BPT limitations.

Existing direct discharging facilities in the Non-Chromium Anodizing Subcategory must achieve the following effluent limitations representing the application of BPT. Discharges must remain within the pH range 6 to 9 and must not exceed the following.

Table 14-5

BPT/BAT Effluent Limitations for the Non-Chromium Anodizing Subcategory

Regulated Parameter		Maximum Daily (mg/L (ppm))	Maximum Monthly Avg. (mg/L (ppm))
1.	Total Suspended Solids (TSS)	60	31
2.	Oil and Grease (as HEM)	52	26
3.	Aluminum	8.2	4.0
4.	Manganese	0.13	0.09
5.	Nickel	0.50	0.31
6.	Zinc	0.38	0.22

14.1.4 BPT Technology Selection for Printed Wiring Board Subcategory

Section 6.2.4 describes the Printed Wiring Board Subcategory. The Agency estimates there are approximately 11 direct discharging facilities in this subcategory. EPA has previously promulgated BPT and BAT limitations for all of the facilities in this subcategory at 40 CFR Part 433 (Metal Finishing). However, EPA developed the regulations applicable to this subcategory approximately 20 years ago, and since that time, advances in printed wiring board manufacturing processes, water conservation practices, pollution prevention techniques, and wastewater treatment have occurred. EPA is proposing to set new BPT effluent limitations guidelines for this subcategory.

EPA estimates that direct discharging facilities in the Printed Wiring Board Subcategory currently discharge substantial quantities of pollutants to the surface waters of the United States, including 262,000 pounds per year of oil and grease, 100,000 pounds per year of TSS, 1.7 million pounds per year of COD, 242,000 pounds per year of priority and nonconventional metal pollutants, 35,000 pounds per year of priority and nonconventional organic pollutants, and 1,600 pounds per year of cyanide. As a result of the quantity of pollutant currently discharged directly to the nation's waters by printed wiring board facilities, EPA determined that there is a need for BPT regulation for this subcategory.

Facilities in the Printed Wiring Board Subcategory generally perform unit operations such as cleaning, etching, masking, electroplating, electroless plating, applying, developing and stripping of photoresist, and tin/lead soldering that produce metal-bearing and organic-bearing wastewater. Therefore, EPA considered technology Options 1 through 4 for this subcategory. As explained above, EPA only discusses Options 2 and 4 in detail in this document since these options costed less and removed more pollutants than Options 1 and 3, respectively. Section 9.0 describes the technology options.

The Agency selected Option 2 as the basis for BPT regulation for the Printed Wiring Board Subcategory. The new BPT limitations incorporate more stringent effluent requirements for priority metals, nonconventional pollutants, cyanide, and organic pollutants (by way of an indicator parameter) as compared to the limitations contained in 40 CFR 433.13. EPA has included the conventional pollutants, TSS and oil and grease, in the new BPT regulation for this subcategory at the same level as 40 CFR 433.13. Removals for these pollutants are incidental removals based on the increased control of metals and organic pollutants (by way of an indicator parameter) by the proposed BPT technology options. EPA's decision to base BPT limitations on Option 2 treatment for priority metals, non conventional pollutants, cyanide and organic pollutants reflects primarily two factors: (1) the degree of effluent reductions attainable and (2) the total cost of the proposed treatment technologies in relation to the effluent reductions achieved. No basis could be found for identifying different BPT limitations based on age, size, process, or other engineering factors. Neither the age nor the size of a facility in the Printed Wiring Board Subcategory will directly affect the treatability of MP&M process wastewater. For facilities in this subcategory, the most pertinent factors for establishing the limitations are costs of treatment and the level of effluent reductions obtainable.

Table 14-1 presents the annual pollutant removals for direct dischargers for Option 2; Table 14-2 presents the cost per pound removed using only the pounds of COD removed. EPA estimates that implementation of Option 2 will cost $1.92 per pound of COD removed (1996 dollars). The Agency has concluded that the costs of BPT Option 2 are achievable and are reasonable as compared to the removals achieved by this option.

The technology proposed in Option 2 represents the average of the best performing facilities due to the prevalence of chemical precipitation followed by sedimentation in this subcategory. The Agency estimates that 100 percent of the direct discharging facilities in the Printed Wiring Board Subcategory employ chemical precipitation and sedimentation treatment (Option 2); however, the Agency did identify indirect dischargers in this subcategory with Option 4 technology in place. In fact, EPA collected wastewater treatment samples at one indirect discharging printed wiring board manufacturing facility that used Option 4 technology.

Based on the available database, Option 4 only removes, on an annual basis, an additional 48,000 pounds of priority and nonconventional metals, while removing 9,000 less pounds of COD, and 250 less pounds of priority and nonconventional organic pollutants than Option 2. In addition, Option 4's annualized cost is $2 million more than Option 2. EPA concluded that the lack of significant overall additional pollutant removals achieved by Option 4 (and the fact that it removes less COD and organic pollutants) support the selection of Option 2 as the BPT technology basis. Table 14-6 lists the proposed BPT effluent limitations for the Printed Wiring Board Subcategory.

EPA’s data editing procedures and statistical methodology for calculating BPT limitations are explained in Section 10.0. In general, EPA calculated the new BPT limitations for this subcategory using data from facilities in the Printed Wiring Board Subcategory employing Option 2 technology. As discussed above, EPA did not calculate new limitations for TSS or oil

and grease for this subcategory. Instead, EPA set them at the same level as in the Metal Finishing effluent guidelines (40 CFR 433.13). For cyanide limitations, EPA used data from all subcategories where cyanide destruction systems were sampled. If data was not sufficient for developing BPT limitations for an individual pollutant in this subcategory, the Agency transferred data from another subcategory.

Existing direct discharging facilities in the Printed Wiring Board Subcategory must achieve the following effluent limitations representing the application of BPT. Discharges must remain within the pH range 6 to 9 and must not exceed the following.

Table 14-6

BPT/BAT Effluent Limitations for the Printed Wiring Board Subcategory

Regulated Parameter		Maximum Daily (mg/L (ppm))	Maximum Monthly Avg. (mg/L (ppm))
1.	Total Suspended Solids (TSS)	60	31
2.	Oil and Grease (as HEM)	52	26
3.	Total Organic Carbon (TOC) (as indicator)	101	67
4.	Total Organics Parameter (TOP)	9.0	4.3
	Chromium	0.25	0.14
6.	Copper	0.55	0.28
7.	Total Cyanide	0.21	0.13
8.	Amenable Cyanide	0.14	0.07
9.	Lead	0.04	0.03
10.	Manganese	1.3	0.64
11.	Nickel	0.30	0.14
12.	Sulfide, Total	31	13
13.	Tin	0.31	0.14
14.	Zinc	0.38	0.22

As explained in Section 15.2.7, upon agreement with the permitting authority, facilities with cyanide treatment have the option of achieving the limitation for either amenable or total cyanide. Additionally, upon agreement with the permitting authority, facilities must choose to monitor for TOP or TOC, or implement a management plan for organic chemicals as specified in Section 15.2.7.

14.1.5 BPT Technology Selection for Steel Forming and Finishing Subcategory

Section 6.2.5 describes the Steel Forming and Finishing Subcategory. The Agency estimates there are approximately 43 direct discharging facilities in this subcategory. EPA previously promulgated BPT and BAT limitations for all of the facilities in this subcategory at 40 CFR Part 420 (Iron and Steel Manufacturing Effluent Limitations Guidelines and Pretreatment Standards). However, EPA developed the regulations applicable to this subcategory approximately 20 years ago, and since that time, changes in the industry, particularly in growth of the number of facilities conducting steel forming and finishing operations without the presence of the typical steel manufacturing processes, and changes in water conservation practices, pollution prevention techniques, and wastewater treatment have occurred. In addition, the operations covered by the proposed rule are segments of the forming and finishing subcategories in 40 CFR 420. The proposed MP&M subcategory is comprised of limitations and standards based on specific forming and finishing operations only. In a separate notice, EPA is proposing to revise other subcategories covered by the Iron and Steel Manufacturing effluent guidelines.

EPA estimates that direct discharging facilities in the new Steel Forming and Finishing Subcategory currently discharge substantial quantities of pollutants to the surface waters of the United States, including 195,000 pounds per year of oil and grease, 1.08 million pounds per year of TSS, 6 million pounds per year of COD, 771,000 pounds per year of priority and nonconventional metal pollutants, 168,000 pounds per year of priority and nonconventional organic pollutants, and 2,300 pounds per year of cyanide. As a result of the quantity of pollutant currently discharged directly to the nation’s waters by steel forming and finishing facilities, EPA determined that there is a need for BPT regulation for this subcategory.

Facilities in the proposed MP&M Steel Forming and Finishing Subcategory generally perform unit operations such as acid pickling, annealing, conversion coating (e.g., zinc phosphate, copper sulfate), hot dip coating, electroplating, heat treatment, welding, and drawing of steel bar, rod, and wire that produce metal-bearing and oil-bearing wastewater. Therefore, EPA considered technology Options 1 through 4 for this subcategory. As explained above, EPA only discusses Options 2 and 4 in detail in this section since these options costed less and removed more pollutants than Options 1 and 3, respectively.

The Agency is proposing Option 2 as the basis for the new BPT regulation for the Steel Forming and Finishing Subcategory. EPA's decision to propose BPT limitations based on Option 2 treatment reflects primarily two factors: (1) the degree of effluent reductions attainable and (2) the total cost of the proposed treatment technologies in relation to the effluent reductions achieved. No basis could be found for identifying different BPT limitations based on age, size, process, or other engineering factors. Neither the age nor the size of a facility in the Steel Forming and Finishing Subcategory will directly affect the treatability of MP&M process wastewater. For facilities in this subcategory, the most pertinent factors for establishing the limitations are costs of treatment and the level of effluent reductions obtainable.

Table 14-1 presents the annual pollutant removals for direct dischargers for Option 2; Table 14-2 presents the cost per pound removed using only the pounds of COD removed. EPA estimates that implementation of Option 2 will cost $6.51 per pound of COD removed (1996 dollars). The Agency has concluded that the costs of BPT Option 2 are achievable and are reasonable as compared to the removals achieved by this option.

The technology proposed in Option 2 represents the average of the best performing facilities due to the prevalence of chemical precipitation followed by sedimentation in this subcategory. The Agency estimates that 64 percent of the direct discharging facilities in this subcategory employ chemical precipitation followed by sedimentation (Option 2). Because no facilities in this subcategory employ microfiltration after chemical precipitation for solids separation, the Agency concluded that Option 4 does not represent BPT. Table 14-8 lists the proposed BPT effluent limitations for the Steel Forming and Finishing Subcategory.

EPA's data editing procedures and statistical methodology for calculating BPT limitations are explained in Section 10.0. In general, EPA calculated BPT limitations for the Steel Forming and Finishing Subcategory using data transferred from facilities employing Option 2 technology in the General Metals subcategory. However, EPA determined that mass-based limitations (rather than concentration-based limitations developed for the General Metals subcategory) are more appropriate for this subcategory. Facilities in this subcategory keep close track of their production on a mass basis primarily because of their prior regulation under the mass-based Iron and Steel Manufacturing effluent guidelines. Furthermore, EPA determined that mass-based limitations are appropriate for this subcategory due to the uniform nature of the products produced (wire, rod, bar, pipe, and tube). The uniform nature of the products produced by this industry makes for an easier conversion from concentration-based to mass-based limitations. One of the primary reasons that EPA is not requiring mass-based limitations for other subcategories is the fact that most MP&M facilities do not collect production information on a wastestream-by-wastestream basis, and therefore development of mass-based limitations could create a significant burden for both the POTW and the MP&M facility. In the case of the Steel Forming and Finishing subcategory, EPA is able to use the industry's production information to propose production-based limitations for the Steel Forming and Finishing Subcategory.

In the proposal, EPA solicits paired treatment system influent and effluent data from Steel Forming and Finishing facilities, so that limits may better reflect treatment at Steel Forming and Finishing facilities. EPA also solicits comment on whether to allow concentration-based limits for this subcategory and any rationale for doing so. For cyanide limitations, EPA used data from all subcategories where cyanide destruction systems were sampled. The Statistical Development Document contains detailed information on which facilities EPA used in calculating the proposed BPT limitations.

EPA expresses the proposed effluent limitations guidelines and standards for BPT, BAT, NSPS, PSES, and PSNS for the Steel Forming and Finishing Subcategory as mass limitations in pounds/1,000 pounds of product. The Agency derived the mass limitations by

multiplying an effluent concentration (determined from the analysis of treatment system performance) by an appropriate wastewater volume ("production-normalized flow") determined for each forming or finishing operation expressed in gallons/ton of product. EPA developed the production normalized flows used to develop the limits in the proposed rule from survey questionnaire responses from Steel Forming and Finishing facilities. The production-normalized flows are listed in Table 14-7.

Table 14-7

Production Normalized Flows (PNF) for Steel Forming and Finishing

Unit Operation	PNF (gallons/ton)
Acid Pickling	500
Alkaline Cleaning	500
Cold Forming	0
Continuous Annealing	25
Electroplating	1000
Hot Dip Coating	145
Lubrication	12
Mechanical Descaling	2
Painting	65
Pressure Deformation	25

EPA defines the unit operations listed in Table 14-7 as follows.

(a) *Acid pickling* means the removal of scale and/or oxide from steel surfaces using acid solutions. The mass-based limitations for acid pickling operations include wastewater flow volumes from acid treatment with and without chromium, acid pickling neutralization, annealing, alkaline cleaning, electrolytic sodium sulfate descaling, and salt bath descaling.

(b) *Alkaline cleaning* means the application of solutions containing caustic soda, soda ash, alkaline silicates, or alkaline phosphates to a metal surface primarily for removing mineral deposits, animal fats, and oils. The mass-based limitations for alkaline cleaning operations include wastewater flow volumes from alkaline cleaning for oil removal, alkaline treatment without cyanide, aqueous degreasing, and electrolytic cleaning operations.

(c) *Cold forming* means operations conducted on unheated steel for purposes of imparting desired mechanical properties and surface qualities (density, smoothness) to the steel. The mass-based limitations for cold forming operations are based on zero wastewater discharge.

(d) *Continuous Annealing* means a heat treatment process in which steel is exposed to an elevated temperature in a controlled atmosphere for an extended period of time

and then cooled. The mass-based limitations for continuous annealing operations include wastewater flow volumes from heat treating operations.

(e) *Electroplating* means the application of metal coatings including, but not limited to, chromium, copper, nickel, tin, zinc, and combinations thereof, on steel products using an electro-chemical process. The mass-based limitations for electroplating operations includes wastewater flow volumes from acid pickling, annealing, alkaline cleaning, electroplating without chromium or cyanide, and electroless plating operations.

(f) *Hot Dip Coating* means the coating of pre-cleaned steel parts by immersion in a molten metal bath. The mass-based limitations for hot dip coating operations includes wastewater flow volumes from acid pickling, annealing, alkaline cleaning, chemical conversion coating without chromium, chromate conversion coating, galvanizing, and hot dip coating operations.

(g) *Lubrication* means the process of applying a substance to the surface of the steel in order to reduce friction or corrosion. The mass-based limitations for lubrication operations includes wastewater flow volumes from corrosion preventive coating operations as defined in 438.61(b).

(h) *Mechanical Descaling* means the process of removing scale by mechanical or physical means from the surface of steel. The mass-based limitations for mechanical descaling operations includes wastewater flow volumes from abrasive blasting, burnishing, grinding, impact deformation, machining, and testing operations.

(i) *Painting* means applying an organic coating to a steel bar, rod, wire, pipe, or tube. The mass-based limitations for painting operations includes wastewater flow volumes from spray or brush painting and immersion painting.

(j) *Pressure Deformation* means applying force (other than impact force) to permanently deform or shape a steel bar, rod, wire, pipe, or tube. The mass-based limitations for pressure deformation operations includes wastewater flow volumes from forging operations and extrusion operations.

EPA transferred the effluent concentrations used to develop the proposed Steel Forming and Finishing Subcategory limitations and standards from those used for the General Metals Subcategory because it did not collect analytical wastewater data from Steel Forming and Finishing facilities that used the Option 2 treatment technology. EPA believes that the wastewater characteristics of the General Metals Subcategory closely resemble those of the Steel Forming and Finishing subcategory. EPA will conduct analytical wastewater sampling of well-operated chemical precipitation and clarification systems at Steel Forming and Finishing facilities post-proposal. EPA intends on developing limitations and standards for this subcategory for the final rule that would be based on the Steel Forming and Finishing facilities in this subcategory.

Permit writers and control authorities shall compute mass effluent limitations and pretreatment requirements for each forming/finishing operation by multiplying the average daily production rate (or other reasonable measure of production) by the respective effluent limitations guidelines or standards listed in Table 14-8. In determining the production rate for the Steel

Forming and Finishing Subcategory, EPA is proposing to require permit writers and control authorities to use the following protocols:

(1) For similar, multiple production lines with process waters treated in the same wastewater treatment system, the reasonable measure of production shall be determined from the combined production of the similar production lines during the same time period.

(2) For process wastewater treatment systems where wastewater from two or more different production lines are commingled in the same wastewater treatment system, the reasonable measure of production shall be determined separately for each production line (or combination of similar production lines) during the same time period.

Permit writers and control authorities shall not include production from unit operations that do not generate or discharge process wastewater in the calculation of the operating rate.

The mass effluent limitations or pretreatment requirements applicable at a given NPDES or pretreatment compliance monitoring point shall be the sum of the mass effluent limitations or pretreatment requirements for each regulated pollutant parameter within each applicable forming/finishing operation with process wastewater discharging to that compliance monitoring point.

Existing direct discharging facilities in the Steel Forming and Finishing Subcategory must achieve the following effluent limitations representing the application of BPT. Discharges must remain within the pH range 6 to 9 and must not exceed the following.

Table 14-8

BPT/BAT Effluent Limitations for the Steel Forming and Finishing Subcategory

Pollutant	TSS		O&G (as HEM)	
Forming/Finishing Operation	**Maximum Daily (lbs/1000 lbs of product)**	**Maximum Monthly Avg. (lbs/1000 lbs of product)**	**Maximum Daily (lbs/1000 lbs of product)**	**Maximum Monthly Avg. (lbs/1000 lbs of product)**
(a) Acid Pickling	0.0709	0.0369	0.0312	0.0239
(b) Alkaline Cleaning	0.0709	0.0369	0.0312	0.0239
(c) Cold Forming	0	0	0	0
(d) Continuous Annealing	0.00355	0.00184	0.00156	0.00120
(e) Electroplating	0.142	0.0737	0.0623	0.0478
(f) Hot Dip Coating	0.0206	0.0107	0.00903	0.00693
(g) Lubrication	0.00170	0.000884	0.000748	0.000574
(h) Mechanical Descaling	0.000284	0.000148	0.000125	0.0000956
(i) Painting	0.00922	0.00479	0.00405	0.00311
(j) Pressure Deformation	0.00355	0.00184	0.00156	0.00120

Pollutant	TOC		TOP	
Forming/Finishing Operation	**Maximum Daily (lbs/1000 lbs of product)**	**Maximum Monthly Avg. (lbs/1000 lbs of product)**	**Maximum Daily (lbs/1000 lbs of product)**	**Maximum Monthly Avg. (lbs/1000 lbs of product)**
(a) Acid Pickling	0.181	0.103	0.0188	0.00896
(b) Alkaline Cleaning	0.181	0.103	0.0188	0.00896
(c) Cold Forming	0	0	0	0
(d) Continuous Annealing	0.00901	0.00514	0.000937	0.000448
(e) Electroplating	0.361	0.206	0.0375	0.0180
(f) Hot Dip Coating	0.0523	0.0300	0.00543	0.00260
(g) Lubrication	0.00433	0.00247	0.000450	0.000215

Table 14-8 (Continued)

(h) Mechanical Descaling	0.000721	0.000411	0.0000750	0.0000359
(i) Painting	0.0235	0.0134	0.00244	0.00117
(j) Pressure Deformation	0.00901	0.00514	0.000937	0.000448

Pollutant	Cadmium		Chromium	
Forming/Finishing Operation	**Maximum Daily (lbs/1000 lbs of product)**	**Maximum Monthly Avg. (lbs/1000 lbs of product)**	**Maximum Daily (lbs/1000 lbs of product)**	**Maximum Monthly Avg. (lbs/1000 lbs of product)**
(a) Acid Pickling	0.000292	0.000188	0.000509	0.000277
(b) Alkaline Cleaning	0.000292	0.000188	0.000509	0.000277
(c) Cold Forming	0	0	0	0
(d) Continuous Annealing	0.0000146	0.00000938	0.0000255	0.0000139
(e) Electroplating	0.000583	0.000376	0.00102	0.000553
(f) Hot Dip Coating	0.0000845	0.0000545	0.000148	0.0000801
(g) Lubrication	0.00000699	0.00000450	0.0000123	0.00000663
(h) Mechanical Descaling	0.00000116	0.00000075	0.00000204	0.00000110
(i) Painting	0.0000379	0.0000244	0.0000662	0.0000359
(j) Pressure Deformation	0.0000146	0.00000938	0.0000255	0.0000139

Pollutant	Copper		Lead	
Forming/Finishing Operation	**Maximum Daily (lbs/1000 lbs of product)**	**Maximum Monthly Avg. (lbs/1000 lbs of product)**	**Maximum Daily (lbs/1000 lbs of product)**	**Maximum Monthly Avg. (lbs/1000 lbs of product)**
(a) Acid Pickling	0.00114	0.000565	0.0000737	0.0000522
(b) Alkaline Cleaning	0.00114	0.000565	0.0000737	0.0000522
(c) Cold Forming	0	0	0	0
(d) Continuous Annealing	0.0000570	0.0000283	0.00000368	0.00000261
(e) Electroplating	0.00228	0.00113	0.000148	0.000105

Table 14-8 (Continued)

(f) Hot Dip Coating	0.000331	0.000164	0.0000214	0.0000152
(g) Lubrication	0.0000274	0.0000136	0.00000177	0.00000125
(h) Mechanical Descaling	0.00000455	0.00000226	0.00000029	0.00000021
(i) Painting	0.000148	0.0000734	0.00000957	0.00000678
(j) Pressure Deformation	0.0000570	0.0000283	0.00000368	0.00000261

Pollutant	**Manganese**		**Molybdenum**	
Forming/Finishing Operation	**Maximum Daily (lbs/1000 lbs of product)**	**Maximum Monthly Avg. (lbs/1000 lbs of product)**	**Maximum Daily (lbs/1000 lbs of product)**	**Maximum Monthly Avg. (lbs/1000 lbs of product)**
(a) Acid Pickling	0.000269	0.000183	0.00164	0.00103
(b) Alkaline Cleaning	0.000269	0.000183	0.00164	0.00103
(c) Cold Forming	0	0	0	0
(d) Continuous Annealing	0.0000135	0.00000914	0.0000820	0.0000511
(e) Electroplating	0.000537	0.000366	0.00328	0.00205
(f) Hot Dip Coating	0.0000779	0.0000531	0.000476	0.000297
(g) Lubrication	0.00000644	0.00000439	0.0000394	0.0000246
(h) Mechanical Descaling	0.00000107	0.00000073	0.00000656	0.00000409
(i) Painting	0.0000350	0.0000238	0.000214	0.000133
(j) Pressure Deformation	0.0000135	0.00000914	0.0000820	0.0000511

Pollutant	**Nickel**		**Silver**	
Forming/Finishing Operation	**Maximum Daily (lbs/1000 lbs of product)**	**Maximum Monthly Avg. (lbs/1000 lbs of product)**	**Maximum Daily (lbs/1000 lbs of product)**	**Maximum Monthly Avg. (lbs/1000 lbs of product)**
(a) Acid Pickling	0.00104	0.000642	0.000456	0.000187
(b) Alkaline Cleaning	0.00104	0.000642	0.000456	0.000187
(c) Cold Forming	0	0	0	0
(d) Continuous Annealing	0.0000520	0.0000321	0.0000228	0.00000934

Table 14-8 (Continued)

Pollutant	Nickel		Silver	
(e) Electroplating	0.00208	0.00129	0.000912	0.000374
(f) Hot Dip Coating	0.000302	0.000186	0.000133	0.0000542
(g) Lubrication	0.0000250	0.0000154	0.0000110	0.00000448
(h) Mechanical Descaling	0.00000415	0.00000257	0.00000182	0.00000075
(i) Painting	0.000135	0.0000834	0.0000593	0.0000243
(j) Pressure Deformation	0.0000520	0.0000321	0.0000228	0.00000934

Pollutant	Sulfide (as S)		Tin	
Forming/Finishing Operation	**Maximum Daily (lbs/1000 lbs of product)**	**Maximum Monthly Avg. (lbs/1000 lbs of product)**	**Maximum Daily (lbs/1000 lbs of product)**	**Maximum Monthly Avg. (lbs/1000 lbs of product)**
(a) Acid Pickling	0.0630	0.0267	0.00274	0.00139
(b) Alkaline Cleaning	0.0630	0.0267	0.00274	0.00139
(c) Cold Forming	0	0	0	0
(d) Continuous Annealing	0.00315	0.00134	0.000137	0.0000694
(e) Electroplating	0.126	0.0534	0.00547	0.00278
(f) Hot Dip Coating	0.0183	0.00774	0.000793	0.000403
(g) Lubrication	0.00151	0.000641	0.0000656	0.0000333
(h) Mechanical Descaling	0.000252	0.000107	0.0000110	0.00000555
(i) Painting	0.00818	0.00347	0.000356	0.000181
(j) Pressure Deformation	0.00315	0.00134	0.000137	0.0000694

Pollutant	Zinc	
Forming/Finishing Operation	**Maximum Daily (lbs/1000 lbs of product)**	**Maximum Monthly Avg. (lbs/1000 lbs of product)**
(a) Acid Pickling	0.000793	0.000456
(b) Alkaline Cleaning	0.000793	0.000456
(c) Cold Forming	0	0

Table 14-8 (Continued)

(d) Continuous Annealing	0.0000397	0.0000228
(e) Electroplating	0.00159	0.000912
(f) Hot Dip Coating	0.000230	0.000133
(g) Lubrication	0.0000191	0.0000110
(h) Mechanical Descaling	0.00000317	0.00000182
(i) Painting	0.000103	0.0000593
(j) Pressure Deformation	0.0000397	0.0000228

Pollutant	**Cyanide (T)**		**Cyanide (A)**	
Forming/Finishing Operation	**Maximum Daily (lbs/1000 lbs of product)**	**Maximum Monthly Avg. (lbs/1000 lbs of product)**	**Maximum Daily (lbs/1000 lbs of product)**	**Maximum Monthly Avg. (lbs/1000 lbs of product)**
(a) Electroplating	0.000865	0.000513	0.000580	0.000282

As explained in Section 15.2.7, upon agreement with the permitting authority, facilities with cyanide treatment have the option of achieving the limitation for either amenable or total cyanide. Additionally, upon agreement with the permitting authority, facilities must choose to monitor for TOP or TOC, or implement a management plan for organic chemicals as specified in Section 15.2.7.

14.1.6 BPT Technology Selection for the Oily Wastes Subcategory

Section 6.2.6 describes the Oily Wastes Subcategory. EPA estimates that approximately 900 MP&M direct discharging facilities in the Oily Wastes Subcategory currently discharge substantial quantities of pollutants to the surface waters of the United States, including 965,000 pounds per year of oil and grease, 414,00 pounds per year of TSS, 6.4 million pounds per year of COD, 595,000 pounds per year of priority and nonconventional metal pollutants, and 135,000 pounds per year of priority and nonconventional organic pollutants. As a result of the quantity of pollutant currently discharged directly to the nation's waters by oily waste facilities, EPA determined that there is a need for BPT regulation for this subcategory.

Facilities in the Oily Wastes Subcategory generally perform unit operations such as alkaline cleaning and its associated rinses to remove oil and dirt from components, machining and grinding that produce wastewater containing coolants and lubricants, and dye penetrant and magnetic flux testing that produce mainly oil-bearing wastewater (Section 6.2.6 lists the unit operations that define the applicability of this subcategory). Because of the oily nature of the wastewater, EPA considered technology options 5 through 8 for this subcategory. Section 9.0

describes the technology options. (EPA did not consider oily wastewater treatment using dissolved air flotation (DAF) (Options 9 and 10) because it was not widely used by facilities in this subcategory. The Agency analyzed the DAF options for the Railroad Line Maintenance and Shipbuilding Dry Dock Subcategories only.) As explained above, EPA only discusses Options 6 and 8 in this document in detail since these options costed less and removed more pollutants than Options 5 and 7, respectively.

The Agency selected Option 6, oil/water separation by chemical emulsion breaking, gravity separation, and oil skimming, as the basis for the new BPT regulation for the Oily Wastes Subcategory. EPA's decision to propose BPT limitations on Option 6 treatment reflects primarily two factors: (1) the degree of effluent reductions attainable and (2) the total cost of the proposed treatment technologies in relation to the effluent reductions achieved. No basis could be found for identifying different BPT limitations based on age, size, process, or other engineering factors. Neither the age nor the size of a facility in the Oily Wastes Subcategory will directly affect the treatability of MP&M process wastewater. For facilities in this subcategory, the most pertinent factors for establishing the limitations are costs of treatment and the level of effluent reductions obtainable.

Table 14-1 presents the annual pollutant removals for direct dischargers for Option 6; Table 14-2 presents the cost per pound removed using only the pounds of COD removed. EPA estimates that implementation of Option 6 will cost $2.18 per pound of COD removed (1996 dollars). The Agency has concluded that the costs of BPT Option 6 are achievable and are reasonable as compared to the removals achieved by this option.

The technology proposed in Option 6 represents the average of the best performing facilities due to the prevalence of chemical emulsion breaking and oil skimming in this subcategory. The Agency estimates that 11 percent of the direct discharging facilities in the Oily Wastes Subcategory perform oil/water separation through chemical emulsion breaking (Option 6) while only 4 percent employ ultrafiltration (Option 8).

Based on the available data base, Option 8 only removes, on an annual basis, an additional 19,000 pounds of TSS, and 56,600 pounds of oil and grease, while removing 1.42 million less pounds of COD, 12,000 less pounds of priority and nonconventional metals, and 2,400 less pounds of priority and nonconventional organic pollutants than Option 6. In addition, Option 8's annualized cost is $43 million more than Option 6. EPA concluded that the lack of significant overall additional pollutant removals achieved by Option 8 do not justify its use as a basis for BPT for this subcategory. Table 14-9 lists the proposed BPT effluent limitations for the Oily Wastes Subcategory.

EPA’s data editing procedures and statistical methodology for calculating BPT limitations are explained in Section 10.0. EPA calculated BPT limitations for this subcategory using data from facilities in the Oily Wastes subcategory employing Option 6 technology.

Existing direct discharging facilities in the Oily Wastes Subcategory must achieve the following effluent limitations representing the application of BPT. Discharges must remain within the pH range 6 to 9 and must not exceed the following.

Table 14-9

BPT/BAT Effluent Limitations for the Oily Wastes Subcategory

Regulated Parameter		Maximum Daily (mg/L (ppm))	Maximum Monthly Avg. (mg/L (ppm))
1.	Total Suspended Solids (TSS)	63	31
2.	Oil and Grease (as HEM)	27	20
3.	Total Organic Carbon (TOC) (as indicator)	633	378
4.	Total Organics Parameter (TOP)	9.0	4.3
5.	Sulfide, Total	31	13

Upon agreement with the permitting authority, facilities must choose to monitor for TOP or TOC, or implement a management plan for organic chemicals as specified in Section 15.2.7.

14.1.7 BPT Technology Selection for the Railroad Line Maintenance Subcategory

Section 6.2.7 describes the Railroad Line Maintenance Subcategory. The Agency estimates that there are approximately 34 direct discharging facilities in this subcategory. EPA determined that BPT limitations for this subcategory were necessary because of the oil and grease and potential TSS loads that facilities in this subcategory generate. EPA estimates that direct discharging facilities in the Railroad Line Maintenance Subcategory currently discharge substantial quantities of pollutants to the surface waters of the United States, including 52,000 pounds per year of oil and grease, 170,000 pounds per year of COD, 18,000 pounds per year of TSS, 54,000 pounds per year of priority and nonconventional metal pollutants, and 1,600 pounds per year of priority and nonconventional organic pollutants. As a result of the quantity of pollutant currently discharged directly to the nation's waters by railroad line maintenance facilities, EPA determined that there is a need for BPT regulation for this subcategory.

Facilities in the Railroad Line Maintenance Subcategory generally perform unit operations that produce mainly oil-bearing wastewater, such as alkaline cleaning and its associated rinses to remove oil and dirt from components, and machining and grinding, which use coolants and lubricants. Because of the oily nature of the wastewater, EPA considered technology options 7 through 10 for this subcategory. Section 9.0 describes the technology options. EPA did not consider oily wastewater treatment using oil/water separation through emulsion breaking (Options 5 and 6) for this subcategory because a large number of railroad line maintenance facilities currently use DAF (Options 9 and 10). As explained above, EPA only

discusses Options 8 and 10 in detail in this section since these options costed less and removed more pollutants than Options 7 and 9, respectively.

The Agency selected Option 10, oil/water separation by DAF, as the basis for the new BPT regulation for the Railroad Line Maintenance Subcategory. EPA's decision to propose BPT limitations based on Option 10 treatment reflects primarily two factors: (1) the degree of effluent reductions attainable and (2) the total cost of the proposed treatment technologies in relation to the effluent reductions achieved. No basis could be found for identifying different BPT limitations based on age, size, process, or other engineering factors. Neither the age nor the size of a facility in the Railroad Line Maintenance Subcategory will directly affect the treatability of MP&M process wastewater. For facilities in this subcategory, the most pertinent factors for establishing the limitations are costs of treatment and the level of effluent reductions obtainable.

Table 14-1 presents the annual pollutant removals for direct dischargers for Option 10; Table 14-2 presents the cost per pound removed using only the pounds of oil and grease removed. EPA estimates that implementation of Option 10 will cost $20.00 per pound of COD removed (1996 dollars). The Agency has concluded that the costs of BPT Option 10 are achievable and are reasonable as compared to the removals achieved by this option.

The technology proposed in Option 10 represents the average of the best performing facilities due to the prevalence of DAF in this subcategory. The Agency estimates that 91 percent of the direct discharging facilities in the Railroad Line Maintenance Subcategory employ DAF (Option 10), while no facilities employ ultrafiltration (Option 8). Because no facilities in this subcategory employ ultrafiltration to remove oil and grease, the Agency concluded that Option 8 does not represent BPT. Table 14-10 lists the proposed BPT effluent limitations for the Railroad Line Maintenance Subcategory.

EPA’s data editing procedures and statistical methodology for calculating BPT limitations are explained in Section 10.0. EPA calculated BPT limitations for this subcategory using data from facilities in the Railroad Line Maintenance subcategory employing Option 10 technology. In cases where data from the Railroad Line Maintenance subcategory was not sufficient for a particular pollutant, the Agency transferred effluent data from facilities in the Shipbuilding Dry Dock subcategory in order to develop a proposed BPT limitation.

Existing direct discharging facilities in the Railroad Line Maintenance Subcategory must achieve the following effluent limitations representing the application of BPT. Discharges must remain within the pH range 6 to 9 and must not exceed the following.

Table 14-10

BPT Effluent Limitations for the Railroad Line Maintenance Subcategory

Regulated Parameter		Maximum Daily (mg/L (ppm))	Maximum Monthly Avg. (mg/L (ppm))
1.	BOD_5	34	12
2.	Total Suspended Solids (TSS)	30	16
3.	Oil and Grease (as HEM)	11	8

14.1.8 BPT Technology Selection for the Shipbuilding Dry Dock Subcategory

Section 6.2.8 describes the Shipbuilding Dry Dock Subcategory. The Agency estimates there are six direct discharging facilities in this subcategory. The Agency notes that many shipbuilders operate multiple dry docks (or similar structures) and that this is the number of estimated facilities (not dry docks) that discharge MP&M process wastewater from dry docks (and similar structures). EPA determined that BPT limitations for this subcategory were necessary because of the oil and grease and potential TSS loads that facilities in this subcategory generate. EPA estimates that direct discharging facilities in the Shipbuilding Dry Dock Subcategory currently discharge substantial quantities of pollutants to the surface waters of the United States, including 8.5 million pounds per year of oil and grease, 18,400 pounds per year of TSS, 976,000 pounds per year of COD, 88,500 pounds per year of priority and nonconventional metal pollutants, and 6,000 pounds per year of priority and nonconventional organic pollutants. As a result of the quantity of pollutants currently discharged directly to the nation's waters by shipbuilding dry dock facilities, EPA determined that there is a need for BPT regulation for this subcategory.

Facilities in the Shipbuilding Dry Dock Subcategory generally perform unit operations that produce mainly oil-bearing wastewater, such as abrasive blasting, hydroblasting, painting, welding, corrosion preventive coating, floor cleaning, aqueous degreasing, and testing (e.g., hydrostatic testing). Because of the oily nature of the wastewater, EPA considered technology options 7 through 10 for this subcategory. Section 9.0 describes the technology options. EPA did not consider oily wastewater treatment using oil/water separation through chemical emulsion breaking (Options 5 and 6) for this subcategory because all of the shipbuilding dry dock facilities in EPA's database currently use DAF (Options 9 and 10). As explained above, EPA only discusses Options 8 and 10 in detail in this section since these options costed less and removed more pollutants than Options 7 and 9, respectively.

The Agency selected Option 10, oil/water separation by DAF, as the basis for the new BPT regulation for the Shipbuilding Dry Dock Subcategory. EPA's decision to propose BPT limitations based on Option 10 treatment reflects primarily two factors: (1) the degree of

effluent reductions attainable and (2) the total cost of the proposed treatment technologies in relation to the effluent reductions achieved. No basis could be found for identifying different BPT limitations based on age, size, process, or other engineering factors. Neither the age nor the size of a facility in the Shipbuilding Dry Dock Subcategory will directly affect the treatability of MP&M process wastewater. For facilities in this subcategory, the most pertinent factors for establishing the limitations are costs of treatment and the level of effluent reductions obtainable.

Table 14-1 presents the annual pollutant removals for direct dischargers for Option 10; Table 14-2 presents the cost per pound removed using only the pounds of oil and grease removed. EPA estimates that implementation of Option 10 will cost $0.25 per pound of oil and grease removed (1996 dollars). The Agency has concluded that the costs of BPT Option 10 are achievable and are reasonable as compared to the removals achieved by this option.

The technology proposed in Option 10 represents the average of the best performing facilities due to the prevalence of DAF in this subcategory. According to EPA's database, 100 percent of the direct discharging facilities in the Shipbuilding Dry Dock Subcategory employ DAF (Option 10) while no facilities employ ultrafiltration (Option 8). Because no facilities in this subcategory employ ultrafiltration to remove oil and grease, the Agency concluded that Option 8 does not represent best practicable control technology. Table 14-11 lists the proposed BPT effluent limitations for the Shipbuilding Dry Docks Subcategory.

EPA's data editing procedures and statistical methodology for calculating BPT limitations are explained in Section 10.0. EPA calculated BPT limitations for this subcategory using data from facilities in the Shipbuilding Dry Dock subcategory employing Option 10 technology.

Existing direct discharging facilities in the Shipbuilding Dry Dock Subcategory must achieve the following effluent limitations representing the application of BPT. Discharges must remain within the pH range 6 to 9 and must not exceed the following.

Table 14-11

BPT Effluent Limitations for the Shipbuilding Dry Dock Subcategory

Regulated Parameter		Maximum Daily[1]	Maximum Monthly Avg.[1]
1.	Total Suspended Solids (TSS)	81	44
2.	Oil and Grease (as HEM)	16	11

14.2 Best Conventional Pollutant Control Technology (BCT)

The BCT methodology, promulgated in 1986 (51 FR 24974), discusses the Agency's consideration of costs in establishing BCT effluent limitations guidelines. EPA evaluates the reasonableness of BCT candidate technologies (those that are technologically feasible) by applying a two-part cost test:

(1) The POTW test; and
(2) The industry cost-effectiveness test.

In the POTW test, EPA calculates the cost per pound of conventional pollutant removed by industrial dischargers in upgrading from BPT to a BCT candidate technology and then compares this cost to the cost per pound of conventional pollutant removed in upgrading POTWs from secondary treatment. The upgrade cost to industry must be less than the POTW benchmark of $0.25 per pound (in 1976 dollars).

In the industry cost-effectiveness test, the ratio of the incremental BPT to BCT cost divided by the BPT cost for the industry must be less than 1.29 (i.e., the cost increase must be less than 29 percent).

14.2.1 BCT Option for Metal-Bearing Wastewater

For the MP&M proposed rule, EPA considered whether or not to establish BCT effluent limitations guidelines for MP&M sites that would attain incremental levels of effluent reduction beyond BPT for TSS. The only technology option identified to attain further TSS reduction is the addition of multimedia filtration to existing BPT systems. For the BCT option, EPA considered adding multimedia filtration to the BPT technology option for the General Metals, Metal Finishing Job Shops, Non-Chromium Anodizing, Printed Wiring Board, and Steel Forming and Finishing Subcategories (i.e., the metal-bearing subcategories).

EPA applied the BCT cost test to the use of multimedia filtration technology as a means to reduce TSS loadings. EPA split the MP&M sites into three flow categories: less than 10,000 gallons per year (gpy)), 10,000 gpy and 1,000,000 gpy; and greater than 1,000,000 gpy. For each of these three flow categories, EPA chose a representative site for which EPA had estimated the costs of installing the Option 2 technologies discussed under BPT (see Section 14.1 above). The Agency evaluated the costs of installing a polishing multimedia filter to remove an estimated additional 35 percent of the TSS discharged after chemical precipitation and clarification treatment. This estimated removal reflects the reduced TSS concentrations seen when filters are used after chemical precipitation and sedimentation in the MP&M industry. The cost per pound removed for facilities discharging greater than 1 million gallons per year (1 MGY) was $13/lb of TSS (in 1976 dollars), the cost per pound removed for facilities discharging between 10,000 and 1,000,000 gpy was $518/lb, and the cost per pound removed for facilities discharging less than 10,000 gpy was $1,926/lb of TSS (in 1976 dollars). All of these cases individually as well as combined exceed the $0.25/lb (in 1976 dollars) POTW cost test

value. Because these costs exceed the POTW benchmark, the first part of the cost test fails; therefore, the second part of the test was unnecessary. As a result, EPA determined that multimedia filtration does not pass the cost test for BCT regulations development. In light of the above, EPA is proposing to set BCT limitations for the General Metals, Metal Finishing Job Shops, Non-Chromium Anodizing, Printed Wiring Board, and Steel Forming and Finishing Subcategories equivalent to BPT limitations for their respective subcategories.

14.2.2 BCT Option for Oil-Bearing Wastewater

For the MP&M proposed rule, EPA considered whether or not to establish BCT effluent limitations guidelines for MP&M facilities that would attain incremental levels of effluent reduction beyond BPT for oil and grease. EPA considered adding an ultrafilter to existing BPT systems (oil/water separation by chemical emulsion breaking, gravity separation, and oil skimming) as a viable technology option to attain further oil and grease reduction. EPA considered this BCT option for the Oily Wastes, Railroad Line Maintenance, and Shipbuilding Dry Dock Subcategories.

EPA applied the BCT cost test to the use of ultrafiltration technology as a means to reduce oil and grease loadings. EPA split the MP&M sites into three flow categories: less than 10,000 gpy, 10,000 gpy to 1,000,000 gpy; and greater than 1,000,000 gpy. For each of these three flow categories, EPA chose a representative site for which EPA had estimated the costs of installing the Option 2 technologies discussed under BPT (See Section 14.1 above). The Agency evaluated the costs of installing an ultrafilter to remove an estimated additional 36 percent of the oil and grease discharged after oil/water separation by chemical emulsion breaking, gravity separation, and oil skimming. This estimated removal reflects the reduced oil and grease concentrations seen when ultrafilters are used after chemical emulsion breaking with oil skimming in the MP&M industry. The cost per pound removed for facilities discharging greater than 1 MGY was $238/lb of oil and grease (in 1976 dollars), the cost per pound removed for facilities discharging between 10,000 and 1 MGY was $2,213/lb, and the cost per pound removed for facilities discharging less than 10,000 gpy was $5,031/lb of oil and grease (in 1976 dollars). All of these cases individually as well as combined exceed the $0.25/lb (in 1976 dollars) POTW cost test value. Because these costs exceed the POTW benchmark, the first part of the cost test fails; therefore, the second part of the test was unnecessary. Therefore, EPA determined that ultrafiltration does not pass the cost test for BCT regulations development. In light of the above, EPA is proposing to set BCT limitations for the Oily Wastes, Railroad Line Maintenance and Shipbuilding Dry Dock Subcategories equivalent to BPT limitations for their respective subcategories.

14.3 <u>Best Available Technology Economically Achievable (BAT)</u>

EPA considers the following factors in establishing the best available technology economically achievable (BAT) level of control: the age of process equipment and facilities, the processes employed, process changes, the engineering aspects of applying various types of control techniques, the costs of applying the control technology, economic impacts imposed by

the regulation, non-water quality environmental impacts such as energy requirements, air pollution, and solid waste generation, and other such factors as the Administrator deems appropriate (section 304(b)(2)(B) of CWA). In general, the BAT technology level represents the best existing economically achievable performance among plants with shared characteristics. In making the determination about economic achievability, the Agency takes into consideration factors such as plant closures and product line closures. Where existing wastewater treatment performance is uniformly inadequate, BAT technology may be transferred from a different subcategory or industrial category. BAT may also include process changes or internal plant controls that are not common industry practice.

EPA considered the same 10 technology options for BAT as discussed under BPT. EPA did not include the application of filters, discussed under BCT, as a BAT option. Data collected during sampling at MP&M facilities demonstrated very little, if any, additional removal of many metal pollutants resulting from the use of filters as compared to concentrations of the same metals after the chemical precipitation and clarification treatment followed by gravity settling. Thus, although filtration is demonstrated to be effective in achieving additional removals of suspended solids and, as such, EPA considered it for the basis of BCT, multimedia or sand filtration does not reflect the best available technology performance for priority and nonconventional pollutants.

For all of the MP&M subcategories (except the Railroad Line Maintenance and Shipbuilding Dry Dock Subcategories), EPA is proposing BAT limitations equivalent to BPT. For the Railroad Line Maintenance and Shipbuilding Dry Dock subcategories, EPA is not proposing BAT limitations. EPA briefly discusses the BAT selection for each of the subcategories in Sections 14.3.1 through 14.3.8.

14.3.1 BAT Technology Selection for the General Metals Subcategory

EPA has not identified any more stringent economically achievable treatment technology option that it considered to represent BAT level of control applicable to General Metals Subcategory facilities. Therefore, the Agency is proposing to establish BAT equivalent to BPT for toxic and nonconventional pollutants for the General Metals Subcategory. EPA estimates that 20 facilities (less than 1 percent of the direct dischargers in this subcategory) will close as a result of BAT based on Option 2. EPA found this option to be economically achievable for the subcategory as a whole. Additionally, the Agency believes that Option 2 represents the “best available” technology as it achieves a high level of pollutant control, treating all priority pollutants to very low levels, often at or near the analytical minimum level.

EPA did evaluate BPT Option 4 as a basis for establishing BAT more stringent than the BPT level of control being proposed. EPA estimates that the economic impact due to the additional controls at Option 4 levels would result in 35 facility closures (<1 percent of the direct dischargers in this subcategory). The Economic, Environmental, and Benefits Analysis of the Proposed Metal Products & Machinery Rule [EPA-821-B-00-0058] discusses job losses. While EPA does not have a bright line for determining what level of impact is economically

achievable for the industry as a whole, EPA looked for a breakpoint that would mitigate adverse economic impacts without greatly affecting the toxic pound-equivalents being removed under the proposed rule. By selecting Option 2 as BAT, EPA was able to reduce facility closures by 43 percent, while only losing about 1.5 percent of the toxic pound equivalents that would be removed under Option 4. Option 4 resulted in some level of improved pollutant reductions; however, the amounts are not very large and the cost of implementing the level of control associated with Option 4 is disproportionately high. Thus, EPA rejected Option 4 as a basis for BAT for this subcategory.

14.3.2 BAT Technology Selection for the Metal Finishing Job Shops Subcategory

The Agency proposes to establish BAT equivalent to BPT for toxic and nonconventional pollutants for the Metal Finishing Job Shops Subcategory. EPA estimates that no facilities will close as a result of BAT based on Option 2. Therefore, the Agency found this option to be economically achievable. Additionally, the Agency believes that Option 2 represents the "best available" technology as it achieves a high level of pollutant control, treating all priority pollutants to very low levels, often at or near the analytical minimum level.

EPA did evaluate transferring technology reflected in BPT Option 4 as a basis for establishing BAT more stringent than the BPT level of control being proposed. As was the case for BAT based on Option 2, EPA estimates that no facilities will close as a result of BAT based on Option 4. Therefore, EPA does consider Option 4 to be economically achievable for this subcategory. However, EPA is not proposing to establish BAT limitations based on Option 4 because it determined that Option 2 achieves nearly equivalent reductions in pound-equivalents for much less cost. By selecting Option 2 as the basis for BAT, EPA reduced annualized compliance costs by $1.1 million (1996 dollars) while only losing 2 percent of the toxic pound-equivalents that would be removed under Option 4. The Agency concluded that the additional costs of Option 4 do not justify the lack of significant additional pollutant removals achieved for direct dischargers in this subcategory. Therefore, EPA determined that Option 2 is the "best available" technology economically achievable for the Metal Finishing Job Shops Subcategory.

14.3.3 BAT Technology Selection for the Non-Chromium Anodizing Subcategory

The Agency proposes to establish BAT equivalent to BPT for toxic and nonconventional pollutants for the Non-Chromium Anodizing Subcategory. As mentioned in the BPT discussion, EPA's survey of the MP&M industry did not identify any non-chromium anodizing facilities discharging directly to surface waters. All of the non-chromium anodizing facilities in EPA's data base are either indirect or zero dischargers. EPA consequently could not evaluate any treatment systems in place at direct discharging non-chromium anodizing facilities for establishing BAT limitations. Therefore, EPA relied on information and data from indirect discharging facilities in the Non-Chromium Anodizing Subcategory. Based on this analysis, the Agency believes that Option 2 represents the "best available" technology as it achieves a high level of pollutant control, treating all priority pollutants to very low levels, often at or near the analytical minimum level.

EPA evaluated transferring technology reflected in BPT Option 4 as a basis for establishing BAT more stringent than the BPT level of control being proposed. However, EPA is not proposing to establish BAT limitations based on Option 4 because it determined that Option 2 achieves nearly equivalent reductions in pound-equivalents for much less cost. EPA used a facility with a flow of 6.25 MGY (the median discharge flow for indirect discharging facilities in this subcategory) to model the costs and pollutant loads reduction for a direct discharging facility. Because direct dischargers are more likely to have treatment in place, EPA provided the model facility with treatment in place equivalent to Option 1. Based on this model facility, EPA estimated that annualized compliance costs per facility for Option 2 will be $41,000 (1996 dollars) less than Option 4, and Option 2 will remove only 83 pound-equivalents less than Option 4. The Agency concluded that the additional costs of Option 4 do not justify the additional pollutant removals achieved for direct dischargers in this subcategory. Therefore, EPA determined that Option 2 is the "best available" technology economically achievable for the Non-Chromium Anodizing Subcategory.

14.3.4 BAT Technology Selection for the Printed Wiring Board Subcategory

The Agency proposes establishing BAT equivalent to BPT for toxic and nonconventional pollutants for the Printed Wiring Board Subcategory. EPA estimates that no facilities will close as a result of BAT based on Option 2. Therefore, the Agency found this option to be economically achievable. Additionally, the Agency believes that Option 2 represents the "best available" technology as it achieves a high level of pollutant control, treating all priority pollutants to very low levels, often at or near the analytical minimum level.

EPA evaluated BPT Option 4 as a basis for establishing BAT more stringent than the BPT level of control being proposed. As was the case for BAT based on Option 2, EPA estimates that no facilities will close as a result of BAT based on Option 4. Therefore, EPA considers Option 4 to be economically achievable for this subcategory. However, EPA is not proposing to establish BAT limitations based on Option 4 because it determined that Option 2 achieves nearly equivalent reductions in pound-equivalents for much less cost. By selecting Option 2 as the basis for BAT, EPA reduced annualized compliance costs by $2 million (1996 dollars) while only losing 3 percent of the toxic pound-equivalents that would be removed under Option 4. The Agency concluded that the additional costs of Option 4 do not justify the lack of significant additional pollutant removals achieved for direct dischargers in this subcategory. Therefore, EPA determined that Option 2 is the "best available" technology economically achievable for the Printed Wiring Board Subcategory.

14.3.5 BAT Technology Selection for the Steel Forming and Finishing Subcategory

The Agency proposes establishing BAT equivalent to BPT for toxic and nonconventional pollutants for the Steel Forming and Finishing Subcategory. EPA estimates that no facilities will close as a result of BAT based on Option 2. Therefore, the Agency found this option to be economically achievable. Additionally, the Agency believes that Option 2

represents the "best available" technology as it achieves a high level of pollutant control, treating all priority pollutants to very low levels, often at or near the analytical minimum level.

EPA evaluated transferring technology reflected in BPT Option 4 as a basis for establishing BAT more stringent than the BPT level of control being proposed. EPA is not proposing to establish BAT limitations based on Option 4 because it determined that Option 2 achieves nearly equivalent reductions in pound-equivalents for much less cost. By selecting Option 2 as the basis for BAT, EPA reduced annualized compliance costs by $2.6 million (1996 dollars) while only losing 3 percent of the toxic pound-equivalents that would be removed under Option 4. The Agency concluded that the additional costs of Option 4 do not justify the insignificant additional pollutant removals achieved for direct dischargers in this subcategory.

14.3.6 BAT Technology Selection for the Oily Wastes Subcategory

EPA has not identified any more stringent economically achievable treatment technology option that it considered to represent BAT level of control applicable to Oily Wastes Subcategory facilities. Therefore, the Agency is proposing to establish BAT equivalent to BPT for toxic and nonconventional pollutants for the Oily Wastes Subcategory. EPA estimates that no facilities will close as a result of BAT based on Option 6. Additionally, the Agency believes that Option 6 represents the "best available" technology as it achieves a high level of pollutant control, treating all priority pollutants to very low levels, often at or near the analytical minimum level.

EPA evaluated BPT Option 8 (ultrafiltration) as a basis for establishing BAT more stringent than the BPT level of control being proposed. As was the case for BAT based on Option 6, EPA estimates that no facilities would close as a result of BAT based on Option 8. Therefore, EPA does consider Option 8 to be economically achievable for this subcategory. However, based on the available data base, EPA is not proposing to establish BAT limitations based on Option 8 because it removes fewer pound-equivalents than Option 6. Therefore, the Agency determined that Option 6 is the "best available" technology economically achievable for the removal of priority pollutants from wastewater generated at Oily Wastes Subcategory facilities.

14.3.7 BAT Technology Selection for the Railroad Line Maintenance Subcategory

EPA is not proposing to establish BAT regulations for the Railroad Line Maintenance Subcategory. The Agency concluded that the facilities in this subcategory discharge very few pounds of toxic pollutants. EPA estimates that 34 railroad line maintenance facilities discharge 1,100 pound-equivalents per year to surface waters, or about 32 pound-equivalents per year per facility. The Agency based the loadings calculations on EPA sampling data, which found very few priority toxic pollutants at treatable levels in raw wastewater. Therefore, nationally-applicable regulations are unnecessary at this time and direct dischargers will remain subject to permit limitations for toxic and nonconventional pollutants established on a case-by-case basis using best professional judgement.

14.3.8 BAT Technology Selection for the Shipbuilding Dry Dock Subcategory

EPA is not proposing to establish BAT regulations for the Shipbuilding Dry Dock Subcategory because of the small number of facilities in this subcategory. EPA estimates there are six shipbuilding facilities operating one or more dry docks in the U.S. that discharge directly to surface waters. EPA determined that nationally applicable regulations are unnecessary at this time because of the small number of facilities in this subcategory. The Agency believes that limitations established on a case-by-case basis using best professional judgement can more appropriately address individual toxic and nonconventional pollutants that may be present at these six facilities.

14.4 Pretreatment Standards for Existing Sources (PSES)

Indirect dischargers in the MP&M industrial category, like the direct dischargers, use raw materials that contain many priority pollutant and nonconventional metal pollutants. These indirect discharging facilities may discharge many of these pollutants to POTWs at significant mass or concentration levels, or both. EPA estimates that indirect discharging facilities annually discharge approximately 125 million pounds of priority and nonconventional metals, and 47 million pounds of priority and nonconventional organic pollutants.

Unlike direct dischargers whose wastewater will receive no further treatment once it leaves the facility, indirect dischargers send their wastewater to POTWs for further treatment (unless there is a bypass, upset, or sewer overflow). EPA establishes pretreatment standards for those BAT pollutants that pass through POTWs. Therefore, for indirect dischargers, before proposing pretreatment standards, EPA examines whether the pollutants discharged by the industry “pass through” POTWs to waters of the U.S. or interfere with POTW operations or sludge disposal practices on a national basis. Generally, to determine if pollutants pass through POTWs, EPA compares the percentage of the pollutant removed by well-operated POTWs achieving secondary treatment with the percentage of the pollutant removed by facilities meeting BAT effluent limitations. In this manner, EPA can ensure that the combined treatment at indirect discharging facilities and POTWs is at least equivalent to that obtained through treatment by direct dischargers.

This approach to the definition of pass-through satisfies two competing objectives set by Congress: (1) that standards for indirect dischargers be equivalent to standards for direct dischargers, and (2) that the treatment capability and performance of POTWs be recognized and taken into account in regulating the discharge of pollutants from indirect dischargers. Rather than compare the mass or concentration of pollutants discharged by POTWs with the mass or concentration of pollutants discharged by BAT facilities, EPA compares the percentage of the pollutants removed by BAT facilities to the POTW removals. EPA takes this approach because a comparison of the mass or concentration of pollutants in POTW effluents with pollutants in BAT facility effluents would not take into account the mass of pollutants discharged to the POTW from other industrial and nonindustrial sources, nor the dilution of the pollutants in the POTW to

lower concentrations from the addition of large amounts of other industrial and nonindustrial water.

The primary source of the POTW percent removal data is the Fate of Priority Pollutants in Publicly Owned Treatment Works (EPA 440/1-82/303, September 1982), commonly referred to as the "50-POTW Study." This study presents data on the performance of 50 well-operated POTWs that employ secondary biological treatment in removing pollutants. Each sample was analyzed for three conventional, 16 nonconventional, and 126 priority toxic pollutants.

Section 7.0 discusses the results of the POTW pass-through analysis for indirect dischargers for each subcategory. The appendix to Section 7.0 discusses additional revisions that the Agency is considering to the editing criteria applied to the 50-POTW database.

14.4.1 Overview of Options and Low-Flow Exclusions

Indirect discharging MP&M facilities generate wastewater with similar pollutant characteristics to direct discharging facilities. Therefore, in evaluating technology options for PSES, EPA considered the same 10 treatment technologies discussed previously for BPT and BAT. However, as described below, along with the technology options, EPA also evaluated "low flow" exclusions for indirect discharging facilities.

For each subcategory, EPA evaluated various low-flow exclusions (also referred to as "flow cutoffs") for indirect dischargers. The Agency considered several factors in determining what flow level, if any, is appropriate for excluding facilities from compliance with pretreatment standards. For several of the subcategories, EPA considered the local control authorities' increased burden associated with the development of new permits or other control mechanisms for MP&M facilities. For some subcategories, the Agency considered flow exclusions as a way to reduce economic impacts. The Economic, Environmental, and Benefits Analysis of the Proposed Metal Products & Machinery Rule [EPA-821-B-00-0058] discusses job losses. EPA also considered the amount of pollutants (in pound-equivalents) discharged per year by the subcategory and by each of the facilities on an average annual basis in conjunction with the costs of regulation, to identify an appropriate level for an exclusion. In cases where EPA selected an option that also specifies a flow cutoff, it means that facilities with annual wastewater flow below the cutoff would not be subject to the MP&M categorical pretreatment standards. These facilities would remain subject to the general pretreatment regulation at 40 CFR 403. Some of these options would require excluded facilities to remain covered by categorical pretreatment standards under 40 CFR 413 (Electroplating) and 40 CFR 433 (Metal Finishing). In addition, some indirect discharging facilities in the General Metals Subcategory that discharge less than 1 MGY will remain covered by the pretreatment standards in 40 CFR 433. EPA is not proposing pretreatment standards for the Non-Chromium Anodizing Subcategory. Therefore, all indirect discharging facilities in this subcategory will remain subject to the applicable pretreatment standards in 40 CFR 413 or 40 CFR 433.

Table 14-12 summarizes the pounds of pollutants removed by the proposed options for indirect dischargers in each subcategory, and Table 14-13 summarizes the costs and economic impacts associated with the proposed options for indirect dischargers in each subcategory with proposed standards. EPA is not proposing pretreatment standards for the Non-Chromium Anodizing, Railroad Line Maintenance, and Shipbuilding Dry Dock Subcategories for the reasons described later in this section. (See Section 14.1 for summary tables for direct dischargers). Section 10.0 describes EPA's data editing procedures and statistical methodology for calculating the proposed effluent limits.

Table 14-12

Annual Pounds of Pollutants Removed by the Proposed PSES Option for Indirect Dischargers by Subcategory

Subcategory (Number of Facilities)	Selected Option (Flow Cutoff)	Priority and Nonconventional Metals (lbs-removed/yr)	Priority and Nonconventional Organics (lbs-removed/yr)	Cyanide (lbs-removed/yr)
General Metals (3,055)	Option 2 (1 MGY)	28.1 million	7.7 million	284,000
Metal Finishing Job Shops (1,514)	Option 2	2.4 million	47,000	1 million
Printed Wiring Boards (621)	Option 2	2.6 million	14,000	230,000
Steel Forming and Finishing (110)	Option 2	617,000	16,000	181
Oily Waste (226)	Option 6 (2 MGY)	191,000	1.1 million	0

Table 14-13

Annual Costs and Economic Impacts of the Proposed PSES Option for Indirect Dischargers by Subcategory

Subcategory (Number of Facilities)	Selected Option (Flow Cutoff)	Annualized Compliance Costs for Selected Option (1996 $)	Economic Impacts (Facility Closures) of Selected Option (Percentage of Regulated Subcategory[a])
General Metals (3,055)	Option 2 (1 MGY)	1.57 billion	24 (<1%)
Metal Finishing Job Shops (1,514)	Option 2	178 million	128 (10%)
Printed Wiring Boards (621)	Option 2	147 million	7 (1%)
Steel Forming and Finishing (110)	Option 2	24 million	6 (6%)
Oily Waste (226)	Option 6 (2 MGY)	10 million	14 (<1%)

[a] Baseline closures will not be regulated and, therefore, are not included when estimating the percentage of regulatory closures (% regulatory closures = the regulatory closures/all facilities in subcategory excluding baseline closures).

14.4.2 PSES for General Metals Subcategory

As discussed in Section 14.4, one of the factors that EPA uses to determine the need for pretreatment standards is whether the pollutants discharged by an industry pass through a POTW. The Agency only applied the pass-through analysis to pollutants that it selected for regulation under BAT. For the General Metals Subcategory, EPA determined that 13 pollutants pass through; therefore, EPA proposes pretreatment standards equivalent to BAT for these pollutants. In addition, EPA is proposing a standard for total sulfide based on potential POTW interference or upset associated with discharges of total sulfide from MP&M facilities. EPA is also proposing standards for TOC and TOP as part of a compliance alternative for organic pollutant discharges. (See Section 7 for a more detailed discussion of the pass-through analysis).

As discussed in Section 14.4.1, in the Agency's engineering assessment of the best available technology for pretreatment of wastewater from the General Metals Subcategory, EPA considered the same technology options for PSES as it did for BAT with the additional consideration of a flow cutoff. The Agency selected BAT Option 2 with a 1 MGY flow cutoff for PSES. EPA selected Option 2 for many of the same reasons it selected that option for BPT and BAT (See Sections 14.1.1 and 14.3.1) and provides additional rationale below.

EPA determined that Option 2 represented the best available technology and that Option 2 with a 1 MGY flow cutoff was economically achievable and greatly reduced the burden on POTWs. This option results in 24 facility closures (less than 1 percent of the indirect discharging General Metals Subcategory population). Additionally, the Agency believes that Option 2 represents the "best available" technology as it achieves a high level of pollutant control, treating all priority pollutants to very low levels, often at or near the analytical minimum level. Approximately 15 percent of the indirect discharging facilities in the General Metals Subcategory employ chemical precipitation followed by a sedimentation (Option 2) while 1 percent employ microfiltration after chemical precipitation (Option 4).

EPA did evaluate Option 4 with a 1 MGY flow cutoff as a basis for establishing PSES. EPA estimates that the economic impact due to the additional controls at Option 4 levels would result in 92 facility closures (less than 1 percent of the indirect dischargers in this subcategory). While EPA does not have a bright line for determining what level of impact is economically achievable for the industry as a whole, EPA looked for a breakpoint that would mitigate adverse economic impacts without greatly affecting the toxic pound-equivalents being removed under the proposed rule. By selecting Option 2 as PSES, EPA was able to reduce facility closures by more than two-thirds, while losing only a little over one percent of the toxic pound-equivalents from control under Option 4. The Agency concluded that the additional facility closures associated with Option 4 do not justify the insignificant additional pollutant removals achieved for indirect dischargers in this subcategory.

Considering the large number of indirect dischargers in the General Metals Subcategory that have the potential to be covered by this proposed regulation, an important issue to the affected industry and to permit writers is the potentially enormous administrative burden associated with issuing permits or other control mechanisms for all of these facilities. Therefore, in developing this proposal, EPA has looked for means of reducing the administrative burden, monitoring requirements, and reporting requirements. To meet this end, the Agency is proposing a 1 MGY flow cutoff for the General Metals Subcategory. Under this proposed option, facilities in the General Metals Subcategory that discharge greater than 1 MGY of MP&M process wastewater would be subject to the proposed categorical pretreatment standards. Facilities in the General Metals Subcategory that discharge 1 MGY or less would not be subject to MP&M PSES requirements. However, some of the facilities in this subcategory discharging under 1 MGY are currently covered by 40 CFR 433, Metal Finishing PSES or PSNS, and would remain subject to those pretreatment standards and the general pretreatment standards at 40 CFR 403.

The Agency determined that the 1 MGY flow cutoff was appropriate for the General Metals Subcategory based on several factors. First, and the most important factor, was the overall size of the General Metals Subcategory. EPA estimates that there are over 26,000 indirect discharging facilities in the General Metals Subcategory, of which 74 percent are not currently regulated by nationally established effluent guidelines. Establishing an MP&M pretreatment standard for all 26,000 facilities would greatly increase the number of permits or other control mechanisms for which local authorities are currently responsible (EPA estimates that there are approximately 30,000 control mechanisms today). EPA concluded that this

increased permit burden was not reasonable and therefore explored potential flow cutoffs as a way to reduce the impact on POTW permitting authorities.

Second, EPA is proposing the 1 MGY flow cutoff for this subcategory based in part on the small number of pound-equivalents that would be removed by facilities with annual wastewater flows less than or equal to 1 MGY. EPA determined that 89 percent of the indirect discharging facilities in the General Metals Subcategory discharge less than or equal to 1 MGY, yet these facilities are responsible for less than 6 percent of the total pound-equivalents currently discharged. If the Agency proposed pretreatment standards for facilities in the General Metals Subcategory that discharged less than or equal to 1 MGY, it estimates average removals of only 22 pound-equivalents per facility per year for those facilities. EPA recently decided not to promulgate pretreatment standards for two industrial categories, Industrial Laundries (64 FR 45072) and Landfills (65 FR 3008), based on low removals of toxic pound-equivalents by facilities in those categories. In the Industrial Laundries rule, EPA decided not to promulgate pretreatment standards based on 32 toxic pound-equivalents per facility per year, and, in the landfills effluent guidelines, EPA decided not to promulgate pretreatment standards for nonhazardous landfills based on the removal of only 14 toxic pound-equivalents per facility per year. In both instances, the Agency considered that the small additional removals that would be achieved through regulation did not warrant adoption of national categorical standards.

The Agency concluded that regulation of facilities discharging only 22 pound-equivalents per year was not justified by the additional permitting burden associated with these facilities. Although this decision is based upon a subset of small facilities, and not an entire subcategory as was done before, EPA believes this approach would allow control authorities to focus their efforts on the facilities discharging the vast majority of the pollutants, rather than dissipating their limited resources on sites contributing much less to the overall problem. EPA acknowledges that this may create an economic advantage for the smaller facilities, and solicited comment in the proposal on this exclusion.

EPA also closely evaluated Option 2 with a 2 MGY flow cutoff for the General Metals Subcategory. The Agency is not proposing this option because it does not reduce the number of facility closures (24) or significantly reduce the burden on control authorities. There is also a significant number of pound-equivalents associated with facilities discharging between 1 and 2 MGY. EPA determined that only 3 percent more of the facilities in this subcategory discharge between 1 and 2 MGY. This small number of facilities accounts for an additional 13 percent of the annual pollutant discharge load (in pound-equivalents). If EPA proposed Option 2 with a 2 MGY flow cutoff, the economic impacts would not be reduced. Based on these considerations, EPA is not proposing the 2 MGY flow cutoff for the General Metals Subcategory. EPA concluded that the 1 MGY flow cutoff was the most appropriate option in terms of balancing POTW burden reduction with pollutant removals and mitigating economic impacts. Table 14-12 shows the pounds of pollutants removed by the proposed option; Table 14-13 summarizes the costs and economic impacts associated with the proposed option. Table 14-14 lists the proposed PSES for the General Metals Subcategory. Where these General Metals facilities discharge less than or equal to 1 MGY to a POTW, these proposed pretreatment

standards do not apply; however, facilities are still subject to other applicable pretreatment standards, including those established under parts 413 and 433. Section 10.0 describes EPA's data editing procedures and statistical methodology for calculating the proposed effluent limitations.

Except at facilities where the process wastewater introduced into a POTW does not exceed 1 MGY, any existing indirect discharging facility in the General Metals Subcategory must achieve the following pretreatment standards.

Table 14-14

PSES for the General Metals Subcategory

Regulated Parameter		Maximum Daily (mg/L (ppm))	Maximum Monthly Avg. (mg/L (ppm))
1.	Total Organic Carbon (TOC) (as indicator)	87	50
2.	Total Organics Parameter (TOP)	9.09.0	4.34.3
3.	Cadmium	0.14	0.09
4.	Chromium	0.25	0.14
5.	Copper	0.55	0.28
6.	Total Cyanide	0.21	0.13
7.	Amenable Cyanide	0.14	0.07
8.	Lead	0.04	0.03
9.	Manganese	0.13	0.09
10.	Molybdenum	0.79	0.49
11.	Nickel	0.50	0.31
12.	Silver	0.22	0.09
13.	Sulfide, Total	31	13
14.	Tin	1.4	0.67
15.	Zinc	0.38	0.22

As discussed in Section 15.2.7, upon agreement with the permitting authority, facilities with cyanide treatment have the option of achieving the limitation for either total or amenable cyanide. Additionally, upon agreement with the permitting authority, facilities must choose to monitor for TOP or TOC, or implement a management plan for organic chemicals as specified in Section 15.2.7. A POTW has the option of imposing mass-based standards in place of the concentration based standards. To convert to mass-based standards, multiply each parameter's concentration-based standard times the average daily flow of process wastewater discharged by the source into the POTW.

14.4.3 PSES for the Metal Finishing Job Shops Subcategory

As discussed in Section 14.4, one of the factors that EPA uses to determine the need for pretreatment standards is whether the pollutants discharged by an industry pass through a POTW. The Agency only applies the pass-through analysis to pollutants that it selected for regulation under BAT. For the Metal Finishing Job Shops Subcategory, EPA determined that 12 pollutants pass through; therefore, EPA is proposing pretreatment standards equivalent to BAT for these pollutants. In addition, EPA is proposing a standard for total sulfide based on potential POTW interference or upset associated with discharges of total sulfide from MP&M facilities. EPA is also proposing standards for TOC and TOP as part of a compliance alternative for organic pollutant discharges. (See Section 7 for a more detailed discussion of the pass-through analysis).

As discussed in Section 14.4.1, in the Agency's engineering assessment of the best available technology for pretreatment of wastewater from the Metal Finishing Job Shops Subcategory, EPA considered the same technology options for PSES as it did for BAT with the additional consideration of a flow cutoff. The Agency selected BAT Option 2 for PSES for many of the same reasons it selected that option for BPT and BAT (See Section 14.1.2 and 14.3.2) and provides additional rationale below. EPA is proposing that pretreatment standards based on Option 2 be applied to all facilities (i.e., no flow exclusion) for the Metal Finishing Job Shops Subcategory.

The Agency estimates that 1,514 Metal Finishing Job Shops currently discharge MP&M process wastewater to POTWs. The Agency projects that 128 of these facilities (10 percent of the indirect discharging facilities when baseline closures are taken into consideration) might close as a result of the proposed option. EPA concluded that this level of impact was economically achievable for the subcategory as a whole but, in an effort to minimize the impacts, considered several flow exemptions and compliance alternatives.

The Agency believes that Option 2 represents the “best available” technology as it achieves a high level of pollutant control, treating all priority pollutants to very low levels, often at or near the analytical minimum level. Approximately 55 percent of the indirect discharging facilities in the Metal Finishing Job Shops Subcategory employ chemical precipitation followed by a sedimentation (Option 2) while less than 1 percent employ microfiltration after chemical precipitation (Option 4).

EPA did evaluate Option 4 as a basis for establishing PSES. EPA estimates that the economic impact due to the additional controls at Option 4 levels would result in 393 facility closures (32 percent of the indirect discharging facilities in this subcategory). Thus, EPA rejected Option 4 as not economically achievable.

The Agency evaluated Option 2 with several levels of flow cutoffs, compliance options, and various combinations of the two. EPA analyzed the cutoffs and alternative compliance options in terms of reduction in economic impacts and quantity of toxic pound-

equivalents discharged to the environment. EPA did not consider the reduction in POTW burden for this subcategory, unlike the General Metals Subcategory, because EPA has already established PSES for all of the facilities in this subcategory under 40 CFR 413 and 40 CFR 433, and local control authorities would not have to develop entirely new permits (or other control mechanisms) for these facilities.

EPA did consider alternatives. First, EPA analyzed a 1 MGY flow cutoff, which would exclude 831 of the 1,514 estimated Metal Finishing Job Shops facilities (or 457 of the 1,231 facilities after baseline closures are removed from the analysis), and would reduce the economic impacts for 23 of the 128 facilities EPA projected would close under Option 2. This represents less than 2 percent of the 1,231 metal finishing jobs that operate in the baseline and 18 percent of the projected facility closures under Option 2. This means that there are still 105 of the 128 facilities that EPA predicts to close with a 1 MGY flow cutoff. Further, EPA determined that the proposed regulation would control an average of 135 pound-equivalents per year from facilities discharging less than 1 MGY. This is higher than the level at which EPA has previously determined that discharges are not significant enough to warrant national regulation. Facilities discharging less than 1 MGY are associated with removals under the proposed option of about 61,000 pound-equivalents (or about 3 percent of the removals associated with the proposed option) at an incremental cost-effectiveness of about $300 per pound-equivalent (1981 dollars). This is higher than has generally been associated with pretreatment standards in the past, though not necessarily higher than has been associated with the smaller facilities regulated with pretreatment standards in the past. This is to be expected since smaller facilities incur the same level of costs for monitoring as larger facilities and are sometimes forced to purchase larger capacity treatment units than they would need due to availability. Nonetheless, the Agency concluded that the pollutant reductions associated with Option 2 were feasible and achievable and the economic impacts were not substantially mitigated under the 1 MGY flow cutoff, so a 1 MGY flow cutoff is not being proposed for the Metal Finishing Job Shops Subcategory.

Second, EPA considered an option with (a) MP&M pretreatment standards for facilities discharging greater than 1 MGY and (b) a pollution prevention alternative for those discharging less than 1 MGY. Under this option, EPA would exclude from the MP&M numeric pretreatment standards based on Option 2 those metal finishing job shops discharging less than 1 MGY that choose to perform the pollution prevention and water conservation activities discussed in the Appendix to this section (referred to as the “P2 alternative”). EPA would require the low flow facilities to continue to meet the pretreatment standards codified at 40 CFR Part 433, which remain unchanged by this proposed rule. All facilities discharging greater than 1 MGY (and those facilities discharging less than 1 MGY but not choosing the P2 alternative) would be subject to the MP&M pretreatment standards for this subcategory. In analyzing this option, EPA assumed that all facilities discharging less than 1 MGY chose the P2 alternative. EPA’s analysis shows that this option would reduce the facility closures for 23 of the 128 facilities EPA projected would close under Option 2 (no flow cutoff). As with the 1 MGY flow cutoff approach discussed above, this represents less than 2 percent of the 1,231 metal finishing job shops that operate in the baseline and about 18 percent of the closures projected by the proposed option. Further, although the P2 alternative would be somewhat effective in reducing toxic discharges,

the option is not as protective as the numeric pretreatment standards based on Option 2. For facilities discharging less than 1 MGY, EPA estimates that the P2 alternative would control 59 pound-equivalents per facility per year (compared to 135 pound-equivalents per facility at Option 2). Thus, EPA is not proposing the option of a 1 MGY flow cutoff combined with a P2 alternative for the proposed rule.

Third, EPA analyzed a 2 MGY flow cutoff, which would exclude 1,024 facilities (66 percent) from MP&M pretreatment standards. Excluding a larger number of facilities (compared to the 1 MGY cutoff option) resulted in a smaller number of facility closures. For this option, EPA predicts that 59 facilities (approximately 5 percent of the indirect discharging facilities) might close. EPA estimates that the facilities discharging less than 2 MGY represent less than 12 percent of the total pound-equivalents currently discharged by facilities in this subcategory. For facilities discharging less than 2 MGY, EPA estimates that pretreatment standards would remove an average of 189 pound-equivalents per facility per year. While a 2 MGY flow cutoff reduces the number of facility closures, EPA concluded that the pollutant reductions associated with Option 2 were feasible and achievable and is not proposing a 2 MGY flow cutoff.

Fourth, EPA analyzed the 2 MGY flow cutoff with the P2 alternative for those facilities below the cutoff. Under this option, EPA would exclude from the MP&M numeric pretreatment standards based on Option 2 those metal finishing job shops discharging less than 2 MGY that choose to perform the P2 alternative. EPA would require the low-flow facilities to continue to meet the pretreatment standards codified at 40 CFR Part 433, which remain unchanged by this proposed rule. All facilities discharging greater than 2 MGY (and those facilities discharging less than 2 MGY but not choosing the P2 alternative) would be subject to the MP&M pretreatment standards for this subcategory. In analyzing this option, EPA assumed that all facilities discharging less than 2 MGY chose the P2 alternative. EPA's analysis shows that this option may not reduce the number of facility closures any further than a 1 MGY flow cutoff (or 1 MGY P2 alternative). The model facilities representing the facilities that close with flows of 2 MGY or less would require annualized costs to be reduced at least 68 percent in order to avoid closure. Since there are some compliance costs associated with implementing the practices of the P2 alternative, EPA estimates that these may close under the P2 alternative. Although the P2 alternative reduces the number of facility closures as compared to an option with no flow cutoff, the option is not as protective as numeric pretreatment standards based on Option 2. For facilities discharging less than 2 MGY, EPA estimates that the P2 alternative would control an average of 67 pound-equivalents per facility per year (compared to 189 pound-equivalents per facility at Option 2). Thus, EPA is not proposing the option of 2 MGY flow cutoff combined with a P2 alternative.

In summary, for all of the flow cutoff and P2 alternatives that EPA considered for this subcategory, the Agency identified no combination that would significantly reduce the economic impacts without also significantly reducing control of pollutants. At all the flow cutoffs and compliance alternatives, EPA concluded that the potential removals the Agency would be choosing to forego were above levels which EPA has previously determined

insufficient to warrant national categorical pretreatment standards. Thus, EPA is not proposing a flow cutoff for this subcategory. Under the proposed option all facilities in this subcategory would be subject to the pretreatment standards, which would reduce pass-through of pollutants based on a technology EPA has determined to be technologically feasible and economically achievable.

The Appendix to this section discusses the P2 alternative. Table 14-12 shows the pounds of pollutants removed by the proposed option; Table 14-13 summarizes the costs and economic impacts associated with the proposed option. Table 14-15 lists PSES for the Metal Finishing Job Shops Subcategory. Section 10.0 describes EPA's data editing procedures and statistical methodology for calculating the proposed effluent limits.

Existing indirect discharging facilities in the Metal Finishing Job Shops Subcategory must achieve the following pretreatment standards.

Table 14-15

PSES for the Metal Finishing Job Shops Subcategory

Regulated Parameter		Maximum Daily (mg/L (ppm))	Maximum Monthly Avg. (mg/L (ppm))
1.	Total Organic Carbon (TOC) (as indicator)	78	59
2.	Total Organics Parameter (TOP)	9.0	4.3
3.	Cadmium	0.21	0.09
4.	Chromium	1.3	0.55
5.	Copper	1.3	0.57
6.	Total Cyanide	0.21	0.13
7.	Amenable Cyanide	0.14	0.07
8.	Lead	0.12	0.09
9.	Manganese	0.25	0.10
10.	Molybdenum	0.79	0.49
11.	Nickel	1.5	0.64
12.	Silver	0.15	0.06
13.	Sulfide, Total	31	13
14.	Tin	1.8	1.4
15.	Zinc	0.35	0.17

As discussed in Section 15.2.7, upon agreement with the permitting authority, facilities with cyanide treatment have the option of achieving the limitation for either total or amenable cyanide. Additionally, upon agreement with the permitting authority, facilities must choose to monitor for TOP or TOC, or implement a management plan for organic chemicals as specified in Section 15.2.7. A POTW has the option of imposing mass-based standards in place of the concentration-based standards. To convert to mass-based standards, multiply each parameter's concentration-based standard by the average daily flow of process wastewater discharged by the source into the POTW.

14.4.4 PSES for the Non-Chromium Anodizing Subcategory

EPA is proposing to not establish PSES for the Non-Chromium Anodizing Subcategory based on the economic impacts associated with Option 2 and the small quantity of toxic pollutants discharged by facilities in this subcategory remaining covered at an economically achievable flow cutoff. EPA determined that 60 percent of the indirect discharging facilities in this subcategory would close as a result of complying with Option 2 based standards. Pretreatment standards for this subcategory based on either Option 2 or Option 4 would require facilities to remove large quantities of aluminum, a metal that is beneficial to POTWs because it assists in the flocculation of wastewater prior to sedimentation. Aluminum anodizers use a large quantity of water in their anodizing processes and produce a wastewater that contains mostly aluminum. If the Agency proposed pretreatment standards for this subcategory, even without regulating aluminum, the standards would require facilities to install very large treatment systems (because of their high flow volume) and would remove large quantities of aluminum in order to remove small quantities of other metals such as nickel, zinc, and manganese. Therefore, EPA determined that the benefits of the aluminum discharge to POTWs outweighed the benefits gained from the removal of small quantities of other metals. In addition, because EPA has already promulgated pretreatment standards for non-chromium anodizers at 40 CFR 413 and 433, there is already a level of control for the small quantities of other metals being discharged along with the aluminum. Facilities subject to this subcategory must still comply with applicable PSES limitations (either 40 CFR 413 or 40 CFR 433). (See 40 CFR 438.40(b).)

14.4.5 PSES for the Printed Wiring Board Subcategory

As discussed above in Section 14.4.1, one of the factors that EPA uses to determine the need for pretreatment standards is whether the pollutants discharged by an industry pass through a POTW. The Agency only applies the pass-through analysis to pollutants that it selected for regulation under BAT. For the Printed Wiring Board Subcategory, EPA determined that nine pollutants pass through; therefore, EPA is proposing pretreatment standards equivalent to BAT for these pollutants. In addition, EPA is proposing a standard for total sulfide based on potential POTW interference or upset associated with discharges of total sulfide from MP&M facilities. EPA is also proposing standards for TOC and TOP as part of a compliance alternative for organic pollutant discharges. (See Section 7 for a more detailed discussion of the pass-through analysis).

As discussed in Section 14.4.1, in the Agency's engineering assessment of the best available technology for pretreatment of wastewater from the Printed Wiring Board Subcategory, EPA considered the same technology options for PSES as it did for BAT with the additional consideration of a flow cutoff exclusion. The Agency selected Option 2 for PSES for many of the same reasons it selected that option for BPT and BAT (see Sections 14.1.4 and 14.3.4) and provides additional rationale below. EPA also determined that pretreatment standards based on Option 2 for all facilities (i.e., no flow exclusion) are appropriate for the Printed Wiring Board Subcategory. The Agency estimates that 621 printed wiring board facilities currently discharge MP&M process wastewater to POTWs. The Agency projects that seven of these facilities (1 percent of the current indirect discharging population) might close as a result of the MP&M regulation. EPA concluded that this level of impact was economically achievable for the subcategory as a whole, but in an effort to minimize the impacts and/or maintain existing limitations for facilities where potential removals may not be sufficient to warrant national regulation, considered flow exemptions and compliance alternatives.

The Agency believes that Option 2 represents the “best available” technology as it achieves a high level of pollutant control, treating all priority pollutants to very low levels, often at or near the analytical minimum level. Approximately 80 percent of the indirect discharging facilities in the Printed Wiring Board Subcategory employ chemical precipitation followed by sedimentation (Option 2), while 2 percent employ microfiltration after chemical precipitation (Option 4).

EPA did evaluate Option 4 as a basis for establishing PSES. EPA estimates that the economic impact due to the additional controls at Option 4 levels would result in 18 more facility closures than Option 2 (total of 25 closures). EPA does consider Option 4 to be economically achievable for this subcategory. However, EPA is not proposing to establish PSES limitations based on Option 4 because it determined that Option 2 achieves nearly equivalent reductions in pound-equivalents for much less cost. By selecting Option 2 as the basis for PSES, EPA reduced annualized compliance costs by $75 million (1996 dollars) while only losing 0.5 percent of the toxic pound-equivalents that would be removed under Option 4. The Agency concluded that the additional costs of Option 4 do not justify the additional insignificant amount of pollutant removals achieved for indirect dischargers in this subcategory. Therefore, EPA determined that Option 2 is the “best available” technology economically achievable for the Printed Wiring Board Subcategory.

Although EPA concluded that the level of economic impact associated with Option 2 with no flow cutoff was economically achievable, it considered flow exclusions in an effort to minimize the impacts and/or maintain existing limitations for facilities where potential removals may not be significant enough to warrant national regulation. EPA did not consider the reduction in POTW burden for this subcategory, unlike the General Metals Subcategory, because EPA has already established PSES for all of the facilities in this subcategory under 40 CFR 413 and 433, and local control authorities would not have to develop entirely new permits (or other control mechanisms) for these facilities. EPA analyzed a 1 MGY flow cutoff, which would exclude 85 facilities, but would not reduce economic impacts. The same seven facilities that

EPA predicted to close with no flow cutoff are also expected to close with a 1 MGY flow cutoff. EPA determined that the proposed regulation would remove a total of less than 500 pound-equivalents from the facilities discharging less than 1 MGY (after removing baseline closures from the analysis), or less than 10 pound-equivalents per facility. The incremental removals beyond current regulations is very small for facilities less than 1 MGY, and therefore EPA will consider the 1 MGY cutoff at final. However, the Agency concluded that the significant pollutant reductions associated with Option 2 were feasible and achievable, the economic impacts were not mitigated at a 1 MGY flow cutoff for this subcategory and POTW burden would not be reduced with a flow cutoff, and thus is not proposing a 1 MGY flow cutoff for this subcategory. Table 14-12 shows the pounds of pollutants removed by the proposed option; Table 14-13 summarizes the costs and economic impacts associated with the proposed option. Table 14-16 lists PSES for the Printed Wiring Board Subcategory. Section 10.0 describes EPA's data editing procedures and statistical methodology for calculating the proposed effluent limits for this subcategory.

Existing indirect discharging facilities in the Printed Wiring Board Subcategory must achieve the following pretreatment standards.

Table 14-16

PSES for the Printed Wiring Board Subcategory

Regulated Parameter		Maximum Daily (mg/L (ppm))	Maximum Monthly Avg. (mg/L (ppm))
1.	Total Organic Carbon (TOC) (as indicator)	101	67
2.	Total Organics Parameter (TOP)	9.0	4.3
3.	Chromium	0.25	0.14
4.	Copper	0.55	0.28
5.	Total Cyanide	0.21	0.13
6.	Amenable Cyanide	0.14	0.07
7.	Lead	0.04	0.03
8.	Manganese	1.3	0.64
9.	Nickel	0.30	0.14
10.	Sulfide, Total	31	13
11.	Tin	0.31	0.14
12.	Zinc	0.38	0.22

As discussed in Section 15.2.7, upon agreement with the permitting authority, facilities with cyanide treatment have the option of achieving the limitation for either total or

amenable cyanide. Upon agreement with the permitting authority, facilities must choose to monitor for TOP or TOC, or implement a management plan for organic chemicals as specified in Section 15.2.7. A POTW has the option of imposing mass-based standards in place of the concentration-based standards. To convert to mass-based standards, multiply each parameter's concentration-based standard by the average daily flow of process wastewater discharged by the source into the POTW.

14.4.6 PSES for the Steel Forming and Finishing Subcategory

As discussed above in Section 14.4, one of the factors that EPA uses to determine the need for pretreatment standards is whether the pollutants discharged by an industry pass through a POTW The Agency only applies the pass-through analysis to pollutants that it selected for regulation under BAT. For the Steel Forming and Finishing Subcategory, EPA determined that 13 pollutants pass through; therefore, EPA is proposing pretreatment standards equivalent to BAT for these pollutants. In addition, EPA is proposing a standard for total sulfide based on potential POTW interference or upset associated with discharges of total sulfide from MP&M facilities. EPA is also proposing standards for TOC and TOP as part of a compliance alternative for organic pollutant discharges. (See Section 7 for a more detailed discussion of the pass-through analysis).

As discussed in Section 14.4.1 above, in the Agency's engineering assessment of the best available technology for pretreatment of wastewater from the Steel Forming and Finishing Subcategory, EPA considered the same technology options for PSES as it did for BAT with the additional consideration of a flow cutoff exclusion. The Agency selected Option 2 for PSES for many of the same reasons it selected that option for BPT and BAT (see Sections 14.1.5 and 14.3.5) and provides additional rationale below. EPA is proposing pretreatment standards based on Option 2 for all facilities (i.e., no flow exclusion) for the Steel Forming and Finishing Subcategory.

The Agency estimates that 110 Steel Forming and Finishing facilities currently discharge MP&M process wastewater to POTWs. The Agency projects that six of these facilities (6 percent of the current indirect discharging population) might close as a result of the MP&M regulation. EPA concluded that this level of impact was economically achievable for the subcategory as a whole, but in an effort to minimize the impacts, considered flow exemptions and compliance alternatives.

The Agency believes that Option 2 represents the "best available" technology as it achieves a high level of pollutant control, treating all priority pollutants to very low levels, often at or near the analytical minimum level. Approximately 63 percent of the indirect discharging facilities in the Steel Forming and Finishing Subcategory employ chemical precipitation followed by sedimentation (Option 2), while no facilities employ microfiltration after chemical precipitation (Option 4).

EPA did evaluate Option 4 as a basis for establishing PSES. EPA estimates that the economic impact due to the additional controls at Option 4 levels would result in the same number of facility closures (six) as Option 2. Therefore, EPA does consider Option 4 to be economically achievable for this subcategory. However, EPA is not proposing to establish PSES limitations based on Option 4 because it determined that Option 2 achieves nearly equivalent reductions in pound-equivalents for much less cost. By selecting Option 2 as the basis for PSES, EPA reduced annualized compliance costs by $12 million (1996 dollars) while only losing 0.6 percent of the toxic pound-equivalents that would be removed under Option 4. The Agency concluded that the additional costs of Option 4 do not justify the additional insignificant pollutant removals achieved for indirect discharging facilities in this subcategory. Therefore, EPA determined that Option 2 is the "best available" technology economically achievable for the Steel Forming and Finishing Subcategory.

Although EPA concluded that the level of economic impact associated with Option 2 with no flow cutoff was economically achievable, it considered flow exclusions in an effort to minimize the impacts. EPA did not consider the reduction in POTW burden for this subcategory, unlike the General Metals subcategory, because EPA has already established PSES for all of the facilities in this subcategory under 40 CFR 420, and local control authorities would not have to develop entirely new permits (or other control mechanisms) for these facilities. However, to mitigate economic impacts (and or maintain existing limitations for facilities where potential removals may not be sufficient to warrant national regulation), EPA analyzed a 1 MGY flow cutoff, which would exclude 21 facilities (after accounting for baseline closures), and a 2 MGY flow cutoff which would exclude 30 facilities. Neither a 1 MGY flow cutoff nor a 2 MGY flow cutoff would reduce economic impacts. The same 6 facilities that EPA predicted to close with no flow cutoff are also expected to close with either a 1 or 2 MGY flow cutoff. However, a 1 MGY flow cutoff would eliminate less than 100 total pound-equivalents that would be removed under the proposed option, or less than 5 pound-pound-equivalents per excluded facility, while a 2 MGY flow cutoff would eliminate less than 200 pound-equivalents total, or less than 7 pound-equivalents per excluded facility. These incremental removals beyond current regulations are very small, and therefore EPA will consider the 1 and 2 MGY cutoffs at final. Although a 3 MGY flow cutoff would reduce projected economic impacts by half (3 projected closures instead of 6), it would eliminate 2,157 pound-equivalent removals, or about 58 pound-equivalents per facility. These incremental removals are nearly twice the removals (on a per facility basis) than would have been realized by regulating Industrial Laundry and Landfill facilities. Because EPA has concluded that the proposed option is feasible and achievable, and POTW burden would not be reduced with a flow cutoff, EPA is not proposing a flow cutoff for the Steel Forming and Finishing Subcategory.

EPA expresses the proposed effluent limitations guidelines and standards for BPT, BAT, NSPS, PSES, and PSNS for the Steel Forming and Finishing Subcategory as mass limitations in pounds/1,000 pounds of product. Permit writers and control authorities shall compute mass effluent limitations and pretreatment requirements for each forming/finishing operation by multiplying the average daily production rate (or other reasonable measure of production) by the respective effluent limitations guidelines or standards listed in Table 14-17.

Production-normalized flows for the Steel Forming and Finishing Subcategory are listed in Table 14-7. Permit writers and control authorities shall not include production from unit operations that do not generate or discharge process wastewater in the calculation of the operating rate. These mass-based limitations apply to the operations listed and defined in Section 14.1.5

Existing indirect discharging facilities in the Steel Forming and Finishing Subcategory must achieve the following pretreatment standards.

Table 14-17

PSES for the Steel Forming and Finishing Subcategory

Pollutant	TSS		O&G (as HEM)	
Forming/Finishing Operation	**Maximum Daily (lbs/1000 lbs of product)**	**Maximum Monthly Avg. (lbs/1000 lbs of product)**	**Maximum Daily (lbs/1000 lbs of product)**	**Maximum Monthly Avg. (lbs/1000 lbs of product)**
(a) Acid Pickling	0.0709	0.0369	0.0312	0.0239
(b) Alkaline Cleaning	0.0709	0.0369	0.0312	0.0239
(c) Cold Forming	0	0	0	0
(d) Continuous Annealing	0.00355	0.00184	0.00156	0.00120
(e) Electroplating	0.142	0.0737	0.0623	0.0478
(f) Hot Dip Coating	0.0206	0.0107	0.00903	0.00693
(g) Lubrication	0.00170	0.000884	0.000748	0.000574
(h) Mechanical Descaling	0.000284	0.000148	0.000125	0.0000956
(i) Painting	0.00922	0.00479	0.00405	0.00311
(j) Pressure Deformation	0.00355	0.00184	0.00156	0.00120

Pollutant	TOC		TOP	
Forming/Finishing Operation	**Maximum Daily (lbs/1000 lbs of product)**	**Maximum Monthly Avg. (lbs/1000 lbs of product)**	**Maximum Daily (lbs/1000 lbs of product)**	**Maximum Monthly Avg. (lbs/1000 lbs of product)**
(a) Acid Pickling	0.181	0.103	0.0188	0.00896
(b) Alkaline Cleaning	0.181	0.103	0.0188	0.00896
(c) Cold Forming	0	0	0	0

Table 14-17 (Continued)

Pollutant	TOC		TOP	
(d) Continuous Annealing	0.00901	0.00514	0.000937	0.000448
(e) Electroplating	0.361	0.206	0.0375	0.0180
(f) Hot Dip Coating	0.0523	0.0300	0.00543	0.00260
(g) Lubrication	0.00433	0.00247	0.000450	0.000215
(h) Mechanical Descaling	0.000721	0.000411	0.0000750	0.0000359
(i) Painting	0.0235	0.0134	0.00244	0.00117
(j) Pressure Deformation	0.00901	0.00514	0.000937	0.000448

Pollutant	Cadmium		Chromium	
Forming/Finishing Operation	**Maximum Daily (lbs/1000 lbs of product)**	**Maximum Monthly Avg. (lbs/1000 lbs of product)**	**Maximum Daily (lbs/1000 lbs of product)**	**Maximum Monthly Avg. (lbs/1000 lbs of product)**
(a) Acid Pickling	0.000292	0.000188	0.000509	0.000277
(b) Alkaline Cleaning	0.000292	0.000188	0.000509	0.000277
(c) Cold Forming	0	0	0	0
(d) Continuous Annealing	0.0000146	0.00000938	0.0000255	0.0000139
(e) Electroplating	0.000583	0.000376	0.00102	0.000553
(f) Hot Dip Coating	0.0000845	0.0000545	0.000148	0.0000801
(g) Lubrication	0.00000699	0.00000450	0.0000123	0.00000663
(h) Mechanical Descaling	0.00000116	0.00000075	0.00000204	0.00000110
(i) Painting	0.0000379	0.0000244	0.0000662	0.0000359
(j) Pressure Deformation	0.0000146	0.00000938	0.0000255	0.0000139

Table 14-17 (Continued)

Pollutant	Copper		Lead	
Forming/Finishing Operation	**Maximum Daily (lbs/1000 lbs of product)**	**Maximum Monthly Avg. (lbs/1000 lbs of product)**	**Maximum Daily (lbs/1000 lbs of product)**	**Maximum Monthly Avg. (lbs/1000 lbs of product)**
(a) Acid Pickling	0.00114	0.000565	0.0000737	0.0000522
(b) Alkaline Cleaning	0.00114	0.000565	0.0000737	0.0000522
(c) Cold Forming	0	0	0	0
(d) Continuous Annealing	0.0000570	0.0000283	0.00000368	0.00000261
(e) Electroplating	0.00228	0.00113	0.000148	0.000105
(f) Hot Dip Coating	0.000331	0.000164	0.0000214	0.0000152
(g) Lubrication	0.0000274	0.0000136	0.00000177	0.00000125
(h) Mechanical Descaling	0.00000455	0.00000226	0.00000029	0.00000021
(i) Painting	0.000148	0.0000734	0.00000957	0.00000678
(j) Pressure Deformation	0.0000570	0.0000283	0.00000368	0.00000261

Pollutant	Manganese		Molybdenum	
Forming/Finishing Operation	**Maximum Daily (lbs/1000 lbs of product)**	**Maximum Monthly Avg. (lbs/1000 lbs of product)**	**Maximum Daily (lbs/1000 lbs of product)**	**Maximum Monthly Avg. (lbs/1000 lbs of product)**
(a) Acid Pickling	0.000269	0.000183	0.00164	0.00103
(b) Alkaline Cleaning	0.000269	0.000183	0.00164	0.00103
(c) Cold Forming	0	0	0	0
(d) Continuous Annealing	0.0000135	0.00000914	0.0000820	0.0000511
(e) Electroplating	0.000537	0.000366	0.00328	0.00205
(f) Hot Dip Coating	0.0000779	0.0000531	0.000476	0.000297
(g) Lubrication	0.00000644	0.00000439	0.0000394	0.0000246
(h) Mechanical Descaling	0.00000107	0.00000073	0.00000656	0.00000409
(i) Painting	0.0000350	0.0000238	0.000214	0.000133

Table 14-17 (Continued)

Pollutant	Manganese		Molybdenum	
(j) Pressure Deformation	0.0000135	0.00000914	0.0000820	0.0000511

Pollutant	Nickel		Silver	
Forming/Finishing Operation	**Maximum Daily (lbs/1000 lbs of product)**	**Maximum Monthly Avg. (lbs/1000 lbs of product)**	**Maximum Daily (lbs/1000 lbs of product)**	**Maximum Monthly Avg. (lbs/1000 lbs of product)**
(a) Acid Pickling	0.00104	0.000642	0.000456	0.000187
(b) Alkaline Cleaning	0.00104	0.000642	0.000456	0.000187
(c) Cold Forming	0	0	0	0
(d) Continuous Annealing	0.0000520	0.0000321	0.0000228	0.00000934
(e) Electroplating	0.00208	0.00129	0.000912	0.000374
(f) Hot Dip Coating	0.000302	0.000186	0.000133	0.0000542
(g) Lubrication	0.0000250	0.0000154	0.0000110	0.00000448
(h) Mechanical Descaling	0.00000415	0.00000257	0.00000182	0.00000075
(i) Painting	0.000135	0.0000834	0.0000593	0.0000243
(j) Pressure Deformation	0.0000520	0.0000321	0.0000228	0.00000934

Pollutant	Sulfide (as S)		Tin	
Forming/Finishing Operation	**Maximum Daily (lbs/1000 lbs of product)**	**Maximum Monthly Avg. (lbs/1000 lbs of product)**	**Maximum Daily (lbs/1000 lbs of product)**	**Maximum Monthly Avg. (lbs/1000 lbs of product)**
(a) Acid Pickling	0.0630	0.0267	0.00274	0.00139
(b) Alkaline Cleaning	0.0630	0.0267	0.00274	0.00139
(c) Cold Forming	0	0	0	0
(d) Continuous Annealing	0.00315	0.00134	0.000137	0.0000694
(e) Electroplating	0.126	0.0534	0.00547	0.00278
(f) Hot Dip Coating	0.0183	0.00774	0.000793	0.000403

Table 14-17 (Continued)

(g) Lubrication	0.00151	0.000641	0.0000656	0.0000333
(h) Mechanical Descaling	0.000252	0.000107	0.0000110	0.00000555
(i) Painting	0.00818	0.00347	0.000356	0.000181
(j) Pressure Deformation	0.00315	0.00134	0.000137	0.0000694

Pollutant	**Zinc**	
Forming/Finishing Operation	**Maximum Daily (lbs/1000 lbs of product)**	**Maximum Monthly Avg. (lbs/1000 lbs of product)**
(a) Acid Pickling	0.000793	0.000456
(b) Alkaline Cleaning	0.000793	0.000456
(c) Cold Forming	0	0
(d) Continuous Annealing	0.0000397	0.0000228
(e) Electroplating	0.00159	0.000912
(f) Hot Dip Coating	0.000230	0.000133
(g) Lubrication	0.0000191	0.0000110
(h) Mechanical Descaling	0.00000317	0.00000182
(i) Painting	0.000103	0.0000593
(j) Pressure Deformation	0.0000397	0.0000228

Pollutant	**Cyanide (T)**		**Cyanide (A)**	
Forming/Finishing Operation	**Maximum Daily (lbs/1000 lbs of product)**	**Maximum Monthly Avg. (lbs/1000 lbs of product)**	**Maximum Daily (lbs/1000 lbs of product)**	**Maximum Monthly Avg. (lbs/1000 lbs of product)**
(a) Electroplating	0.000865	0.000513	0.000580	0.000282

As discussed Section 15.2.7, upon agreement with the permitting authority, facilities with cyanide treatment have the option of achieving the limitation for either amenable or total cyanide. Upon agreement with the permitting authority, facilities must choose to monitor for TOP or TOC, or implement a management plan for organic chemicals as specified in Section 15.2.7.

14.4.7 PSES for the Oily Wastes Subcategory

As discussed in Section 14.4, two of the factors that EPA uses to determine the need for pretreatment standards is whether the pollutants discharged by an industry pass through or interfere with a POTW. For the Oily Wastes Subcategory, EPA is proposing pretreatment standards equivalent to BAT for the following three pollutants or pollutant parameters: TOC, TOP and total sulfide. In addition, EPA is proposing a standard for total sulfide based on potential POTW interference or upset associated with discharges of total sulfide from MP&M facilities. EPA is also proposing standards for TOC and TOP as part of a compliance alternative for organic pollutant discharges. (See Section 7 for a more detailed discussion of the pass-through analysis).

As discussed in Section 14.4.1, in the Agency's engineering assessment of the best available technology for pretreatment of wastewater from the Oily Wastes Subcategory, EPA considered the same technology options for PSES as it did for BAT with the additional consideration of a flow cutoff exclusion. The Agency selected BAT Option 6 with a 2 MGY flow cutoff for PSES. The Agency selected Option 6 for PSES for many of the same reasons it selected that option for BPT and BAT (See Sections 14.1.6 and 14.3.6) and provides additional rationale below. EPA is proposing the 2 MGY flow cutoff primarily to reduce the burden on POTWs. In the proposal EPA solicits comments on a 3 MGY cutoff as a possible alternative to further reduce impacts.

EPA determined that Option 6 represented the best available technology and that Option 6 with a 2 MGY flow cutoff was economically achievable and greatly reduced the burden on POTWs. This option results in 14 facility closures (less than 1 percent of the indirect discharging Oily Wastes Subcategory population). Additionally, the Agency believes that Option 6 represents the “best available” technology as it achieves a high level of pollutant control, treating all priority pollutants to very low levels, often at or near the analytical minimum level. According to EPA’s detailed questionnaires, approximately 44 percent of the indirect discharging facilities in the Oily Wastes Subcategory employ oil/water separation by chemical emulsion breaking followed by gravity separation and oil skimming (Option 6), while no facilities employ ultrafiltration (Option 8).

EPA did evaluate BPT Option 8 with a 2 MGY flow cutoff as a basis for establishing PSES more stringent than the BAT level of control being proposed today. EPA estimates that the economic impact due to the additional controls at Option 8 levels would result in the same number of facility closures (14) as Option 6. Therefore, EPA does consider Option 8 to be economically achievable for this subcategory. However, based on the available data base, EPA is not proposing to establish PSES limitations based on Option 8 because it removes fewer pound-equivalents than Option 6. Therefore, the Agency determined that Option 6 is the “best available” technology economically achievable for the removal of priority pollutants from wastewater generated at Oily Wastes Subcategory facilities.

Considering the large number of indirect dischargers that have the potential to be covered by this proposed regulation, an important issue to the affected industry and to permit writers is the potentially enormous administrative burden associated with issuing permits or other control mechanisms for all of these facilities. Therefore, in developing this proposal, EPA looked for means of reducing the administrative burden, monitoring requirements, and reporting requirements. To meet this end, the Agency is proposing a 2 MGY flow cutoff for the Oily Wastes Subcategory. Under this proposed option, facilities in the Oily Wastes Subcategory that discharge greater than 2 MGY per year of MP&M process wastewater would be subject to the proposed pretreatment standards. However, those facilities in the Oily Wastes Subcategory that discharge 2 MGY or less would not be subject to MP&M PSES requirements. These facilities would, however, remain subject to the existing general pretreatment standards at 40 CFR Part 403.

The Agency is proposing the 2 MGY flow cutoff exclusion for the Oily Wastes Subcategory based on several factors. First, and the most important factor, is the overall size of the subcategory. EPA estimates that there are approximately 28,500 indirect discharging facilities in the Oily Wastes Subcategory, of which over 99 percent are not currently regulated by categorical pretreatment standards. Establishing an MP&M pretreatment standard for all 28,500 facilities would nearly double the number of permits that local authorities are currently responsible for. EPA concluded that this increased permit burden was not reasonable given the projected loadings reductions and therefore explored potential flow cutoffs as a way to reduce the impact on POTW permitting authorities.

Second, EPA is proposing the 2 MGY flow cutoff for this subcategory based in part on the small number of pound-equivalents that would be removed by facilities with annual wastewater flows less than or equal to 2 MGY. EPA determined that after removing facilities that close in the baseline ("baseline closures") from the analysis, over 99 percent of the indirect discharging facilities in the Oily Wastes Subcategory discharge less than or equal to 2 MGY. EPA estimates average removals of only 2 pound-equivalents per facility per year for these facilities.

In addition, EPA determined that for those facilities in this subcategory that discharge between 1 and 2 MGY the MP&M regulation would remove an average of 31 pound-equivalents per year per facility. These reductions, as discussed previously, are lower than those projected for industrial laundries and landfills, for which EPA determined national regulation was not warranted. The Agency concluded that regulation of facilities discharging only 2 pound-equivalents per year (with those discharging between 1 and 2 MGY at 31 pound-equivalents per year) was not justified by the additional permitting burden associated with these facilities. EPA believes this approach would allow Control Authorities to focus their efforts on the facilities discharging the vast majority of the pollutants, rather than dissipating their limited resources on sites contributing much less to the overall problem. EPA does note, however, that the indirect discharging facilities that discharge less than or equal to 2 MGY are responsible for an estimated 78 percent of the total pound-equivalents currently discharged (approximately 51,000 of the 65,000 pound-equivalents discharged after removing baseline closures from the analysis).

EPA also closely evaluated Option 6 with a 3 MGY flow cutoff for the Oily Waste Subcategory. Based on EPA's data collection efforts, after removing facilities that close in the baseline ("baseline closures") from the analysis, over 99 percent of the indirect discharging facilities in the Oily Wastes Subcategory discharge less than or equal to 3 MGY. The Agency determined that after removing baseline closures from the analysis there are approximately 64 indirect discharge facilities in this subcategory between 2 and 3 MGY and that they discharge an average of 24 pound-equivalents per year per facility. If EPA proposed Option 2 with a 3 MGY flow cutoff, the economic impacts would decrease slightly (12 facility closures rather than 14 at the proposed option). The Agency concluded that the 3 MGY flow cutoff was not necessary to reduce POTW burden for the Oily Wastes Subcategory although it would reduce the economic impact somewhat. EPA notes that these approximately 28,160 facilities are responsible for an estimated 81 percent of the total pound-equivalents currently discharged (approximately 52,500 of the 65,000 pound-equivalents discharged after removing baseline closures from the analysis).

Therefore, EPA is proposing the 2 MGY flow cutoff but is also seriously considering a 3 MGY cutoff. EPA believes this approach would allow control authorities to focus their efforts on the facilities discharging the vast majority of the pollutants, rather than dissipating their limited resources on sites contributing much less to the overall problem. Table 14-12 shows the pounds of pollutants removed by the proposed option; Table 14-13 summarizes the costs and economic impacts associated with the proposed option. (Both tables include facilities that close in the baseline). EPA's methodology for identifying baseline closures is discussed in the EEBA.

Except at facilities where the process wastewater introduced into a POTW does not exceed 2 MGY, existing indirect discharging facilities in the Oily Wastes Subcategory must achieve the following pretreatment standards.

Table 14-18

PSES for the Oily Wastes Subcategory

Regulated Parameter		Maximum Daily (mg/L (ppm))	Maximum Monthly Avg. (mg/L (ppm))
1.	Total Organic Carbon (TOC) (as indicator)	633	378
2.	Total Organics Parameter (TOP)	9.0	4.3
3.	Sulfide, Total	31	13

Upon agreement with the permitting authority, facilities must choose to monitor for TOP or TOC, or implement a management plan for organic chemicals as specified in Section 15.2.7. A POTW has the option of imposing mass-based standards in place of the concentration-

based standards. To convert to mass-based standards, multiply each parameter's concentration-based standard by the average daily flow of process wastewater discharged by the source into the POTW.

14.4.8 PSES for the Railroad Line Maintenance Subcategory

EPA is proposing not to establish PSES for the Railroad Line Maintenance Subcategory based on the small quantity of toxic pollutants discharged by facilities in this subcategory. The Agency estimates that there are 799 indirect discharging railroad line maintenance facilities that currently discharge 1,800 pound-equivalents per year to the nation's waters (taking into account removals at the POTW), or just over 2 pound-equivalents per facility per year. Based on this analysis, EPA preliminarily concluded that there is no need to develop nationally applicable regulations for this subcategory due to the low levels of pollutants discharged by facilities in this subcategory.

14.4.9 PSES for the Shipbuilding Dry Dock Subcategory

EPA is proposing not to establish PSES for the Shipbuilding Dry Dock Subcategory based on the small number of facilities in this subcategory and on the small quantity of toxic pollutants removed by the technology options evaluated by EPA for this proposal. The Agency estimates that there are six indirect discharging facilities that have one or more dry docks that currently discharge 852 pound-equivalents per year to the nation's waters (taking into account removals at the POTW). On a national basis, Option 8 (ultrafiltration + P2) removed less than 1 pound-equivalent per year, while Option 10 (DAF plus P2) removed only 26 pound-equivalents per year (or less than 5 pound-equivalents removed per facility per year). The Agency estimates that all of these facilities currently have DAF treatment in place. EPA determined that nationally applicable regulations are unnecessary at this time because of the small number of facilities in this subcategory and based on the small amount of toxic pounds removed by the technology options evaluated by the Agency. EPA believes that pretreatment local limits implemented on a case-by-case basis can more appropriately address any individual toxic parameters present at these six facilities.

14.5 New Source Performance Standards (NSPS)

New facilities have the opportunity to incorporate the best available demonstrated technologies including process changes, in-plant controls, and end-of-pipe treatment technologies. The same technologies discussed previously for BAT and PSES are available as the basis for NSPS. Since new sites have the potential to install pollution prevention and pollution control technologies more cost effectively then existing sources, EPA strongly considered the more advanced treatment options for NSPS. The Agency discusses its analysis of these more stringent options for NSPS on a subcategory-by-subcategory basis below.

14.5.1 NSPS for the General Metals Subcategory

EPA expects that new facilities in the General Metals Subcategory will discharge similar quantities of the same pollutants that existing sources discharge. Therefore, the need for NSPS regulation is the same as the need for BPT regulation. (See Section 14.1.1.)

EPA proposes NSPS for this subcategory based on BAT Option 4. The Agency determined that Option 4 is the best available demonstrated technology for the removal of pollutants in this subcategory. EPA's analytical data shows that Option 4 is capable of achieving much lower long-term averages than Option 2 for several of the metal pollutants of concern. In addition, EPA's data shows that microfiltration greatly reduces the variability in the concentration of the metal pollutants in the treatment effluent. Although Option 4 costs $54,500 (1996 dollars) more than Option 2 annually for a new facility with a wastewater flow of 1.1 MGY (the wastewater flow for a representative direct discharging facility in the General Metals Subcategory), EPA is proposing Option 4 because of the lower levels of metal pollutants in the wastewater effluent. EPA noted in the discussion of its consideration of this technology for BPT/BAT that it is not being proposed for BPT because the additional removals, while large when considered across the entire population of existing facilities, were not significant on a per facility basis, and because of concerns with potential increased loadings (relative to Option 2) of COD and organic pollutants.

The Agency also strongly considered proposing NSPS based on ultrafiltration for oil and grease removal and chemical precipitation followed by sedimentation for TSS and metals removal. This option is equivalent to BAT Option 2 with the oil/water separator replaced by an ultrafilter. Section 10.0 describes EPA's data editing procedures and statistical methodology for calculating the proposed NSPS limitations for this subcategory.

The Agency also performed an economic analysis to determine if Option 4 presented a barrier to entry for new facilities in the General Metals Subcategory. EPA determined that the cost of compliance with NSPS based on Option 4 would make up only 0.04 percent of a new facility's projected revenues. Therefore, EPA concluded that NSPS based on Option 4 would not create a barrier to entry.

New direct discharging facilities in the General Metals Subcategory must achieve must following performance standards. Discharges must remain within the pH range 6 to 9 and must not exceed the following.

Table 14-19

NSPS for the General Metals Subcategory

Regulated Parameter		Maximum Daily (mg/L (ppm))	Maximum Monthly Avg. (mg/L (ppm))
1.	Total Suspended Solids (TSS)	28	18
2.	Oil and Grease (as HEM)	15	12
3.	Total Organic Carbon (TOC) (as indicator)	87	50
4.	Total Organics Parameter (TOP)	9.0	4.3
5.	Cadmium	0.02	0.01
6.	Chromium	0.17	0.07
7.	Copper	0.44	0.16
8.	Total Cyanide	0.21	0.13
9.	Amenable Cyanide	0.14	0.07
10.	Lead	0.04	0.03
11.	Manganese	0.29	0.18
12.	Molybdenum	0.79	0.49
13.	Nickel	1.9	0.75
14.	Silver	0.05	0.03
15.	Sulfide, Total	31	13
16.	Tin	0.03	0.03
17.	Zinc	0.08	0.06

As discussed in Section 15.2.7, upon agreement with the permitting authority, facilities with cyanide treatment have the option of achieving the limitation for either total or amenable cyanide. Upon agreement with the permitting authority, facilities must choose to monitor for TOP or TOC, or implement a management plan for organic chemicals as specified in Section 15.2.7.

14.5.2 NSPS for the Metal Finishing Job Shops Subcategory

EPA expects that new facilities in the Metal Finishing Job Shops Subcategory will discharge similar quantities of the same pollutants that existing sources discharge. Therefore, the need for NSPS regulation is the same as the need for BPT regulation. (See Section 14.1.2.)

EPA is proposing NSPS for this subcategory based on BAT Option 4. The Agency determined that Option 4 is the best available demonstrated technology for the removal of pollutants in this subcategory. EPA's analytical data shows that Option 4 is capable of achieving much lower long-term averages than Option 2 for several of the metal pollutants of concern. In addition, EPA's data shows that microfiltration greatly reduces the variability in the

concentration of the metal pollutants in the treatment effluent. Although Option 4 costs $72,500 (1996 dollars) more than Option 2 annually for a new facility with a wastewater flow of 6.0 MGY (the wastewater flow for a representative direct discharging facility in the Metal Finishing Job Shops Subcategory), EPA is proposing Option 4 because of the lower levels of metal pollutants in the treated wastewater effluent. EPA is not proposing Option 4 for BPT for this subcategory because of the lack of significant overall pollutant removals achieved, and the fact that it removes less COD, oil and grease, and organic pollutants.

The Agency also strongly considered proposing NSPS based on ultrafiltration for oil and grease removal and chemical precipitation followed by sedimentation for TSS and metals removal. This option is equivalent to BAT Option 2 with the oil/water separator replaced by an ultrafilter. Section 10.0 describes EPA's data editing procedures and statistical methodology for calculating the proposed NSPS limitations.

The Agency also performed an economic analysis in order to determine if Option 4 presented a barrier to entry for new facilities in the Metal Finishing Subcategory. EPA determined that the cost of compliance with NSPS based on Option 4 would make up only 1.41 percent of a new facility's projected revenues. Therefore, EPA concluded that NSPS based on Option 4 would not create a barrier to entry.

New direct discharging facilities in the Metal Finishing Job Shops Subcategory must achieve the following performance standards. Discharges must remain within the pH range 6 to 9 and must not exceed the following.

Table 14-20

NSPS for the Metal Finishing Job Shops Subcategory

Regulated Parameter		Maximum Daily (mg/L (ppm))	Maximum Monthly Avg. (mg/L (ppm))
1.	Total Suspended Solids (TSS)	28	18
2.	Oil and Grease (as HEM)	15	12
3.	Total Organic Carbon (TOC) (as indicator)	78	59
4.	Total Organics Parameter (TOP)	9.0	4.3
5.	Cadmium	0.02	0.01
6.	Chromium	0.17	0.07
7.	Copper	0.44	0.16
8.	Total Cyanide	0.21	0.13
9.	Amenable Cyanide	0.14	0.07
10.	Lead	0.04	0.03
11.	Manganese	0.29	0.18
12.	Molybdenum	0.79	0.49
13.	Nickel	1.9	0.75
14.	Silver	0.05	0.03
15.	Sulfide, Total	31	13
16.	Tin	0.03	0.03
17.	Zinc	0.08	0.06

As discussed in Section 15.2.7, upon agreement with the permitting authority, facilities with cyanide treatment have the option of achieving the limitation for either amenable or total cyanide. Upon agreement with the permitting authority, facilities must choose to monitor for TOP or TOC, or implement a management plan for organic chemicals as specified in Section 15.2.7.

14.5.3 NSPS for the Non-Chromium Anodizing Subcategory

EPA expects that new facilities in the Non-Chromium Anodizing Subcategory will discharge similar quantities of the same pollutants that existing sources discharge. EPA notes that it did not identify any existing direct dischargers in this subcategory and that estimates of costs and pollutant loadings were transferred from the best performing indirect dischargers in this subcategory. Therefore, the need for NSPS regulation is the same as the need for BPT regulation. (See Section 14.1.3.).

EPA is proposing NSPS for this subcategory based on BAT Option 2. As discussed in the BPT analysis for this subcategory, non-chromium anodizers discharge large quantities of aluminum but have very low levels of other metals in their wastewater. EPA determined that Option 2 is capable of removing most of the aluminum discharged by facilities in this subcategory and that any additional removals achieved by Option 4 are not justified by the additional cost.

The Agency also evaluated not proposing NSPS for facilities in this subcategory and instead continuing to require compliance with NSPS limitations established under 40 CFR Part 433. However, the Agency has tentatively rejected this option because these new proposed NSPS limitations require an increased removal of TSS, and the Agency feels that the pollutants proposed for regulation here are more appropriate for the non-chromium anodizing industry. The NSPS limitations established in 40 CFR Part 433 require facilities to meet an average monthly discharge of 31 mg/L of TSS and allow for a maximum daily discharge of 60 mg/L. These proposed new source MP&M limitations require non-chromium anodizers to meet an average monthly discharge for TSS of 22 mg/L and allow for a monthly maximum discharge of 52 mg/L. EPA believes that the costs associated with NSPS are justified by the additional removal of TSS from this subcategory. In addition, 40 CFR Part 433 requires non-chromium anodizers to meet effluent limitations for seven metal pollutants. EPA's data show that these seven metals are present only in very small quantities at non-chromium anodizing facilities. In 40 CFR Part 433, EPA did not establish a limit for aluminum, the metal found in the largest quantity in non-chromium anodizers' wastewater. The Agency has determined that direct discharging facilities in the Non-Chromium Anodizing Subcategory should have a limit for aluminum and thus is proposing to cover them here. The Agency notes that this will reduce the number of pollutants that non-chromium anodizers would have to monitor for.

A barrier-to-entry analysis is typically performed for new facilities by using existing facilities as a model. However, there are no existing direct dischargers in this subcategory. Therefore, the Agency could not perform an economic analysis to determine if Option 2 presented a barrier to entry for new facilities in the Non-Chromium Anodizing Subcategory.

New direct discharging facilities in the Non-Chromium Anodizing Subcategory must achieve the following performance standards. Discharges must remain within the pH range of 6 to 9 and must not exceed the following.

Table 14-21

NSPS for the Non-Chromium Anodizing Subcategory

	Regulated Parameter	Maximum Daily (mg/L (ppm))	Maximum Monthly Avg. (mg/L (ppm))
1.	TSS	52	22
2.	O&G (as HEM)	15	12
3.	Aluminum	8.2	4.0
4.	Manganese	0.13	0.09
5.	Nickel	0.50	0.31
6.	Zinc	0.38	0.22

14.5.4 NSPS for the Printed Wiring Board Subcategory

EPA expects that new facilities in the Printed Wiring Board Subcategory will discharge similar quantities of the same pollutants that existing sources discharge. Therefore, the need for NSPS regulation is the same as the need for BPT regulation. (See Section 14.1.4).

EPA is proposing NSPS for this subcategory based on BAT Option 4. The Agency determined that Option 4 is the best available demonstrated technology for the removal of pollutants in this subcategory. EPA's analytical data shows that Option 4 is capable of achieving much lower long-term averages than Option 2 for several of the metal pollutants of concern. In addition, EPA's data shows that microfiltration greatly reduces the variability in the concentration of the metal pollutants in the treatment effluent. Although Option 4 costs $162,000 more than Option 2 annually for a new facility with a wastewater flow of 25.5 MGY (the wastewater flow for a representative direct discharging facility in the Printed Wiring Board Subcategory), EPA is proposing Option 4 because of the lower levels of metal pollutants in the wastewater effluent. EPA is not proposing Option 4 for BPT/BAT because of the lack of significant overall additional removals and the fact that it removes less COD, oil and grease, and organic pollutants, relative to Option 2.

The Agency also strongly considered proposing NSPS based on ultrafiltration for oil and grease removal and chemical precipitation followed by sedimentation for TSS and metals removal. This option is equivalent to BAT Option 2 with the oil/water separator replaced by an ultrafilter.

The Agency also performed an economic analysis to determine if Option 4 presented a barrier to entry for new facilities in the Printed Wiring Board Subcategory. EPA determined that the cost of compliance with NSPS based on Option 4 would make up only 0.02 percent of a new facility's projected revenues. Therefore, EPA concluded that NSPS based on Option 4 would not create a barrier to entry.

Section 10.0 describes EPA's data editing procedures and statistical methodology for calculating the proposed NSPS limitations for this subcategory. Table 14-22 lists the proposed NSPS effluent limitations for the Printed Wiring Board Subcategory.

New direct discharging facilities in the Printed Wiring Board Subcategory must achieve the following performance standards. Discharges must remain within the pH range 6 to 9 and must not exceed the following.

Table 14-22

NSPS for the Printed Wiring Board Subcategory

Regulated Parameter		Maximum Daily (mg/L (ppm))	Maximum Monthly Avg. (mg/L (ppm))
1.	Total Suspended Solids (TSS)	28	18
2.	Oil and Grease (as HEM)	15	12
3.	Total Organic Carbon (TOC) (as indicator)	101	67
4.	Total Organics Parameter (TOP)	9.09.0	4.34.3
5.	Chromium	0.17	0.07
6.	Copper	0.01	0.01
7.	Total Cyanide	0.21	0.13
8.	Amenable Cyanide	0.14	0.07
9.	Lead	0.04	0.03
10.	Manganese	0.29	0.18
11.	Nickel	1.9	0.75
12.	Sulfide, Total	31	13
13.	Tin	0.09	0.07
14.	Zinc	0.08	0.06

As discussed in Section 15.2.7, upon agreement with the permitting authority, facilities with cyanide treatment have the option of achieving the limitation for either amenable or total cyanide. Also upon agreement with the permitting authority, facilities must choose to monitor for TOP or TOC, or implement a management plan for organic chemicals as specified in Section 15.2.765.

14.5.5 NSPS for the Steel Forming and Finishing Subcategory

EPA expects that new facilities in the Steel Forming and Finishing Subcategory will discharge similar quantities of the same pollutants that existing sources discharge.

Therefore, the need for NSPS regulation is the same as the need for BPT regulation. (See Section 14.1.5.)

EPA is proposing NSPS for this subcategory based on BAT Option 4. The Agency determined that Option 4 is the best available demonstrated technology for the removal of pollutants in this subcategory. EPA's analytical data shows that Option 4 is capable of achieving much lower long-term averages than Option 2 for several of the metal pollutants of concern. In addition, EPA's data shows that microfiltration greatly reduces the variability in the concentration of the metal pollutants in the treatment effluent. Although Option 4 costs $42,400 more than Option 2 annually for a new facility with a wastewater flow of 18.4 MGY (the wastewater flow for a representative direct discharging facilities in the Steel Forming and Finishing Subcategory), EPA determined that the additional cost of Option 4 is justified by the lower levels of metal pollutants in the wastewater effluent.

The Agency also strongly considered proposing NSPS based on ultrafiltration for oil and grease removal and chemical precipitation followed by a clarifier for TSS and metals removal. This option is equivalent to BAT Option 2 with the oil/water separator replaced by an ultrafilter.

The Agency also performed an economic analysis to determine if Option 4 presented a barrier to entry for new facilities in the Steel Forming and Finishing Subcategory. EPA determined that the cost of compliance with NSPS based on Option 4 would make up only 0.14 percent of a new facility's projected revenues. Therefore, EPA concluded that NSPS based on Option 4 would not create a barrier to entry.

Section 10.0 describes EPA's data editing procedures and statistical methodology for calculating the proposed NSPS limitations for this subcategory. Table 14-23 lists the proposed NSPS effluent limitations for the Steel Forming and Finishing Subcategory.

EPA expresses the proposed effluent limitations guidelines and standards for BPT, BAT, NSPS, PSES, and PSNS for the Steel Forming and Finishing Subcategory as mass limitations in pounds/1,000 pounds of product. Permit writers and control authorities shall compute mass effluent limitations and pretreatment requirements for each forming/finishing operation by multiplying the average daily production rate (or other reasonable measure of production) by the respective effluent limitations guidelines or standards listed in Table 14-23. Production-normalized flows for the Steel Forming and Finishing Subcategory are listed in Table 14-7. Permit writers and control authorities shall not include production from unit operations that do not generate or discharge process wastewater in the calculation of the operating rate. These mass-based limitations apply to the operations listed and defined in Section 14.1.5

New direct discharging facilities in the Steel Forming and Finishing Subcategory must achieve the following performance standards. Discharges must remain within the pH range 6 to 9 and must not exceed the following.

Table 14-23

NSPS for the Steel Forming and Finishing Subcategory

Pollutant	TSS		O&G (as HEM)	
Forming/Finishing Operation	**Maximum Daily (lbs/1000 lbs of product)**	**Maximum Monthly Avg. (lbs/1000 lbs of product)**	**Maximum Daily (lbs/1000 lbs of product)**	**Maximum Monthly Avg. (lbs/1000 lbs of product)**
(a) Acid Pickling	0.0571	0.0358	0.0312	0.0239
(b) Alkaline Cleaning	0.0571	0.0358	0.0312	0.0239
(c) Cold Forming	0	0	0	0
(d) Continuous Annealing	0.00286	0.00179	0.00156	0.00120
(e) Electroplating	0.115	0.0716	0.0623	0.00478
(f) Hot Dip Coating	0.0166	0.0104	0.00903	0.00693
(g) Lubrication	0.00137	0.000859	0.000748	0.000574
(h) Mechanical Descaling	0.000229	0.000144	0.000125	0.0000956
(i) Painting	0.00743	0.00466	0.00405	0.00311
(j) Pressure Deformation	0.00286	0.00179	0.00156	0.00120

Pollutant	TOC		TOP	
Forming/Finishing Operation	**Maximum Daily (lbs/1000 lbs of product)**	**Maximum Monthly Avg. (lbs/1000 lbs of product)**	**Maximum Daily (lbs/1000 lbs of product)**	**Maximum Monthly Avg. (lbs/1000 lbs of product)**
(a) Acid Pickling	0.181	0.103	0.0188	0.00896
(b) Alkaline Cleaning	0.181	0.103	0.0188	0.00896
(c) Cold Forming	0	0	0	0
(d) Continuous Annealing	0.00901	0.00514	0.000937	0.000448
(e) Electroplating	0.361	0.206	0.0375	0.0180
(f) Hot Dip Coating	0.0523	0.0298	0.00543	0.00260
(g) Lubrication	0.00433	0.00247	0.000450	0.000215
(h) Mechanical Descaling	0.000721	0.000411	0.0000750	0.0000359
(i) Painting	0.0235	0.0134	0.00244	0.00117

Table 14-23 (Continued)

(j) Pressure Deformation	0.00901	0.00514	0.000937	0.000448

Pollutant	Cadmium		Chromium	
Forming/Finishing Operation	**Maximum Daily (lbs/1000 lbs of product)**	**Maximum Monthly Avg. (lbs/1000 lbs of product)**	**Maximum Daily (lbs/1000 lbs of product)**	**Maximum Monthly Avg. (lbs/1000 lbs of product)**
(a) Acid Pickling	0.0000267	0.0000184	0.000355	0.000143
(b) Alkaline Cleaning	0.0000267	0.0000184	0.000355	0.000143
(c) Cold Forming	0	0	0	0
(d) Continuous Annealing	0.00000133	0.00000092	0.0000178	0.00000714
(e) Electroplating	0.0000534	0.0000368	0.000710	0.000286
(f) Hot Dip Coating	0.00000773	0.00000533	0.000103	0.0000415
(g) Lubrication	0.00000064	0.00000044	0.00000851	0.00000343
(h) Mechanical Descaling	0.00000011	0.00000007	0.00000142	0.00000057
(i) Painting	0.00000347	0.00000239	0.0000461	0.0000186
(j) Pressure Deformation	0.00000133	0.00000092	0.0000178	0.00000714

Pollutant	Copper		Lead	
Forming/Finishing Operation	**Maximum Daily (lbs/1000 lbs of product)**	**Maximum Monthly Avg. (lbs/1000 lbs of product)**	**Maximum Daily (lbs/1000 lbs of product)**	**Maximum Monthly Avg. (lbs/1000 lbs of product)**
(a) Acid Pickling	0.000898	0.000327	0.0000692	0.0000517
(b) Alkaline Cleaning	0.000898	0.000327	0.0000692	0.0000517
(c) Cold Forming	0	0	0	0
(d) Continuous Annealing	0.0000449	0.0000164	0.00000346	0.00000258
(e) Electroplating	0.00180	0.000654	0.000139	0.000104
(f) Hot Dip Coating	0.000261	0.0000949	0.0000201	0.0000150
(g) Lubrication	0.0000216	0.00000785	0.00000166	0.00000124

Table 14-23 (Continued)

(h) Mechanical Descaling	0.00000359	0.00000131	0.00000028	0.00000021
(i) Painting	0.000117	0.0000425	0.00000899	0.00000671
(j) Pressure Deformation	0.0000449	0.0000164	0.00000346	0.00000258

Pollutant	**Manganese**		**Molybdenum**	
Forming/Finishing Operation	**Maximum Daily (lbs/1000 lbs of product)**	**Maximum Monthly Avg. (lbs/1000 lbs of product)**	**Maximum Daily (lbs/1000 lbs of product)**	**Maximum Monthly Avg. (lbs/1000 lbs of product)**
(a) Acid Pickling	0.000600	0.000364	0.00164	0.00103
(b) Alkaline Cleaning	0.000600	0.000364	0.00164	0.00103
(c) Cold Forming	0	0	0	0
(d) Continuous Annealing	0.0000300	0.0000182	0.0000820	0.0000511
(e) Electroplating	0.00120	0.000728	0.00328	0.00205
(f) Hot Dip Coating	0.000174	0.000106	0.000476	0.000297
(g) Lubrication	0.0000144	0.00000873	0.0000394	0.0000246
(h) Mechanical Descaling	0.00000240	0.00000146	0.00000656	0.00000409
(i) Painting	0.0000780	0.0000473	0.000214	0.000133
(j) Pressure Deformation	0.0000300	0.0000182	0.0000820	0.0000511

Pollutant	**Nickel**		**Silver**	
Forming/Finishing Operation	**Maximum Daily (lbs/1000 lbs of product)**	**Maximum Monthly Avg. (lbs/1000 lbs of product)**	**Maximum Daily (lbs/1000 lbs of product)**	**Maximum Monthly Avg. (lbs/1000 lbs of product)**
(a) Acid Pickling	0.00391	0.00156	0.0000955	0.0000582
(b) Alkaline Cleaning	0.00391	0.00156	0.0000955	0.0000582
(c) Cold Forming	0	0	0	0
(d) Continuous Annealing	0.000196	0.0000779	0.00000477	0.00000291
(e) Electroplating	0.00782	0.00312	0.000191	0.000117

Table 14-23 (Continued)

(f) Hot Dip Coating	0.00114	0.000452	0.0000277	0.0000169
(g) Lubrication	0.0000939	0.0000374	0.00000229	0.00000140
(h) Mechanical Descaling	0.0000157	0.00000623	0.00000038	0.00000023
(i) Painting	0.000509	0.000203	0.0000125	0.00000756
(j) Pressure Deformation	0.000196	0.0000779	0.00000477	0.00000291

Pollutant	**Sulfide (as S)**		**Tin**	
Forming/Finishing Operation	**Maximum Daily (lbs/1000 lbs of product)**	**Maximum Monthly Avg. (lbs/1000 lbs of product)**	**Maximum Daily (lbs/1000 lbs of product)**	**Maximum Monthly Avg. (lbs/1000 lbs of product)**
(a) Acid Pickling	0.0630	0.0267	0.0000606	0.0000453
(b) Alkaline Cleaning	0.0630	0.0267	0.0000606	0.0000453
(c) Cold Forming	0	0	0	0
(d) Continuous Annealing	0.00315	0.00134	0.00000303	0.00000226
(e) Electroplating	0.126	0.0534	0.000122	0.0000905
(f) Hot Dip Coating	0.0183	0.00774	0.0000176	0.0000132
(g) Lubrication	0.00151	0.000641	0.00000145	0.00000109
(h) Mechanical Descaling	0.000252	0.000107	0.00000024	0.00000018
(i) Painting	0.00818	0.00347	0.00000788	0.00000588
(j) Pressure Deformation	0.00315	0.00134	0.00000303	0.00000226

Pollutant	**Zinc**	
Forming/Finishing Operation	**Maximum Daily (lbs/1000 lbs of product)**	**Maximum Monthly Avg. (lbs/1000 lbs of product)**
(a) Acid Pickling	0.000163	0.000111
(b) Alkaline Cleaning	0.000163	0.000111
(c) Cold Forming	0	0
(d) Continuous Annealing	0.00000811	0.00000553
(e) Electroplating	0.000325	0.000222
(f) Hot Dip Coating	0.0000471	0.0000321
(g) Lubrication	0.00000389	0.00000265

Table 14-23 (Continued)

(h) Mechanical Descaling	0.00000065	0.00000044
(i) Painting	0.0000211	0.0000144
(j) Pressure Deformation	0.00000811	0.00000553

Pollutant	Cyanide (T)		Cyanide (A)	
Forming/Finishing Operation	**Maximum Daily (lbs/1000 lbs of product)**	**Maximum Monthly Avg. (lbs/1000 lbs of product)**	**Maximum Daily (lbs/1000 lbs of product)**	**Maximum Monthly Avg. (lbs/1000 lbs of product)**
(a) Electroplating	0.000865	0.000513	0.000580	0.000282

As discussed in Section 15.2.7, upon agreement with the permitting authority, facilities with cyanide treatment have the option of achieving the limitation for either total or amenable cyanide. Additionally, upon agreement with the permitting authority, facilities must choose to monitor for TOP or TOC, or implement a management plan for organic chemicals as specified in Section 15.2.7.

14.5.6 NSPS for the Oily Wastes Subcategory

EPA expects that new facilities in the Oily Wastes Subcategory will discharge similar quantities of the same pollutants that existing sources discharge. Therefore, the need for NSPS regulation is the same as the need for BPT regulation. (See Section 14.1.6.)

EPA is proposing NSPS for this subcategory based on BAT Option 6, oil/water separation by chemical emulsion breaking, gravity separation, and oil skimming. The Agency determined that Option 6 is the best available demonstrated technology for the removal of pollutants in this subcategory and is proposing this option for the same reasons it selected this option for BPT and BAT. (See Section 14.1.6.)

Since EPA is proposing to set NSPS equal to BAT (Option 6) and this option is determined to be economically achievable for these facilities under BAT, EPA concluded that NSPS based on Option 6 would not create a barrier to entry.

14.5.7 NSPS for the Railroad Line Maintenance Subcategory

EPA expects that new facilities in the Railroad Line Maintenance Subcategory will discharge similar quantities of the same pollutants that existing sources discharge. Therefore, the need for NSPS regulation is the same as the need for BPT regulation. (See Section 14.1.7.)

EPA is proposing NSPS for this subcategory based on BAT Option 10, DAF plus in-process flow control and pollution prevention. The Agency determined that Option 10 is the best available demonstrated technology for the removal of pollutants in this subcategory and is proposing this option for the same reasons it selected this option for BPT and BAT. (See Section 14.1.7.)

EPA notes that railroad line maintenance facilities do not have revenue reported at the facility level, and it is therefore not possible to compare costs as a percentage of facility revenue for new and existing facilities in this subcategory. In addition, EPA is proposing to set NSPS equal to BAT (Option 10) and has determined that this option is economically achievable for these facilities under BAT; therefore, EPA concluded that NSPS based on Option 10 would not create a barrier to entry.

14.5.8 NSPS for the Shipbuilding Dry Dock Subcategory

EPA expects that new facilities in the Shipbuilding Dry Dock Subcategory will discharge similar quantities of the same pollutants that existing sources discharge. Therefore, the need for NSPS regulation is the same as the need for BPT regulation. (See Section 14.1.8.)

EPA is proposing NSPS for this subcategory based on BAT Option 10, DAF plus in-process flow control and pollution prevention. The Agency determined that Option 10 is the best available demonstrated technology for the removal of pollutants in this subcategory and is proposing this option for the same reasons it selected this option for BPT. (See Section 14.1.8.)

Since EPA is proposing to set NSPS equal to BAT (Option 10) and has determined that this option is economically achievable for these facilities under BAT, EPA concluded that NSPS based on Option 10 would not create a barrier to entry.

14.6 Pretreatment Standards for New Sources (PSNS)

Section 307(c) of CWA calls for EPA to promulgate pretreatment standards for new sources (PSNS) at the same time that it promulgates NSPS. New facilities have the opportunity to incorporate the best available demonstrated technologies including process changes, in-plant controls, and end-of-pipe treatment technologies.

The same technologies discussed previously for BAT and PSES are available as the basis for PSNS. Since new sites have the potential to install pollution prevention and pollution control technologies more cost effectively then existing sources, EPA strongly considered the more advanced treatment options for PSNS. The Agency discusses its analysis of these more stringent options for PSNS on a subcategory-by-subcategory basis below.

14.6.1 PSNS for the General Metals Subcategory

EPA expects that new facilities in the General Metals Subcategory will discharge similar quantities of the same pollutants that existing sources discharge. Therefore, the need for PSNS regulation is the same as the need for PSES regulation. (See Section 14.4.2.) Section 7 discusses the pass-through analysis for new sources.

EPA proposes PSNS for this subcategory based on BAT Option 4 for the same reasons it is proposing this option for NSPS. EPA is also requesting comment on basing PSNS on Option 2, as with NSPS. In addition, EPA proposes a 1 MGY flow cutoff exclusion for PSNS. This is the same flow cutoff level that EPA is proposing for PSES for the existing indirect discharging facilities in the General Metals Subcategory. The Agency concluded that a 1 MGY flow cutoff is appropriate for new indirect discharging facilities in the General Metals Subcategory based on the potential POTW permitting burden that would be associated with developing and then maintaining permits for new sources with low flows, and the likelihood that these facilities discharge a small amount of pound-equivalents at these low flow rates. The Agency assumes that the pound-equivalents removed per facility for new facilities with flows below or equal to 1 MGY would be even lower than the 22 pound-equivalents per facility for similarly sized existing sources in this subcategory. The Agency concluded that a similar (or even smaller) amount of pollutant removal is not significant and does not justify regulation of these facilities by a national categorical regulation. EPA solicits comment on whether it is appropriate to exclude new sources that discharge process wastewater equal to 1 million gallons or less for the reasons described above.

The Agency also strongly considered proposing PSNS based on ultrafiltration for oil and grease removal and chemical precipitation followed by sedimentation for TSS and metals removal. This option is equivalent to BAT Option 2 with the oil/water separator replaced by an ultrafilter. The Agency is soliciting comment and data on this PSNS option for the final rule.

The Agency determined that the cost of compliance with PSNS based on Option 4 would make up only 0.09 percent of a new facility's projected revenues and concluded that this would not create a barrier to entry.

Table 14-24 lists the proposed PSNS effluent limitations for the General Metals Subcategory. Section 10.0 describes EPA's data editing procedures and statistical methodology for calculating the proposed effluent limits for this subcategory.

Except at facilities where the process wastewater introduced into a POTW does not exceed 1 MGY, new indirect discharging facilities in the General Metals Subcategory must achieve the following.

Table 14-24

PSNS for the General Metals Subcategory

Regulated Parameter		Maximum Daily (mg/L (ppm))	Maximum Monthly Avg. (mg/L (ppm))
1.	Total Organic Carbon (TOC) (as indicator)	87	50
2.	Total Organics Parameter (TOP)	9.0	4.3
3.	Cadmium	0.02	0.01
4.	Chromium	0.17	0.07
5.	Copper	0.44	0.16
6.	Total Cyanide	0.21	0.13
7.	Amenable Cyanide	0.14	0.07
8.	Lead	0.04	0.03
9.	Manganese	0.29	0.18
10.	Molybdenum	0.79	0.49
11.	Nickel	1.9	0.75
12.	Silver	0.05	0.03
13.	Sulfide, Total	31	13
14.	Tin	0.03	0.03
15.	Zinc	0.08	0.06

As discussed in Section 15.2.7, upon agreement with the permitting authority, facilities with cyanide treatment have the option of achieving the limitation for either total or amenable cyanide. Upon agreement with the permitting authority, facilities must choose to monitor for TOP or TOC, or implement a management plan for organic chemicals as specified in Section 15.2.7. A POTW has the option of imposing mass-based standards in place of the concentration-based standards. To convert to mass-based standards, multiply each parameter's concentration-based standard by the average daily flow of process wastewater discharged by the source into the POTW.

14.6.2 PSNS for the Metal Finishing Job Shops Subcategory

EPA expects that new facilities in the Metal Finishing Job Shops Subcategory will discharge similar quantities of the same pollutants that existing sources discharge. Therefore, the need for PSNS regulation is the same as the need for PSES regulation (See Section 14.4.3). Section 7 discussed the pass-through analysis for new sources.

EPA is proposing PSNS for this subcategory based on BAT Option 4 for the same reasons it is proposing this option for NSPS. EPA is also requesting comment on PSNS limits based on Option 2. In addition, EPA is not proposing a flow cutoff exclusion for PSNS for this subcategory for the same reasons that it did not propose a flow cutoff for PSES (See Section 14.4.3).

The Agency also strongly considered proposing PSNS based on ultrafiltration for oil and grease removal and chemical precipitation followed by sedimentation for TSS and metals removal. This option is equivalent to BAT Option 2 with the oil/water separator replaced by an ultrafilter.

The Agency determined that the cost of compliance with PSNS based on Option 4 would make up 4.64 percent of a new facility's projected revenues and expects that this would not create a barrier to entry. EPA notes that this is a higher percentage than for other subcategories.

Table 14-25 lists the proposed PSNS effluent limitations for the Metal Finishing Job Shops Subcategory. Section 10.0 describes EPA's data editing procedures and statistical methodology for calculating the proposed effluent limits for this subcategory.

New indirect discharging facilities in the Metal Finishing Job Shops Subcategory must achieve the following.

Table 14-25

PSNS for Metal Finishing Job Shops Subcategory

Regulated Parameter		Maximum Daily (mg/L (ppm))	Maximum Monthly Avg. (mg/L (ppm))
1.	Total Organic Carbon (TOC) (as indicator)	78	59
2.	Total Organics Parameter (TOP)	9.0	4.3
3.	Cadmium	0.02	0.01
4.	Chromium	0.17	0.07
5.	Copper	0.44	0.16
6.	Total Cyanide	0.21	0.13
7.	Amenable Cyanide	0.14	0.07
8.	Lead	0.04	0.03
9.	Manganese	0.29	0.18
10.	Molybdenum	0.79	0.49
11.	Nickel	1.9	0.75

Regulated Parameter		Maximum Daily (mg/L (ppm))	Maximum Monthly Avg. (mg/L (ppm))
12.	Silver	0.05	0.03
13.	Sulfide, Total	31	13
14.	Tin	0.03	0.03
15.	Zinc	0.08	0.06

As discussed in Section 15.2.7, upon agreement with the permitting authority, facilities with cyanide treatment have the option of achieving the limitation for either total or amenable cyanide. Upon agreement with the permitting authority, facilities must choose to monitor for TOP or TOC, or implement a management plan for organic chemicals as specified in Section 15.2.7. A POTW has the option of imposing mass-based standards in place of the concentration-based standards. To convert to mass-based standards, multiply each parameter's concentration-based standard by the average daily flow of process wastewater discharged by the source into the POTW.

14.6.3 PSNS for the Non-Chromium Anodizing Subcategory

EPA expects that new facilities in the Non-Chromium Anodizing Subcategory will discharge similar quantities of the same pollutants that existing sources discharge and therefore EPA is not proposing pretreatment standards for new sources for this subcategory for the same reasons it is not proposing PSNS for this subcategory. See Section 14.4.4.

14.6.4 PSNS for the Printed Wiring Board Subcategory

EPA expects that new facilities in the Printed Wiring Board Subcategory will discharge similar quantities of the same pollutants that existing sources discharge. Therefore, the need for PSNS regulation is the same as the need for PSES regulation (see Section 14.4.5). Section 7 discusses the pass-through analysis for new sources.

EPA is proposing PSNS for this subcategory based on BAT Option 4 for the same reasons it is proposing this option for NSPS. As was the case for PSES, EPA is not proposing a flow cutoff exclusion for this subcategory for the same reasons discussed in Section 14.4.5.

The Agency also strongly considered proposing PSNS based on ultrafiltration for oil and grease removal and chemical precipitation followed by sedimentation for TSS and metals removal. This option is equivalent to BAT Option 2 with the oil/water separator replaced by an ultrafilter.

The Agency determined that the cost of compliance with PSNS based on Option 4 would make up only 0.20 percent of a new facility's projected revenues and concluded that this would not create a barrier to entry.

Table 14-26 lists the proposed PSNS effluent limitations for the Printed Wiring Board Subcategory. Section 10.0 describes EPA's data editing procedures and statistical methodology for calculating the proposed effluent limits for this subcategory.

New indirect discharging facilities in the Printed Wiring Board Subcategory must achieve the following.

Table 14-26

PSNS for the Printed Wiring Board Subcategory

Regulated Parameter		Maximum Daily (mg/L (ppm))	Maximum Monthly Avg. (mg/L (ppm))
1.	Total Organic Carbon (TOC) (as indicator)	101	67
2.	Total Organics Parameter (TOP)	9.0	4.3
3.	Chromium	0.17	0.07
4.	Copper	0.01	0.01
5.	Total Cyanide	0.21	0.13
6.	Amenable Cyanide	0.14	0.07
7.	Lead	0.04	0.03
8.	Manganese	0.29	0.18
9.	Nickel	1.9	0.75
10.	Sulfide, Total	31	13
11.	Tin	0.09	0.07
12.	Zinc	0.08	0.06

As discussed in Section 15.2.7, upon agreement with the permitting authority, facilities with cyanide treatment have the option of achieving the limitation for either total or amenable cyanide. Upon agreement with the permitting authority, facilities must choose to monitor for TOP or TOC, or implement a management plan for organic chemicals as specified in Section 15.2.7. A POTW has the option of imposing mass-based standards in place of the concentration-based standards. To convert to mass-based standards, multiply each parameter's concentration-based standard by the average daily flow of process wastewater discharged by the source into the POTW.

14.6.5 PSNS for the Steel Forming and Finishing Subcategory

EPA expects that new facilities in the Steel Forming and Finishing Subcategory will discharge similar quantities of the same pollutants that existing sources discharge.

Therefore, the need for PSNS regulation is the same as the need for PSES regulation. (See Section 14.4.6.) Section 7 discusses the pass-through analysis for new sources.

EPA is proposing PSNS for this subcategory based on BAT Option 4 for the same reasons it is proposing this option for NSPS. In addition, EPA is not proposing a flow cutoff exclusion for PSNS for this subcategory for the same reasons that it did not propose a flow cutoff for PSES. (See Section 14.4.6.)

The Agency also strongly considered proposing PSNS based on ultrafiltration for oil and grease removal and chemical precipitation followed by sedimentation for TSS and metals removal. This option is equivalent to BAT Option 2 with the oil/water separator replaced by an ultrafilter.

The Agency determined that the cost of compliance with PSNS based on Option 4 would make up only 0.17 percent of a new facility's projected revenues and concluded that this would not create a barrier to entry.

EPA expresses the proposed effluent limitations guidelines and standards for BPT, BAT, NSPS, PSES, and PSNS for the Steel Forming and Finishing Subcategory as mass limitations in pounds/1,000 pounds of product. Permit writers and control authorities shall compute mass effluent limitations and pretreatment requirements for each forming/finishing operation by multiplying the average daily production rate (or other reasonable measure of production) by the respective effluent limitations guidelines or standards listed in Table 14-27. Production-normalized flows for the Steel Forming and Finishing Subcategory are listed in Table 14-7. Permit writers and control authorities shall not include production from unit operations that do not generate or discharge process wastewater in the calculation of the operating rate. These mass-based limitations apply to the operations listed and defined in Section 14.1.5

Table 14-27 lists the proposed PSNS effluent limitations for the Steel Forming and Finishing Subcategory. Section 10.0 describes EPA's data editing procedures and statistical methodology for calculating the proposed effluent limits for this subcategory. New indirect discharging facilities in the Steel Forming & Finishing Subcategory must achieve the following.

Table 14-27

PSNS for the Steel Forming and Finishing Subcategory

Pollutant	TSS		O&G (as HEM)	
Forming/Finishing Operation	Maximum Daily (lbs/1000 lbs of product)	Maximum Monthly Avg. (lbs/1000 lbs of product)	Maximum Daily (lbs/1000 lbs of product)	Maximum Monthly Avg. (lbs/1000 lbs of product)
(a) Acid Pickling	0.0571	0.0358	0.0312	0.0239

Pollutant	TSS		O&G (as HEM)	
Forming/Finishing Operation	**Maximum Daily (lbs/1000 lbs of product)**	**Maximum Monthly Avg. (lbs/1000 lbs of product)**	**Maximum Daily (lbs/1000 lbs of product)**	**Maximum Monthly Avg. (lbs/1000 lbs of product)**
(b) Alkaline Cleaning	0.0571	0.0358	0.0312	0.0239
(c) Cold Forming	0	0	0	0
(d) Continuous Annealing	0.00286	0.00179	0.00156	0.00120
(e) Electroplating	0.115	0.0716	0.0623	0.00478
(f) Hot Dip Coating	0.0166	0.0104	0.00903	0.00693
(g) Lubrication	0.00137	0.000859	0.000748	0.000574
(h) Mechanical Descaling	0.000229	0.000144	0.000125	0.0000956
(i) Painting	0.00743	0.00466	0.00405	0.00311
(j) Pressure Deformation	0.00286	0.00179	0.00156	0.00120

Pollutant	TOC		TOP	
Forming/Finishing Operation	**Maximum Daily (lbs/1000 lbs of product)**	**Maximum Monthly Avg. (lbs/1000 lbs of product)**	**Maximum Daily (lbs/1000 lbs of product)**	**Maximum Monthly Avg. (lbs/1000 lbs of product)**
(a) Acid Pickling	0.181	0.103	0.0188	0.00896
(b) Alkaline Cleaning	0.181	0.103	0.0188	0.00896
(c) Cold Forming	0	0	0	0
(d) Continuous Annealing	0.00901	0.00514	0.000937	0.000448
(e) Electroplating	0.361	0.206	0.0375	0.0180
(f) Hot Dip Coating	0.0523	0.0298	0.00543	0.00260
(g) Lubrication	0.00433	0.00247	0.000450	0.000215
(h) Mechanical Descaling	0.000721	0.000411	0.0000750	0.0000359
(i) Painting	0.0235	0.0134	0.00244	0.00117
(j) Pressure Deformation	0.00901	0.00514	0.000937	0.000448

Table 14-27 (Continued)

Pollutant	Cadmium		Chromium	
Forming/Finishing Operation	**Maximum Daily (lbs/1000 lbs of product)**	**Maximum Monthly Avg. (lbs/1000 lbs of product)**	**Maximum Daily (lbs/1000 lbs of product)**	**Maximum Monthly Avg. (lbs/1000 lbs of product)**
(a) Acid Pickling	0.0000267	0.0000184	0.000355	0.000143
(b) Alkaline Cleaning	0.0000267	0.0000184	0.000355	0.000143
(c) Cold Forming	0	0	0	0
(d) Continuous Annealing	0.00000133	0.00000092	0.0000178	0.00000714
(e) Electroplating	0.0000534	0.0000368	0.000710	0.000286
(f) Hot Dip Coating	0.00000773	0.00000533	0.000103	0.0000415
(g) Lubrication	0.00000064	0.00000044	0.00000851	0.00000343
(h) Mechanical Descaling	0.00000011	0.00000007	0.00000142	0.00000057
(i) Painting	0.00000347	0.00000239	0.0000461	0.0000186
(j) Pressure Deformation	0.00000133	0.00000092	0.0000178	0.00000714

Pollutant	Copper		Lead	
Forming/Finishing Operation	**Maximum Daily (lbs/1000 lbs of product)**	**Maximum Monthly Avg. (lbs/1000 lbs of product)**	**Maximum Daily (lbs/1000 lbs of product)**	**Maximum Monthly Avg. (lbs/1000 lbs of product)**
(a) Acid Pickling	0.000898	0.000327	0.0000692	0.0000517
(b) Alkaline Cleaning	0.000898	0.000327	0.0000692	0.0000517
(c) Cold Forming	0	0	0	0
(d) Continuous Annealing	0.0000449	0.0000164	0.00000346	0.00000258
(e) Electroplating	0.00180	0.000654	0.000139	0.000104
(f) Hot Dip Coating	0.000261	0.0000949	0.0000201	0.0000150
(g) Lubrication	0.0000216	0.00000785	0.00000166	0.00000124
(h) Mechanical Descaling	0.00000359	0.00000131	0.00000028	0.00000021
(i) Painting	0.000117	0.0000425	0.00000899	0.00000671
(j) Pressure Deformation	0.0000449	0.0000164	0.00000346	0.00000258

Table 14-27 (Continued)

Pollutant	Manganese		Molybdenum	
Forming/Finishing Operation	**Maximum Daily (lbs/1000 lbs of product)**	**Maximum Monthly Avg. (lbs/1000 lbs of product)**	**Maximum Daily (lbs/1000 lbs of product)**	**Maximum Monthly Avg. (lbs/1000 lbs of product)**
(a) Acid Pickling	0.000600	0.000364	0.00164	0.00103
(b) Alkaline Cleaning	0.000600	0.000364	0.00164	0.00103
(c) Cold Forming	0	0	0	0
(d) Continuous Annealing	0.0000300	0.0000182	0.0000820	0.0000511
(e) Electroplating	0.00120	0.000728	0.00328	0.00205
(f) Hot Dip Coating	0.000174	0.000106	0.000476	0.000297
(g) Lubrication	0.0000144	0.00000873	0.0000394	0.0000246
(h) Mechanical Descaling	0.00000240	0.00000146	0.00000656	0.00000409
(i) Painting	0.0000780	0.0000473	0.000214	0.000133
(j) Pressure Deformation	0.0000300	0.0000182	0.0000820	0.0000511

Pollutant	Nickel		Silver	
Forming/Finishing Operation	**Maximum Daily (lbs/1000 lbs of product)**	**Maximum Monthly Avg. (lbs/1000 lbs of product)**	**Maximum Daily (lbs/1000 lbs of product)**	**Maximum Monthly Avg. (lbs/1000 lbs of product)**
(a) Acid Pickling	0.00391	0.00156	0.0000955	0.0000582
(b) Alkaline Cleaning	0.00391	0.00156	0.0000955	0.0000582
(c) Cold Forming	0	0	0	0
(d) Continuous Annealing	0.000196	0.0000779	0.00000477	0.00000291
(e) Electroplating	0.00782	0.00312	0.000191	0.000117
(f) Hot Dip Coating	0.00114	0.000452	0.0000277	0.0000169
(g) Lubrication	0.0000939	0.0000374	0.00000229	0.00000140
(h) Mechanical Descaling	0.0000157	0.00000623	0.00000038	0.00000023
(i) Painting	0.000509	0.000203	0.0000125	0.00000756
(j) Pressure Deformation	0.000196	0.0000779	0.00000477	0.00000291

Table 14-27 (Continued)

Pollutant	Sulfide (as S)		Tin	
Forming/Finishing Operation	**Maximum Daily (lbs/1000 lbs of product)**	**Maximum Monthly Avg. (lbs/1000 lbs of product)**	**Maximum Daily (lbs/1000 lbs of product)**	**Maximum Monthly Avg. (lbs/1000 lbs of product)**
(a) Acid Pickling	0.0630	0.0267	0.0000606	0.0000453
(b) Alkaline Cleaning	0.0630	0.0267	0.0000606	0.0000453
(c) Cold Forming	0	0	0	0
(d) Continuous Annealing	0.00315	0.00134	0.00000303	0.00000226
(e) Electroplating	0.126	0.0534	0.000122	0.0000905
(f) Hot Dip Coating	0.0183	0.00774	0.0000176	0.0000132
(g) Lubrication	0.00151	0.000641	0.00000145	0.00000109
(h) Mechanical Descaling	0.000252	0.000107	0.00000024	0.00000018
(i) Painting	0.00818	0.00347	0.00000788	0.00000588
(j) Pressure Deformation	0.00315	0.00134	0.00000303	0.00000226

Pollutant	Zinc	
Forming/Finishing Operation	**Maximum Daily (lbs/1000 lbs of product)**	**Maximum Monthly Avg. (lbs/1000 lbs of product)**
(a) Acid Pickling	0.000163	0.000111
(b) Alkaline Cleaning	0.000163	0.000111
(c) Cold Forming	0	0
(d) Continuous Annealing	0.00000811	0.00000553
(e) Electroplating	0.000325	0.000222
(f) Hot Dip Coating	0.0000471	0.0000321
(g) Lubrication	0.00000389	0.00000265
(h) Mechanical Descaling	0.00000065	0.00000044
(i) Painting	0.0000211	0.0000144
(j) Pressure Deformation	0.00000811	0.00000553

As discussed in Section 15.2.7, upon agreement with the permitting authority, facilities with cyanide treatment have the option of achieving the limitation for either total or amenable cyanide. Upon agreement with the permitting authority, facilities must choose to

monitor for TOP or TOC, or implement a management plan for organic chemicals as specified in Section 15.2.7.

14.6.6 PSNS for the Oily Wastes Subcategory

EPA expects that new facilities in the Oily Wastes Subcategory will discharge similar quantities of the same pollutants that existing sources discharge. Therefore, the need for PSNS regulation is the same as the need for PSES regulation. (See Section 14.4.7.). Section 7 discusses the pass-through analysis for new sources.

EPA is proposing PSNS for this subcategory based on BAT Option 6 for the same reasons it is proposing this option for NSPS. In addition, EPA is proposing a 2 MGY flow cutoff exclusion for PSNS with serious consideration of a 3 MGY flow cutoff as well. This is the same flow cutoff level that EPA is proposing for PSES for the existing indirect discharging facilities in the Oily Wastes Subcategory. The Agency is proposing a 2 MGY flow cutoff is appropriate for new indirect discharging facilities in the Oily Wastes Subcategory based on the potential POTW permitting burden that would be associated with developing and then maintaining permits for new sources with low flows, and the likelihood that these facilities discharge a small amount of pound-equivalents at these low flow rates. The Agency assumes that the pound-equivalents per facility for new facilities with flows below or equal to 2 MGY would be even lower than the 2 pound-equivalents per facility for similarly sized existing sources in this subcategory. The Agency concluded that a similar (or even smaller) amount of pollutant removal is not justified by the cost of the regulation for new indirect oily waste facilities discharging less than or equal to 2 MGY.

Since EPA is proposing to set PSNS equal to PSES (Option 6) and this option is determined to be economically achievable for these facilities under PSES, the Agency concluded that this would not create a barrier to entry.

14.6.7 PSNS for the Railroad Line Maintenance Subcategory

EPA expects that new facilities in the Railroad Line Maintenance Subcategory will discharge similar quantities of the same pollutants that existing sources discharge. Therefore, EPA is proposing not to establish PSNS for this subcategory for the same reasons that it did not propose PSES. (See Section 14.4.8.)

14.6.8 PSNS for the Shipbuilding Dry Dock Subcategory

EPA expects that new facilities in the Shipbuilding Dry Dock Subcategory will discharge similar quantities of the same pollutants that existing sources discharge. Therefore, EPA is proposing not to establish PSNS for this subcategory for the same reasons that it did not propose PSES. (See Section 14.4.9.)

Appendix A

Pollution Prevention Alternative for the Metal Finishing Job Shops Subcategory

Introduction

The Agency is considering allowing indirect discharge facilities in the Metal Finishing Job Shops subcategory, with approval by their control authority (e.g., POTW), to demonstrate compliance with specified pollution prevention and water conservation practices (in addition to maintaining compliance with the existing Metal Finishing and Electroplating Effluent Guidelines or approved local water quality-based limits, whichever is more stringent) in lieu of meeting the requirements of the MP&M regulation. Facilities in the Metal Finishing Job Shops subcategory that do not wish to use the compliance alternative would need to meet the full requirements of the MP&M regulation as specified in today's proposed rule.

EPA has solicited comment on whether to allow all facilities in the Metal Finishing Job Shops subcategory to comply with the P2 Alternative or whether the P2 Alternative should only be available to facilities below a specified wastewater discharge volume. EPA has proposed low flow exclusions for indirect dischargers in the General Metals (1 MGY) and Oily Wastes (2 MGY) subcategories due to potential permitting burden on POTWs.

Background

The proposed pollution prevention alternative for the Metal Finishing Job Shops Subcategory grew out of the National Metal Finishing Strategic Goals Program ("SGP"). The SGP was developed out of EPA's sector based Common Sense Initiative. In 1994, EPA launched the CSI to promote "cleaner, cheaper, and smarter" environmental performance, using a non-adversarial, stakeholder consensus process to test innovative ideas and approaches. The SGP is a cooperative effort that involves all stakeholders (e.g., industry, regulators, environmental/citizen groups) to define a fundamentally different approach to environmental and public health protection by exploring a more flexible, cost-effective and environmentally protective solutions tailored to specific industry needs. The Metal Finishing SGP is a performance-based, voluntary program which includes commitments by the industry to meet multimedia environmental targets substantially reducing pollution from their operations beyond what is required by law. These goals will conserve water, energy and metals, and reduce hazardous emissions. The other stakeholders in this process (EPA, State and local regulators, and environmental/community groups) have also committed to working with the industry participants to help them meet their goals through compliance, technical, and financial assistance, removing regulatory and policy barriers, offering incentives, and an open dialogue as issues arise.

The SGP represents a long-term strategic vision for improved environmental protection by the entire metal finishing industry. The metal finishing industry's tangible commitment to work with the Agency lays the foundation for this pollution prevention (P2) compliance alternative.

Pollution Prevention Alternative Plan

The purpose of a pollution prevention compliance alternative ("P2 Alternative") is to reduce economic impacts on the facilities in the Metal Finishing Job Shops subcategory and to take into consideration the activities and achievements of this Common Sense Initiative ("CSI") sector to test innovative approaches to environmental protection, which has culminated in the National Metal Finishing Strategic Goals Program.

One way that EPA is considering to specify pollution prevention and water conservation practices, without stifling innovation and advances, is to require facilities to choose practices from a larger list (or menu) of categories of specified practices (see below). EPA is considering requiring practices in all ten categories. The following is an example of the format and potential pollution prevention practices that EPA is considering for incorporation into the final MP&M rule:

Category 1. Must Use Practices that Reduce and/or Recover Drag-Out
To satisfy this requirement, facilities must implement three or more drag-out reduction practices or use at least one drag-out recovery (i.e., chemical recovery) technology listed below on all electroplating or surface finishing lines.

Drag-out Reduction Practices

- Lower process solution viscosity and/or surface tension by lowering chemical concentration, increasing bath temperature, or use wetting agents.
- Reduce drag-out volume by modifying rack/barrel design and perform rack maintenance to avoid solution trapping under insulation.
- Position parts on racks in a manner that avoids trapping solution.
- Reduce speed of rack/barrel withdraw from process solution and/or increase dwell time over process tank.
- Rotate barrels over process tank to improve drainage.
- Use spray/fog rinsing over the process tank (limited applicability).
- Use drip boards and return process solution to the process tank.
- Use drag-out tanks, where applicable, and return solution to the process tank.
- Work with customers to ensure that part design maximizes drainage

Drag-out Recovery
Use a chemical recovery technology to recover drag-out from wastewater.

- Evaporators
- Ion exchange
- Electrowinning
- Electrodialysis
- Reverse osmosis

Category 2. Must Use Good Rinse System Design for Water Conservation
To satisfy this requirement, facilities must implement three or more elements of good rinse system design listed below on all electroplating or surface finishing lines:

- Select the minimum size rinse tank in which the parts can be rinsed and use the same size for the entire plating line, where practical.
- Locate the water inlet and discharge points of the tank at opposite positions in the tank to avoid short-circuiting or use a flow distributor to feed the rinse water evenly.
- Use air agitation, mechanical mixing or other means of turbulence.
- Use spray/fog rinsing (less effective with hidden surfaces).
- Use multiple rinse tanks in a counter-flow configuration (i.e., counter-current cascade rinsing).
- Reuse rinse water multiple times in different rinse tanks for succeeding less critical rinsing

Category 3. Must Use Water Flow Control for Water Conservation
To satisfy this requirement, facilities must implement at least one effective method of water use control on all electroplating or surface finishing lines. Effective water use controls include, but are not limited to:

- Flow restrictors (Flow restrictors as a stand alone method of rinse water control are only effective with plating lines that have constant production rates, such as automatic plating machines. For other operations, there must also be a mechanism or procedure for stopping water flow during idle periods.)
- Conductivity controls
- Timer rinse controls
- Production activated control (e.g., spray systems activated when a rack or barrel enters/exits a rinse station.)

Category 4. Must Segregate Non-Process Water from Process Water
To satisfy this requirement, facilities must not combine non-process water such as non-contact cooling water with process wastewater prior to wastewater treatment.

Category 5. Must Use Water Conservation Practices with Air Pollution Control Devices
To satisfy this requirement, facilities operating air pollution control devices with wet scrubbers must recirculate the scrubber water as appropriate (periodic blowdown is allowed, as needed). Where feasible, reuse scrubber water in process baths.

Category 6. Must Practice Good Housekeeping
To satisfy this requirement, facilities must demonstrate compliance with each of the requirements listed below:

- Perform preventative maintenance on all valves and fittings (i.e., check for leaks and damage) and repair leaky valves and fittings in a timely manner.
- Inspect tanks and liners and repair or replace equipment as necessary to prevent ruptures and leaks. Use tank and liner materials that are appropriate for associated process solutions.

- Perform quick cleanup of leaks and spills in chemical storage and process areas.
- Remove metal buildup from racks and fixtures.

Category 7. Minimize the Entry of Oil Into Rinse Systems
To satisfy this requirement, facilities must do at least one of the practices listed below:

- Minimize the entry of oil into cleaning baths or use oil skimmers or other oil removal devices in cleaning baths when needed to prevent oil from entering rinse tanks.
- Work with customers to degrease parts prior to shipment to the plating facility to minimize the amount of oils on incoming materials.

Category 8. Must Sweep or Vacuum Dry Production Areas Prior to Rinsing with Water
To satisfy this requirement, facilities must sweep or vacuum dry production area floors prior to rinsing with water.

Category 9. Must Reuse Drum/Shipping Container Rinsate Directly in Process Tanks
To satisfy this requirement, when performing rinsing of raw material drums, storage drums, and/or shipping containers that contain pollutants regulated under the MP&M regulation, facilities must reuse the rinsate directly into process tanks or save for use in future production.

Category 10. Must Implement Environmental Management and Record Keeping System
To satisfy this requirement, facilities must meet the requirements listed below:

- Implement an environmental management program that includes, but is not limited to, the following elements:
- pollution prevention policy statement,
- environmental performance goals,
- pollution prevention assessment,
- pollution prevention plan,
- environmental tracking and record keeping system,
- procedures to optimize control parameter settings (e.g., ORP set point in cyanide destruction systems, optimum pH for chemical precipitation systems, etc.), and
- statement delineating minimum training levels for wastewater treatment operators.

(EPA notes that it has developed a template for a metal finishing facility-specific Environmental Management System that is being used in conjunction with the SGP in EPA's Region 9 in California– see http://www.strategicgoals.org/tools/home.htm for information on this template).

The first two categories listed above involve practices and techniques for reducing drag-out. Drag-out is the film of chemical solution covering parts and fixtures as they exit process solutions. For many metal finishing operations, drag-out and the subsequent contamination of rinse waters is the major pollution control challenge. Reducing the formation of drag-out, minimizing the introduction of drag-out to rinse systems, and recovering drag-out are important pollution prevention measures. EPA believes that drag-out reduction and recovery may prevent a substantial pollutant loading of metals from being discharged to the POTW However, EPA did not have sufficient information on the pollutant reductions, capital costs, and operating and

maintenance costs associated with installation and operation of drag-out reduction and recovery technologies to include such equipment explicitly into the model that EPA uses to develop national estimates of compliance costs and pollutant reductions. Some aspects of drag-out reduction are captured in the flow rinse reduction modules of the cost and loadings model (see Section 11 for a detailed discussion of the cost and loadings model). Good rinse design can reduce contamination of rinse water as well as reduce the volume of fresh water needed to perform the necessary rinsing. It also reduces the volume of wastewater requiring treatment, which in turn reduces costs and the volume of wastewater treatment sludge requiring disposal. EPA specifically solicits data on the pollutant reductions, capital costs, and operating and maintenance costs associated with installation and operation of drag-out reduction and recovery technologies.

EPA is considering allowing facilities complying with the P2 Alternative to substitute another pollution prevention practice for one listed above provided that the facility provides adequate justification for the modification in a written request submitted to the control authority. Facility owners must certify compliance with the pollution prevention requirements twice per year and maintain records at the facility indicating how each category requirement has been satisfied. Facilities choosing the P2 Alternative would also need to agree to make the practices enforceable. Reporting would occur in conjunction with their twice annual periodic reports on continued compliance under the General Pretreatment Regulations (40 CFR 403.12(e)).

EPA has solicited comment on all aspects of the Pollution Prevention Alternative for the Metal Finishing Job Shops subcategory including the list of practices as well as the possible format for the alternative. More specifically, EPA requested comment on whether there are additional practices that should be listed, the costs of implementing this compliance alternative, the pollutant reduction associated with this alternative, and whether EPA should offer this alternative to other subcategories (even those not currently regulated by the Metal Finishing and Electroplating effluent guidelines). EPA also requested comments from local regulators on the implementation burden, the required documentation, and on the ability to enforce a P2 Alternative.

15.0 PERMITTING GUIDANCE

This section provides guidance to permit writers and control authorities (e.g., POTWs) in implementing the MP&M effluent guidelines. In particular, this section provides permit writers and control authorities with information and data that can be useful in converting concentration-based limitations to mass-based limitations. As explained later in this section, EPA is not proposing mass-based limitations for any of the MP&M subcategories except for the Steel Forming and Finishing Subcategory. However, EPA recommends that permit writers or control authorities evaluate a facility's water use and develop mass-based limits in cases where a facility does not have sufficient water conservation practices in place. This section provides permit writers and control authorities with the tools to assess a facility's water conservation practices.

The MP&M category covers sites that generate and discharge wastewater while manufacturing, assembling, rebuilding, repairing, and maintaining metal parts, metal products, and machinery for use in one or more of the following industrial sectors: aerospace, aircraft, bus and truck, electronic equipment, hardware, household equipment, instruments, job shops, mobile industrial equipment, motor vehicles, office machines, ordnance, precious metals and jewelry, printed wiring boards, railroad, ships and boats, stationary industrial equipment, and miscellaneous metal products. The MP&M category includes state and local government facilities that manufacture, maintain, or rebuild metal parts, products, or machines (e.g., a town that operates its own bus, truck, and/or snow removal equipment maintenance facility). MP&M effluent guidelines also cover federal facilities or other mixed-use facilities that manufacture, maintain, or rebuild metal parts, products or machines (e.g., U.S. naval shipyards).

EPA is proposing limitations and standards for 8 subcategories of facilities (covering all 18 industrial sectors). Section 6.0 of this document discusses the proposed subcategorization scheme.

Section 15.1 provides background on the MP&M effluent guidelines. Section 15.2 provides basic guidance on implementing the MP&M effluent guidelines. Sections 15.3 through 15.6 present guidance on determining pollution prevention and water conservation practices for the major wastewater-generating unit operations performed at MP&M sites. Tables 15-1 through 15-9 and all figures are located at the end of the section.

15.1 Background

EPA has established effluent guidelines for 13 industrial categories that may perform operations that are sometimes found in MP&M facilities. These effluent guidelines are:

- Electroplating (40 CFR Part 413);
- Iron & Steel Manufacturing (40 CFR Part 420);
- Nonferrous Metals Manufacturing (40 CFR Part 421);
- Ferroalloy Manufacturing (40 CFR Part 424);

- Metal Finishing (40 CFR Part 433);
- Battery Manufacturing (40 CFR Part 461);
- Metal Molding & Casting (40 CFR Part 464);
- Coil Coating (40 CFR Part 465);
- Porcelain Enameling (40 CFR Part 466);
- Aluminum Forming (40 CFR Part 467);
- Copper Forming (40 CFR Part 468);
- Electrical & Electronic Components (40 CFR Part 469); and
- Nonferrous Metals Forming & Metal Powders (40 CFR Part 471).

In 1986, the Agency reviewed coverage of these regulations and identified a significant number of metals processing facilities discharging wastewater not covered under these 13 regulations. Based on this review, EPA performed a more detailed analysis of these unregulated sites and identified the discharge of significant amounts of pollutants. This analysis resulted in the formation of the "Metal Products and Machinery" (MP&M) category.

EPA recognizes that, in some cases, unit operations performed in industries covered by the existing effluent guidelines are the same as unit operations performed at MP&M facilities. In general, when unit operations and their associated wastewater discharges are already covered by an existing effluent guideline, they will remain covered under that effluent guideline. However, many facilities that are covered by the existing Electroplating (40 CFR 413) and Metal Finishing (40 CFR 433) effluent guidelines will now be covered by MP&M. EPA notes that the proposed MP&M rule amends the applicability of 40 CFR Parts 413, 433, 464, 467 and 471 to clarify coverage as it relates to facilities covered by the MP&M rule. Section 1 discusses the applicability of the MP&M rule, including the overlap with existing regulations.

When a facility covered by an existing metals effluent guideline (other than Electroplating or Metal Finishing) discharges wastewater from unit operations not covered under that existing metals guideline but covered under MP&M, the facility will need to comply with both regulations. In those cases, the permit writer or control authority (e.g., POTW) will combine the limitations using an approach that proportions the limitations based on the different production levels (for production-based standards) or wastewater flows (for concentration-based standards). POTWs refer to this approach as the "combined wastestream formula" (40 CFR 403.6(e)), while NPDES permit writers refer to it as the "building block approach." Application of the combined wastestream formula can be found in EPA's Guidance Manual For the Use of Production-Based Pretreatment Standards and the Combined Wastestream Formula (24). Other references which can be used by the permit writer or control authority include EPA's Guidance Manual for Electroplating and Metal Finishing Pretreatment Standards (25), and EPA's NPDES Permit Writers' Manual (26). Section 15.2 discusses the combined wastestream formula in more detail. In addition, Section 15.2 discusses several monitoring alternatives which EPA has proposed to reduce burden on MP&M facilities.

As discussed in Section 14.0, the MP&M effluent limitations guidelines and standards consist of concentration-based limitations for seven subcategories and mass-based limitations for one

subcategory. EPA defines the MP&M subcategories in Section 6. Concentration-based limits apply to the following dischargers:

- Existing and new direct and indirect discharging Printed Wiring Board subcategory facilities;
- Existing and new direct and indirect discharging Metal Finishing Job Shops subcategory facilities;
- Existing and new direct discharging Railroad Line Maintenance subcategory facilities;
- Existing and new direct discharging Shipbuilding Dry Dock subcategory facilities;
- Existing and new direct discharging Non-Chromium Anodizing subcategory facilities;
- Existing and new direct discharging General Metals subcategory facilities;
- Existing and new indirect discharging General Metals subcategory facilities with flows greater than one million gallons per year of process wastewater;
- Existing and new direct discharging Oily Waste subcategory facilities; and
- Existing and new indirect discharging Oily Waste subcategory facilities with flows greater than two million gallons per year of process wastewater.

Mass-based limitations apply to:

- Existing and new direct and indirect discharging Steel Forming and Finishing subcategory facilities.

EPA is proposing mass-based limitations (instead of concentration based limitations) for direct and indirect discharging Steel Forming and Finishing subcategory facilities for several reasons. First, NPDES regulations (40CFR Part 122.45(f)) require permit writers to implement mass-based limits for direct dischargers and the General Pretreatment Standards (40CFR Part 403.6(d)) provides that the control authority may impose mass-based limitations on industrial users when appropriate. In the case of facilities in the Steel Forming and Finishing subcategory, EPA already regulates wastewater discharges from these facilities under 40CFR Part 420 using mass-based limits. As a result, these facilities are already accustomed to tracking their production rate (i.e., tons of product produced per day). Because of the uniform nature of the steel products produced by Steel Forming and Finishing facilities (wire, rod, bars, pipe, or tube), facilities in this subcategory can track the weight of product produced in a relatively straight forward manner. One of the primary reasons that EPA is not proposing mass-based limitations for other subcategories is the fact that most MP&M facilities do not collect production information on a wastestream-by-wastestream basis, and therefore development of mass-based limitations could create a significant burden for the permit writer, control authority, and the MP&M facility. (See Section 15.2.3 for a discussion on implementing the Steel Forming and Finishing mass-based limits).

The following facilities are excluded from this regulation: existing and new indirect dischargers from the General Metals Subcategory that discharge less than or equal to one million gallons per year of process wastewater; existing and new indirect dischargers from the Oily Wastes Subcategory that discharge less than or equal to two million gallons per year of process wastewater; existing and new indirect discharging Railroad Line Maintenance subcategory facilities; existing and new indirect discharging Shipbuilding Dry Dock subcategory facilities; and existing and new indirect discharging Non-Chromium Anodizing subcategory facilities. Existing and new indirect discharging Non-Chromium Anodizing subcategory facilities remain covered by the electroplating (40 CFR Part 413) and metal finishing (40 CFR Part 433) effluent guidelines, as applicable.

As mentioned above, EPA is not proposing that permit writers or control authorities implement the MP&M limits on a mass basis except for the Steel Forming and Finishing Subcategory. However, EPA recommends that permit writers or control authorities evaluate a facility's water use and develop mass-based limits when a facility does not have sufficient water conservation practices. At 40 CFR 122.45(f), EPA requires permit writers to implement mass-based limitations for direct dischargers, but the NPDES regulations allow an exception when the limits are expressed in terms of other units of measurement (e.g., concentration). Section 403.6(d) of the CWA provides that the control authority may impose mass-based limitations on industrial users which are using dilution to meet applicable pretreatment requirements or where mass-based limitations is appropriate. Sections 15.3 through 15.6 provide permit writers and control authorities with the tools to assess a facility's water conservation practices.

For MP&M facilities that have good water conservation practices, the concentration-based effluent limitations may be sufficient. Sections 15.3 through 15.6 provide the permit writer or control authority with methodologies to determine if sites are complying with the concentration-based effluent limits without increasing process water usage (i.e., dilution). For MP&M facilities that do not have good water conservation practices, the permit writer or control authority can use the information provided in this section to develop mass-based limitations. EPA believes that this approach will reduce the implementation burden associated with establishing mass-based limitations for all MP&M facilities, and will still increase use of water conservation practices at the facilities where it is most appropriate. EPA anticipates that MP&M facilities that have been using the best pollution prevention and water conservation practices may request that the permit writer or POTW use mass-based limits in their permits.

EPA based the proposed concentration-based MP&M effluent limitations on a technology train consisting of in-process pollution prevention and flow-reduction technologies followed by end-of-pipe treatment. The in-process technologies include: conductivity meters, flow restrictors, and countercurrent cascade rinsing for flowing rinses; at-the-source machine coolant recycling; and at-the-source paint curtain recycling. The end-of-pipe treatment for the five metal-bearing subcategories include pretreatment steps such as chromium reduction, cyanide destruction, oil/water separation, and chelated metals treatment, followed by chemical precipitation with solids removal. The end-of-pipe treatment for the Oily Wastes Subcategory is

chemical emulsion breaking and oil water separation and the end-of-pipe treatment for the Railroad Line Maintenance and Shipbuilding and Dry Docks Subcategory is dissolved air flotation. Section 9.0 discusses in detail the treatment technology options for various subcategories. EPA's effluent limitations guidelines and standards do not require that a discharger (or POTW industrial user) install any prescribed treatment system to comply with the limitations and standards. Facility operators are free to choose any mechanism or combination of treatment options they wish, including sending process wastewater off-site for treatment, so long as the operator does not discharge (or introduce to a POTW) wastewater in violation of EPA's limitations and standards.

EPA is proposing to establish a three-year deadline (from the date of publication of the final MP&M rule) for compliance with the MP&M pretreatment standards for existing sources (PSES). EPA is proposing a three-year deadline because design and construction of systems adequate for compliance with PSES will be a substantial undertaking for many MP&M sites. In addition, control authorities (e.g., POTWs) will need the time to develop the permits or other control mechanisms for their industrial users. Once EPA finalizes the MP&M rule, these limitations will be reflected in NPDES permits issued to direct dischargers. New sources must comply with the new source standards and limitations (PSNS and NSPS) of the MP&M rule (once it is finalized) at the time they commence discharging MP&M process wastewater. Because the final rule is not expected within 120 days of the proposed rule, the Agency considers a discharger a new source if its construction commences following promulgation of the final rule (40 CFR 122.2; 40 CFR 403.3). In addition, the current MP&M proposal notice fully replaces the MP&M Phase I proposal, published on May 30, 1995. Therefore, compliance deadlines in that proposal would obviously no longer apply.

15.2 Implementing the MP&M Effluent Guidelines

Once the permit writer or control authority determines applicability and the appropriate subcategory for a site (see Section 6), EPA suggests that the permit writer or control authority conduct a process-water-use analysis to determine if the site currently implements sufficient pollution prevention and water conservation practices. Figure 15-1 outlines the decision making steps for the process-water-use analysis. EPA defines process wastewater as any water that, during manufacturing, rebuilding, or maintenance, comes into direct contact with or results from the production or use of any raw materials, intermediate product, finished product, by-product, or waste product. The Agency does not consider noncontact cooling water a process wastewater. However, it does consider wastewater from the operation of air pollution control equipment used in MP&M process areas process wastewater. (See Section 1.3 for a discussion of the applicability of wastewater streams.)

Section 15.2.3 describes the use and appropriateness of historical flow data to calculate mass-based limitations while Section 15.2.4 describes the use of EPA's flow data from MP&M surveys to develop mass-based limits. The Agency recommends that the permit writer or control authority use historical flow data only when converting concentration-based limits for a site that has demonstrated pollution prevention and water conservation practices in place (e.g.,

on-demand countercurrent cascade rinses, in-process metal recovery, recycling of machining coolants) for unit operations contributing most of the site's flow. A site with good pollution prevention and water conservation practices may request that their discharge permit or control mechanism contain mass-based limits. Section 15.2.7 discusses several proposed flexible monitoring alternatives that are expected to reduce burden. Sections 15.3 through 15.6 discuss examples of common pollution prevention and water conservation practices applicable to the major wastewater-generating MP&M operations. These sections also provide information for assessing the performance of these practices at MP&M sites.

Unit operations typically contributing the majority of the flow from a MP&M site are:

- Surface treatment rinses (e.g., acid and alkaline treatment rinsing, electroplating rinsing, anodizing rinsing, and chemical conversion coating rinsing);
- Machining operations;
- Painting operations; and
- Cleaning operations.

These operations produce approximately 77 percent of the wastewater generated by MP&M sites. EPA estimates that approximately 96 percent of the 10,300 MP&M wastewater-discharging sites perform one or more of these operations. For facilities that do not have sufficient pollution prevention and water conservation practices in place, EPA recommends that the permit writer or control authority use best professional judgment (BPJ) when converting from the concentration-based limits to mass-based limits. Sections 15.2.4 and 15.3 contain information that will be helpful in using BPJ for this purpose.

15.2.1 Application of the Building Block Approach for Direct Dischargers

For instances where a direct discharger is covered by multiple categorical standards (e.g., MP&M, Iron and Steel - 40 CFR Part 420, and Aluminum Forming - 40 CFR Part 467) or multiple subcategories[1] within MP&M, the NPDES permit writer must apply the limits from each categorical standard (and/or MP&M subcategory) to derive the effluent limits for the facility. If a facility combines all wastewater regulated by the various effluent guidelines prior to treatment or discharge to surface waters, then the permit writer would combine the allowable pollutant concentrations or loadings for each subcategory (proportioning the flow or load appropriately) to arrive at a single, combined set of technology-based effluent limits for the facility - the "building block" approach (24). In circumstances where a facility combines a wastestream for which a particular pollutant is not regulated by the applicable categorical standard with another wastestream for which the pollutant is regulated, then the permit writer must ensure that the stream that does not contain the regulated pollutant does not dilute the stream containing the regulated pollutant to the point where the pollutant is not analytically detectable. If this occurs, then federal regulations at 40 CFR Part 122.45(h) authorize the permit writer to establish internal monitoring points.

[1] EPA notes that if a facility that has wastewater that falls under the Oily Wastes Subcategory and wastewater under the General Metals Subcategory the facility would be covered by the General Metals limits only, unless the site treats the wastewater in separate wastewater treatment systems.

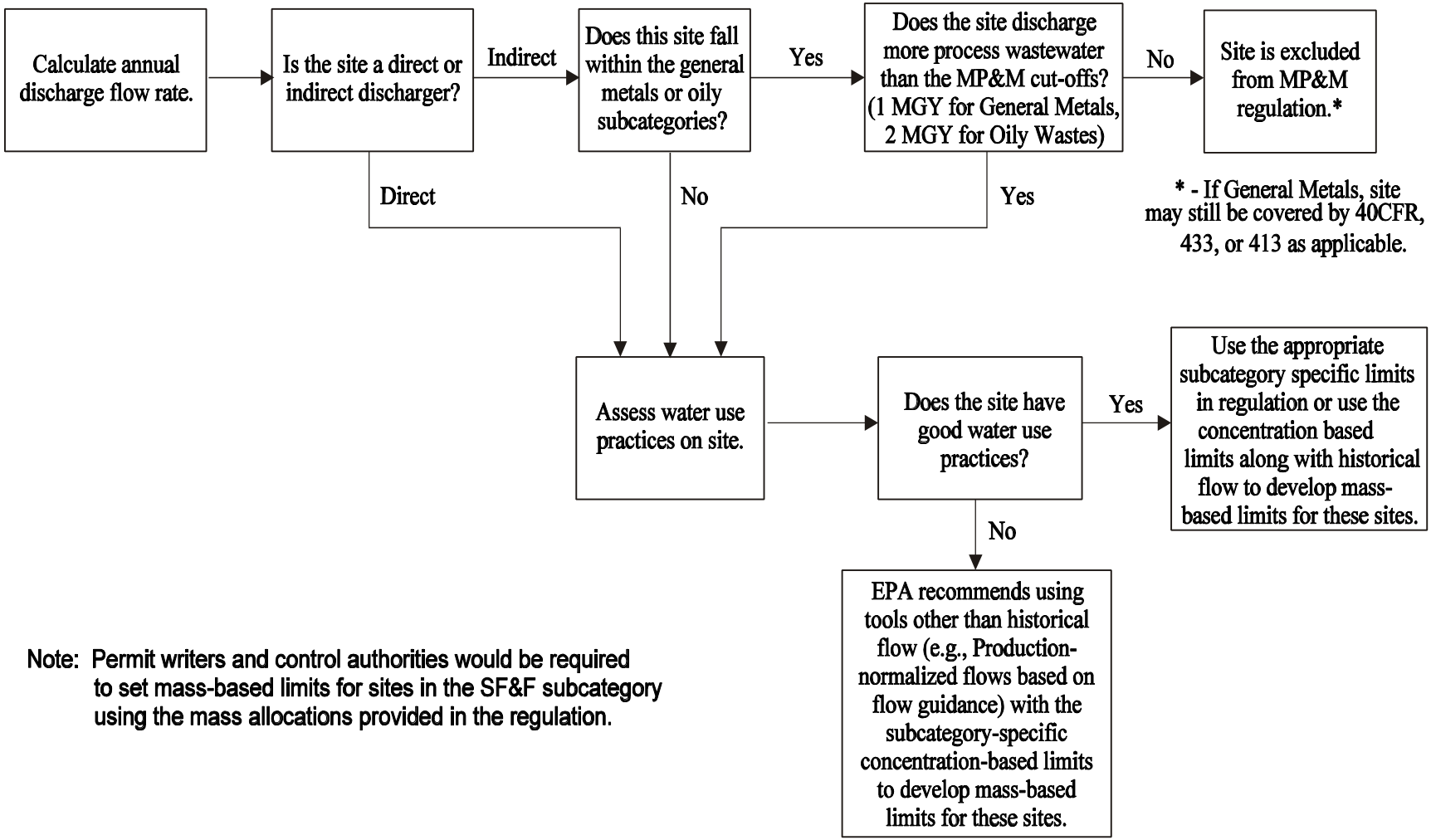

Note: Permit writers and control authorities would be required to set mass-based limits for sites in the SF&F subcategory using the mass allocations provided in the regulation.

Figure 15-1. MP&M Permitting Process Flow Chart

The equation below describes the flow-weighted building block approach for calculating concentration-based daily maximum limits.

$$C_T \; ' \; \mathbf{j} \; \frac{F_L}{F_T} \times C_L \qquad \textbf{(15-1)}$$

where:

C_T	=	The alternate concentration limit for the combined wastestream (mg/L);
C_L	=	The categorical effluent limitation concentration limit for a pollutant in the regulated stream (mg/L);
F_L	=	The average daily flow of stream (L/day); and
F_T	=	The total daily flow of all combined streams (L/day).

To use the building block approach (and combined wastestream formula) to arrive at a single set of technology-based effluent limits for the facility, the permit writer or control authority can use the following steps:

Step 1. Determine the concentration-based or mass-based limits for each industrial category.

Step 2. Determine the flow rates for the unit operations in each industrial category. For facilities with good pollution prevention and water conservation practices in place, flow rates can be estimated from historical flow data. For facilities without good pollution prevention and water conservation practices in place, the permit writer or control authority can estimate flows using the production normalized flows (PNFs) provided in Table 15-1 and can make a reasonable estimate of production (see Section 15.2.4).

Step 3. Multiply the concentration-based limit (mg/L) from each industrial category by the flow rate (L/day) from the industrial category to determine a daily mass (mg/day). Sum the daily mass from each category and divide by the total combined flow rate at the monitoring point.

The following is an example showing how the building block approach can be used to calculate an effluent limit for nickel when two categorical wastewaters are combined in a single treatment system.

<u>Example 1</u>

A household equipment manufacturer has effluent limitations for nickel under two categorical standards (MP&M and Porcelain Enameling (40 CFR Part 466)), and combines each wastestream in a single wastewater treatment system. Assuming the facility has good pollution prevention and water conservation practices in place, the maximum daily limit for nickel following treatment would be calculated as follows:

MP&M General Metals maximum daily Nickel limit: 0.5 mg/L, example flow: 75,700 L/day (20,000 gal/day)

Part 466 maximum daily Nickel limit[1]: 0.37 lbs/1 million ft^2 (coating), example flow: 151,400 L/day (40,000 gal/day), example coating throughput: 600,000 ft^2/day.

Part 466 maximum daily Nickel concentration:

$$\frac{0.37 \text{ lbs/1 million ft}^2 \times 0.6 \text{ million ft}^2\text{/day} \times 1{,}000{,}000 \text{ mg/kg}}{2.2 \text{ lbs/kg} \times 151{,}400 \text{ L/day}}$$

Nickel concentration: 0.67 mg/L

Combined MP&M and Part 466 Nickel concentration (daily max) =

$$\left(\frac{75{,}700 \text{ L/day}}{75{,}700 \text{ L/day \% } 151{,}400 \text{ L/day}} \times 0.5 \text{ mg/L}\right) \% \left(\frac{151{,}400 \text{ L/day}}{75{,}700 \text{ L/day \% } 151{,}400 \text{ L/day}} \times 0.67 \text{ mg/L}\right)$$

Combined Nickel concentration limit (daily max) = 0.17 + 0.45 = 0.62 mg/L

15.2.2 Application of the Combined Wastestream Formula for Indirect Dischargers

When a facility has multiple categorical effluent limitations and discharges to a POTW, the control authority must apply the combined wastestream formula (40 CFR Part 403.6(e)) to calculate the pretreatment standards. The combined wastestream formula is based on three types of waste streams that can exist at an industrial facility: regulated, unregulated, and dilute. A regulated wastestream from an industrial process is regulated by a categorical pretreatment standard for a pollutant. An unregulated wastestream is not covered by a categorical pretreatment standard and is not classified as a dilute stream, or is not regulated for the pollutant in question, although it is regulated for others. A dilute stream includes sanitary wastewater, noncontact cooling water and boiler blowdown, and waste streams listed in Appendix D to 40 CFR Part 403.

According to 40 CFR Part 403, the combined wastestream formula is:

$$C_T \text{ ' } \frac{\mathbf{j}\ C_I F_I}{\mathbf{j}\ F_I} \times \frac{F_T \text{ \& } F_D}{F_T} \qquad \textbf{(15-2)}$$

where:

C_T = The alternate concentration limit for the combined wastestream (mg/L);

[1]Production-based BAT nickel limit for porcelain enameling (coating operation) is 0.37 lbs/1 million ft^2 (40 CFR Part 466)

C_I = The categorical pretreatment standard concentration limit for a pollutant in the regulated stream I (mg/L);
F_I = The average daily flow of stream I (L/day);
F_D = The average daily flow from dilute waste streams as defined in 40 CFR Part 403 (L/day); and
F_T = The total daily flow (L/day).

As described in 40 CFR Part 403, the methodology for developing combined wastestream formula daily maximum limits is essentially the same as the methodology for the "building block" approach used for direct dischargers (24). If a site combines wastewater regulated by multiple pretreatment standards prior to treatment or discharge to a POTW, then the control authority would combine the allowable pollutant concentrations or loadings for each category (proportioning the flow appropriately) to arrive at a single set of technology-based pretreatment standards for the facility.

Like the building block approach, the permit writer or control authority can also use the combined wastestream formula on mass-based limitations. The example below shows how to calculate a mass-based limit for zinc when multiple categorical wastewaters are combined.

Example 2

A household equipment manufacturer with good water conservation practices in place, combines wastewater from the MP&M General Metals subcategory, the Porcelain Enameling category, and the Copper Forming category at an on-site chemical precipitation and clarification wastewater treatment system. Effluent from the treatment system is combined with sanitary wastewater at the outfall to the POTW.

Industrial Category	Wastestream Type	Historical Flow (mgd)	Zn Limit (mg/L)
MP&M General Metals	Regulated	0.1	0.38
Porcelain Enameling (Steel-coating Subcategory only)	Regulated	0.075	1.33[1]
Copper Forming	Regulated	0.4	Production Based[2]
Sanitary Waste	Dilution	0.05	N/A

1. Alternate Mass/Production based limits 53.3 mg/m^2 for preparation and 1.68 mg/m^2 for coating
2. Production based limits = 0.943 mg/off-kg of copper heat treated for solution heat treatment

MP&M General Metals Subcategory

Allowable Zn Mass = 0.38 mg/L × 100,000 gal/day × 3.785 L/gal = 143,830 mg/day

Porcelain Enameling

Example average daily production: 5,570 m^2 of preparation
7,250 m^2 of coating
Allowable Zn Mass = (53.3 mg/m^2 × 5,570 m^2/day) + (1.68 mg/m^2 × 7,250 m^2/day) = 309,061 mg/day

Copper Forming

Example average daily production: 30,000 off-kg of copper heat treated per day
Allowable Zn Mass = 0.943 mg/off-kg × 30,000 off-kg/day = 28,290 mg/day

Combined Wastestream Formula Zinc Discharge Limit: 143,830 + 309,061 + 28,290 = 481,181 mg/day (1.06 lbs/day)

As with direct dischargers, in circumstances when the standards for one category regulate a different set of pollutants than the standards applicable to another category, the control authority must ensure that the stream that does not contain the regulated pollutant does not dilute the stream containing the regulated pollutant to the point where the pollutant is not analytically detectable. If this occurs, federal regulations at 40 CFR Part 403.6(e)(2) and (4) authorize the control authority to establish internal monitoring points.

15.2.3 Production-Based Limits for the Steel Forming and Finishing Subcategory

As mentioned previously, EPA is proposing production-based limits for facilities in the Steel Forming and Finishing subcategory. These facilities manufacture steel products with uniform shapes (wire, rod, bar, pipe or tube) and currently track the weight of product produced. Wastewater generating manufacturing operations in the Steel Forming and Finishing subcategory include but are not limited to acid pickling, alkaline cleaning, continuous annealing, electroplating, hot dip coating, pressure deformation, lubrication, mechanical descaling and painting. EPA developed the proposed production-based limits listed in Section 14 by following the three steps below:

Step 1. Determine the technology based concentration limits for each pollutant proposed for regulation. EPA transferred the BPT/BAT concentration-based limits from the General Metals subcategory for all pollutants proposed for regulation.

Step 2. Determine the PNF for each unit operation. EPA determined the amount of water used per ton of product produced (the production-normalized flow) for each steel forming and finishing operation performed at steel forming and finishing facilities. EPA determined the PNFs for each steel forming and finishing operation by taking the median of the PNFs reported by steel forming and finishing facilities in EPA's Iron and Steel detailed questionnaire. The following

definitions of steel forming and finishing operations indicate the wastewater flows that EPA included in each of the PNF determinations.

- *Acid pickling* means the removal of scale and/or oxide from steel surfaces using acid solutions. The mass-based limitations for acid pickling operations include wastewater flow volumes from acid treatment with and without chromium, acid pickling neutralization, annealing, alkaline cleaning, electrolytic sodium sulfate descaling, and salt bath descaling.

- *Alkaline cleaning* means the application of solutions containing caustic soda, soda ash, alkaline silicates, or alkaline phosphates to a metal surface primarily for removing mineral deposits, animal fats, and oils. The mass-based limitations for alkaline cleaning operations include wastewater flow volumes from alkaline cleaning for oil removal, alkaline treatment without cyanide, aqueous degreasing, annealing, and electrolytic cleaning operations.

- *Cold forming* means operations conducted on unheated steel for purposes of imparting desired mechanical properties and surface qualities (density, smoothness) to the steel. The mass-based limitations for cold forming operations are based on zero wastewater discharge from welding operations.

- *Continuous Annealing* means a heat treatment process in which steel is exposed to an elevated temperature in a controlled atmosphere for an extended period of time and then cooled. The mass-based limitations for continuous annealing operations include wastewater flow volumes from heat treating operations.

- *Electroplating* means the application of metal coatings including, but not limited to, chromium, copper, nickel, tin, zinc, and combinations thereof, on steel products using an electro-chemical process. The mass-based limitations for electroplating operations includes wastewater flow volumes from acid pickling, annealing, alkaline cleaning, electroplating without chromium or cyanide, and electroless plating operations.

- *Hot Dip Coating* means the coating of pre-cleaned steel parts by immersion in a molten metal bath. The mass-based limitations for hot dip coating operations includes wastewater flow volumes from acid pickling, annealing, alkaline cleaning, chemical conversion coating without chromium, chromate conversion coating, galvanizing, and hot dip coating operations.

- *Lubrication* means the process of applying a substance to the surface of the steel in order to reduce friction or corrosion. The mass-based limitations for lubrication operations includes wastewater flow volumes from corrosion preventive coating operations as defined in 438.61(b).

- *Mechanical Descaling* means the process of removing scale by mechanical or physical means from the surface of steel. The mass-based limitations for mechanical descaling operations includes wastewater flow volumes from abrasive blasting, burnishing, grinding, impact deformation, machining, and testing operations.

- *Painting* means applying an organic coating to a steel bar, rod, wire, pipe, or tube. The mass-based limitations for painting operations includes wastewater flow volumes from spray or brush painting and immersion painting.

- *Pressure Deformation* means applying force (other than impact force) to permanently deform or shape a steel bar, rod, wire, pipe, or tube. The mass-based limitations for pressure deformation operations includes wastewater flow volumes from forging operations and extrusion operations.

The following table lists the PNFs that EPA used in determining the production based limits for this subcategory.

Steel Forming and Finishing Manufacturing Operation	**PNF (gallons/ton)**
Acid Pickling	500
Alkaline Cleaning	500
Cold forming	0
Continuous Annealing	25
Electroplating	1,000
Hot Dip Coating	145
Pressure Deformation	25
Lubrication	12
Mechanical Descaling	2
Painting	65

Step 3. Multiply the concentration-based limit for each regulated pollutant by the appropriate PNF from the table above and apply the conversion factor calculated below to determine the production based limit (lbs/1,000 pounds produced).

$$Limit_{pn} = \frac{Xmg}{L} \times \frac{Ygal}{short\ ton} \times \frac{8.3454\,L \times lb}{10^6\ gal \times mg} \times \frac{short\ ton}{2 \times 1000\,lb} = 0.00000417\,XY\,\frac{lb}{1000\,lb} =$$

$$0.00000417\,XY\,\frac{kg}{kkg}$$

$$conversion\ \ factor = \frac{3.7854\,L}{gal} \times \frac{lb}{453.593 \times 10^3\,mg} = 8.3454 \times 10^{-6}\,\frac{L/gal}{mg/lb}$$

Where X (mg/L) is the Steel Forming and Finishing subcategory concentration and *Y* is the appropriate PNF (gallon/ton).

The production-based limits that EPA calculated for the Steel Forming and Finishing subcategory using the three steps above, are listed in Section 14. In order to develop a production-based limit for a Steel Forming and Finishing subcategory facility, the permit writer or control authority uses the Steel Forming and Finishing limits established by EPA and listed in Section 14 and carries out the following two steps:

Step 4. Determine a reasonable production rate in lbs/day for each of the steel forming and finishing manufacturing operations (see Section 15.2.6 - Estimating Reasonable Production Rates).

Step 5. For each steel forming and finishing manufacturing operation and for each pollutant proposed for regulation, multiply the production based limit (lbs of pollutant/1,000 pounds of product produced) by the production rate (lbs of product/day) to obtain the allowable pollutant discharge (lbs pollutant/day).

15.2.4 Use of Site-Specific Historical Flow Data to Calculate Flow-Based Mass Limitations

Although EPA is not proposing to require permit writers and control authorities to convert the proposed concentration-based limits to mass-based limits, EPA does provide the authority to do so in the proposed rule. In cases where the permit writer or control authority is going to develop mass-based limitations for a site with sufficient pollution prevention and water conservation practices in place, the Agency recommends that the permit writer or control authority use the site's historical process wastewater flow information. Cases may also exist where a facility that incorporates pollution prevention and water conservation practices may request that their permit

limits be mass-based. EPA believes that the use of historical flow to develop the limits is appropriate in these cases as well. The use of historical flow data that reflects pollution prevention and water conservation practices at a site reduces the opportunity for sites to dilute their flow to achieve concentration limits. This approach also encourages sites to evaluate existing and potential pollution prevention and water conservation opportunities.

Historical flow should be calculated as a reasonable estimate of the actual long-term discharge flow rate from a site for sites with sufficient P2 and water conservation practices. To develop a site-specific historical flow rate, permit writers and control authorities should review the site's pollution prevention and water conservation practices as well as long-term records of the site's flow on a monthly basis (e.g., over a 5 year period). Then, to determine the site's flow-based mass-limits, the permit writer/control authority multiplies the flow rate by the concentration limit for each pollutant.

Several documents published by the EPA's Office of Wastewater Enforcement and Compliance, Washington, DC, provide guidance for determining the appropriate process wastewater flow rate (26).

15.2.5 Use of General MP&M Industry Flow Data to Develop Flow-Based Mass Limitations

When sites do not have pollution prevention and water conservation practices in place, the Agency recommends that the permit writer use methods other than historical flow and production data to calculate mass-based limitations. One of these methods uses an estimate of the flow reduction, as a percentage of the current flow, if the site implements pollution prevention and water conservation practices. The other method uses unit-operation-specific PNFs to calculate a maximum combined MP&M flow rate for the entire site. The PNF is the amount of wastewater generated per unit of product manufactured, rebuilt, or repaired and is measured as either gallons per square foot of metal surface area or gallons per ton of metal processed. If the facility's PNF in subsequent operational years remains at or below the PNF that the permit writer or control authority determined to reflect good water use practices, then the facility is likely not diluting to achieve the new MP&M limits.

In order to determine the flow-based mass limits, the permit writer/control authority would multiply a PNF, representative of good water use practices, times an appropriate measure of production (i.e., square feet processed) to get a flow rate. Then, to determine the site's flow-based mass-limits, the permit writer/control authority multiplies the flow rate by the concentration limit for each pollutant.

The data and information contained throughout this section should assist permit writers and control authorities in establishing the flow reductions achieved by pollution prevention practices and in establishing PNFs for MP&M unit operations that reflect good water use practices.

Pollution Prevention and Water Conservation Practices

EPA observed a number of pollution prevention and water conservation practices during site visits and sampling episodes and MP&M surveys provided additional information on these practices. Some of the common pollution prevention and water conservation methods for surface treatment include drag-out tanks, countercurrent rinsing, manual and automatic rinsewater shut-off, timed rinses, flow restrictors, conductivity meters, and in-process ion exchange and water recycle. The table below shows the estimated number of MP&M facilities currently using one or more of these techniques to limit flow.

Estimated Number of MP&M Facilities Using Various Pollution Prevention and Water Conservation Practices to Limit Flow

Flow Control Practice	Number of MP&M Facilities[1]
Two-stage countercurrent rinsing	1,429
Three-stage countercurrent rinsing	745
Manual rinsewater shut-off	2,464
Automatic rinsewater shut-off	426
Timed rinses	777
Flow restrictors	1,581
Conductivity meters	317
Ion exchange and water recycle	347

[1]Estimates of the number of MP&M facilities using the listed flow control practices are based on the 1996 MP&M Detailed Surveys, which represents 4,300 sites. The 1989 survey did not collect this information.

To assist permit writers in estimating if flows from an MP&M facility are excessive or not when the facility does not use pollution prevention and water conservation practices, EPA analyzed flow and production data for various rinse schemes. First, EPA determined the most commonly used rinsing operations from the MP&M detailed surveys. Next, using the flow and production data from each site, EPA calculated PNFs for each rinsing operation. The table below shows the seven most common rinse types reported in the MP&M detailed survey, along with the calculated median PNFs for each rinse type.

Seven Most Common Rinse Types Reported by MP&M Facilities and Median PNFs

Rinse Type	Median PNF (gal/ft^2)	Number of Observations
Two-stage overflow	5.0	2,332
One-stage overflow	2.0	12,867
Spray rinse	1.43	2,563
Drag-out plus one-stage overflow	1.25	1,179
Two-stage countercurrent	1.02	5,761
Three-stage countercurrent	0.44	1,045
Drag-out	0.16	2,156

Source: MP&M 1996 Detailed Surveys.

The data shown in the table above indicate that the most commonly used rinse types are one-stage overflow and two-stage countercurrent. As discussed in Section 9.0, EPA's proposed technologies include two-stage countercurrent rinses as part of the water conservation practices.

Using the median PNFs, EPA calculated the reduction in flow (percent) expected if a facility changed from poor water use rinse types with high PNFs to a two-stage countercurrent rinse type. Applying the percent flow reduction, the permit writer or control authority can estimate the flow rate from the rinsing operation if the facility changed to a two-stage countercurrent rinse (median PNF is 1.02). The table below shows the expected flow reductions for changing from various rinse types to a two-stage countercurrent rinse type.

Flow Reduction Expected After Changing From Various Rinse Types to Two-Stage Countercurrent

Rinse Type	Expected Flow Reduction
Two-stage overflow	79.5 %
One-stage overflow	48.8 %
Spray rinse	28.4 %
Drag-out plus one-stage overflow	18.1 %

Source: MP&M 1996 Detailed Surveys.

Unit Operation PNFs

Permit writers or control authorities can use the PNFs provided in this section as an indicator of water use practices. Table 15-1 presents descriptive statistics for PNFs obtained from the MP&M surveys. For most unit operations, EPA based the PNFs on surface area as the production-normalizing parameter (Table 15-1(a)). For five operations (abrasive jet machining,

electrical discharge machining, grinding, machining, and plasma arc cutting), the mass of metal removed is the production-normalizing parameter (Table 15-1(b)).

Table 15-1 presents the following information for each of the MP&M unit operations:

- Total occurrences in the MP&M survey data (i.e., the number of times the unit operation was reported, regardless of whether flow and production data were available to calculate PNFs);
- Number of source occurrences for which flow and production data were available to calculate PNFs;
- Minimum PNF reported;
- Maximum PNF reported;
- Median PNF reported;
- Mean PNF reported;
- Upper and lower quartile PNF reported; and
- Tenth and ninetieth percentile PNF reported.

The sites that responded to the MP&M surveys have implemented pollution prevention and water conservation practices to varying degrees. Some sites exhibited poor water use practices, while other sites effectively implemented one or more pollution prevention or water conservation practices. As a result, the PNFs in Table 15-1 vary widely, by several orders of magnitude or more in some cases. These results are not surprising, given the drastic effects of pollution prevention and water conservation practices on reducing flow. For example, implementing one practice, such as converting a two-stage overflow rinse to a two-stage countercurrent rinse, can reduce water use by almost 80 percent. Differences in manufactured parts or processing requirements also affect PNFs.

15.2.6 Estimating Reasonable Production Rates

As discussed above, the permit writers or control authorities can use PNFs to calculate flow rates for developing mass-based limits. The PNF can be multiplied by a reasonable production rate (in square feet or pounds of metal removed per day, pounds of product produced per day, etc.) through each unit operation to estimate a flow rate for that unit operation. In the proposed rule, particularly in reference to the Steel Forming and Finishing production-based limits, the Agency is considering four alternatives (A through D) for determining reasonable production rates. Each alternative requires only unit operations that generate or

discharge process wastewater be included in the calculation of production rates. Each of these alternatives is discussed below. In the proposal, EPA is soliciting comment on each alternative for determining reasonable production rates.

Alternative A: This alternative retains the essential requirements of the rule that EPA currently regulates Steel Forming and Finishing facilities under (40 CFR Part 420.04). The alternative requires the permit writer or control authority to use the following protocols:

- For similar, multiple production lines with process waters treated in the same wastewater treatment system, production can be determined from the combined production of the similar production lines during the same time period.

- For process wastewater treatment systems where wastewater from two or more different production lines are commingled in the same wastewater treatment system, production shall be determined separately for each production line (or combination of similar production lines) during the same time period.

This method also avoids calculating unrealistically high production estimates by only considering production from all production units that could occur simultaneously.

Alternative B: The Agency is considering including in the rule a requirement for the permit writer/control authority to establish multi-tiered limits and pretreatment standards. Permit writers and control authorities currently use their best professional judgment for establishing multi-tiered permits. The Agency has issued guidance for use in considering multi-tiered permits (see Chapter 5 of the "U.S. EPA NPDES Permit Writers' Manual," (EPA-833-8-96-003, December 1996) and Chapter 7 of the "Industrial User Permitting Guidance Manual," (EPA 833/R-89-001, September 29, 1989)).

In situations where a single set of effluent limitations or standards are not appropriate for the permit's (or control mechanism's) entire period, a tiered permit/control mechanism may be established. One set of limits would apply for periods of average production along with other sets which take effect when there are significant changes in the average production rate. The guidance notes that a 10 to 15 percent deviation above or below the long-term average production rate is within the range of normal variability. Predictable changes in the long-term production higher than this range would warrant consideration of a tiered or multi-tiered permit/control mechanism. Based on EPA's limited data, the facilities in the Steel Forming and Finishing subcategory may have a variable production rate where the permit/control mechanism modification process is not fast enough to respond to the need for higher or lower equivalent limits.

Alternative C: To provide a basis for deriving a permit/control mechanism production rate that is consistent with the term *reasonable measure of actual production* and that

can be applied consistently for facilities in the Steel Forming and Finishing subcategory, EPA is also considering including a definition of "production" specific to this subcategory. The modified definition for use in developing the permit/control mechanism production basis would be the average daily operating rate for the year with the highest annual production over the past five years, taking into account the annual hours of operation of the production unit and the typical operating schedule of the production unit, as illustrated by the following example:

Highest annual production from previous five years	3,570,000	tons
Operating hours	8,400	hours
Hourly operating rate	425	tons/hour
Average daily operating rate (24 hour day)	10,200	tons/day

The above example is for a unit process that is operated typically 24 hours per day with short-term outages for maintenance on a weekly or monthly basis. For facilities in the Steel Forming and Finishing subcategory that are operated typically less than 24 hours per day, the average daily operating rate must be determined based on the typical operating schedule (e.g., 8 hours per day for a facility operated one 8-hour turn (or shift) per day; 16 hours per day for a facility operated for two 8-hour turns per day). For example:

Highest annual production from previous five years	980,000	tons
Operating hours	4,160	hours
Hourly operating rate	235.6	tons/hour
Average daily operating rate (16 hour day)	3,769	tons/day

In this example, EPA recognizes that the approach could cause problems for a facility that was operated 16 hours/day at the time the permit was issued and then wished to change to 24 hours/day based on unforseen changes in market conditions. To address this issue, the approach could be combined with the tiered permit approach discussed above.

For multiple similar process units discharging to the same wastewater treatment system with one compliance point (e.g., two electroplating lines operated with one treatment system for process waters), the year with the highest annual production over the previous five years under Alternative C would be determined on the basis of the sum of annual production for both electroplating lines. Then, based on this year's average daily operating rate, the daily production rates would be calculated as above independently for each electroplating line using total annual production and annual operating hours for each line. The daily production values would be summed to calculate the average daily operating rate for the combination of the two lines. For example, consider the following production data:

Year	Electroplating Line A (tons)	Electroplating Line B (tons)	Total (tons)
1995	1,859,000	1,305,000	3,155,000
1996	1,675,000	1,425,000	3,100,000
1997	1,760,000	1,406,000	3,166,000
1998	1,580,000	1,328,000	2,908,000
1999	1,825,000	1,380,000	3,205,000

Annual maximum production rates for each electroplating line and the combination of the two lines are underlined. In this example, 1999 was the maximum production year for the combination of the electroplating lines and the data from each line that year would be used to calculate the average daily operating rates. Had the 1995 data from Electroplating Line A and the 1996 data from Electroplating Line B been used in combination (3,275,000 tons), an unrealistic measure of actual production might have resulted if the two electroplating lines could not produce at these high levels concurrently.

In contrast to the previous example, for multiple process units that are not similar, but have process wastewater commingled prior to treatment in one central wastewater treatment system with one compliance point, the year with the highest production over the previous five years would be determined separately for each production unit (or combination of similar and different production units) with the highest annual production. For example, consider a situation where process wastewater for an electroplating line, a pressure deformation operation, and an acid pickling operation are discharged through one compliance point. Consider the following example:

Year	Electroplating (tons)	Pressure Deformation (tons)	Acid Pickling (tons)
1995	575,000	650,000	900,000
1996	650,000	700,000	1,000,000
1997	675,000	850,000	950,000
1998	750,000	825,000	1,125,000
1999	700,000	600,000	900,000

In this example, 1998 production data for the electroplating line, 1997 data from the pressure deformation operation, and 1998 data for the acid pickling operation would be used to develop the effluent limitations or pretreatment standards used in the permit/control mechanism.

Alternative D: The Agency is considering establishing production-based maximum monthly average effluent limitations and standards in combination with daily-maximum concentration-based effluent limitations and standards. Under this alternative, the maximum monthly average NPDES permit and pretreatment control mechanism mass basis requirements would be determined using Steel Forming and Finishing production-based standards listed in Section 14 in combination with a reasonable measure of actual production, such as Alternative C above. However, the daily-maximum requirements would be in the form of effluent concentrations in lieu of the daily-maximum production-based mass effluent limitations guidelines and standards. These daily maximum concentrations set out as effluent limitations guidelines and standards would be based on the long-term averages and variability factors derived from EPA sampling conducted post-proposal at steel forming and finishing facilities representative of BAT.

The Agency believes this approach would effectively address the potential issue cited above regarding short-term peaks in production under most circumstances. There would be no additional burden on the industry and permitting or control authorities for applying for and writing NPDES permits or pretreatment control mechanisms. Permitting and control authorities may need to revise their automated compliance tracking systems to account for both mass and concentration limitations at the same outfall, which is a common feature in many NPDES permits and pretreatment control mechanisms issued prior to this proposal.

When using the appropriate production data and PNFs for conversion of concentration-based limits to mass-based limits, the permit writer or control authority can select an appropriate PNF from Table 15-1 for each unit operation on site. EPA recognizes that in certain subcategories, production by unit operation may not be available (e.g., surface area electroplated for parts that are not standard shapes like door knobs). The Agency also recognizes that different part configurations and processing requirements may result in differing water use requirements, even for multiple occurrences of the same operation at a site. For example, a site manufacturing aerospace components may require a higher PNF for rinsing internal electronic components after electroplating than for rinsing outer casings after electroplating. Because of this diversity, while encouraging the use of lower PNFs, the Agency has provided a distribution of PNFs for each unit operation so that permit writers and control authorities can use a site-appropriate PNF.

While variations in water flow per unit of production result from variations in the part configurations and processing requirements, on-site observations indicate that they are more frequently the result of imprecise or inadequate control of water use. The permitting authority should be aware of additional factors influencing PNFs, and the impact of these factors on the appropriate PNF for an operation at a site. Sections 15.3 through 15.5 provide additional guidance on determining the appropriate PNFs for the major MP&M wastewater-generating unit operations.

15.2.7 Monitoring Flexibility

EPA is proposing several flexible monitoring alternatives to reduce burden on MP&M facilities and permit writers/control authorities. This section discusses the monitoring waiver for pollutants that are not present, monitoring for organic pollutants, and monitoring for cyanide. The proposed rule also discusses several other possible monitoring alternatives that were not proposed but are being considered for the final rule (i.e., site-specific correlation for an organic pollutant indicator parameter, pretreatment sulfide monitoring waiver, and a pollution prevention alternative).

Monitoring Waiver for Pollutants Not Present

In an effort to reduce monitoring burden on facilities, EPA is proposing to allow MP&M indirect discharge facilities to apply for a waiver that would allow them to reduce their monitoring burden. In order for a facility to receive a monitoring waiver, the facility would need to certify in writing to the control authority (e.g., POTW) that the facility does not use, nor generate in any way, a pollutant (or pollutants) at its site and that the pollutant (or pollutants) is present only at background levels from intake water and without any increase in the pollutant due to activities of the discharger. The facility would need to base this certification on sampling data or other technical factors. For example, if a site does not use or generate cyanide on-site they could submit a written certification and would not have to monitor for cyanide to demonstrate compliance with the MP&M limits.

The certification would not be a waiver from the pollutant numerical limit in the control mechanism (i.e., permit). It would only be a waiver from the monitoring requirements. EPA is proposing that the certification statement be submitted at the same time indirect discharging MP&M facilities submit “periodic reports on continued compliance” as directed by the General Pretreatment Standards (40 CFR 403.12(e)). Indirect dischargers submit such reports twice per year (typically June and December). In addition, the certification would need to be signed by the same individual that is authorized to sign the periodic reports as described in the General Pretreatment Standards 403.12(l). In addition, EPA would still require the industrial user to monitor for the specified pollutants as part of the Baseline Monitoring Report (403.12(b)) and the 90-day Compliance Report (403.12(d)). EPA believes control authorities can use the sampling data generated from the Baseline Monitoring Report and the 90-day Compliance Report in conjunction with technical information on the raw materials and chemical processes used at the facility to determine whether there is sufficient reason to allow the monitoring waiver for any of the MP&M limited pollutants. This monitoring waiver would be similar to the waiver in the Proposed “Streamlining the General Pretreatment Regulations for Existing and New Sources of Pollution,” 64 FR 39564; July 22, 1999 (commonly referred to as “Pretreatment Streamlining”) and the waiver that was finalized for direct discharges in the “Amendments to Streamline the NPDES Program Regulations: Round Two (65 FR 30886; 5/15/00).

Monitoring Alternatives for Organic Pollutants

To reduce the burden associated with monitoring for organic pollutants, EPA has decided to propose three alternatives to allow for maximum flexibility while ensuring reductions in the amount of organic pollutants discharged from MP&M facilities. In most subcategories, EPA is proposing to require MP&M facilities within the scope of the rule to either: (1) meet a numerical limit for the total sum of a list of specific organic pollutants called “Total Organics parameter “ or “TOP” (similar to the TTO parameter used in the Metal Finishing effluent guidelines); (2) meet a numerical limit for total organic carbon as an indicator parameter; or (3) develop and certify the implementation of an organics management plan. Each of these alternatives is discussed below.

For the first alternative, EPA is proposing an approach similar to the one used in the Metal Finishing Effluent Guidelines (40 CFR Part 433). EPA developed the TOP list, using the list of organic priority pollutants and other nonconventional organic pollutants that met EPA's "pollutant of concern" criteria for this rule. Of the non-conventional organic chemicals on the MP&M pollutant of concern list, EPA included only those that were removed in appreciable quantities by the selected technology option (based on toxic weighted pound-equivalents) in two or more subcategories. EPA then derived a numerical limit for TOP based on the contribution of each of the organic pollutants described in Section 7 using the data collected during sampling and determined its limitation using the statistical methodology outlined in Section 10. Facilities will only have to monitor for those TOP chemicals that are reasonably present. (See discussion on monitoring waiver for pollutants not present).

For compliance purposes, pollutants that have been given a waiver (because they are not reasonably present) will be counted as zero in the TOP limit. For remaining pollutants, the reported value, when above the detection limit, shall be used in the TOP calculation. When a pollutant is reported as a “non-detect” (i.e., not found above the nominal quantitation limit), the nominal quantitation value shall be used in the TOP calculation. (Pollutant parameters not detected in any samples collected during the MP&M sampling program are shown in Table 7-2.)

The second alternative proposed by EPA to lessen the monitoring burden is the use of an indicator parameter (ie., total organic carbon) to measure the presence of organic pollutants in MP&M process wastewater. EPA chose TOC as an indicator parameter because of its ability to measure all types of organic pollutants. EPA found TOC to be the best general indicator parameter for measuring the sum of organic compounds in a wastestream. (See DCN 16028 in Section 6.3 of the Public Record).

Finally, EPA is proposing a third alternative to reduce monitoring burden – the use of an organic pollutant management plan. The organic pollutant management plan would need to specify, to the satisfaction of the permitting authority or control authority, the toxic and non-conventional organic constituents used at the facility (not only those on the TOP list); the disposal method used; the procedures in place for ensuring that organic pollutants do not routinely spill or leak into the wastewater or that minimize the amount of organic pollutants used

in the process; the procedures in place to manage the oxidation reduction potential (ORP) during cyanide destruction to control the formation of chlorinated organic byproducts; and the procedures to prevent the over dosage of dithiocarbamates when treating chelated wastewater. Facilities choosing to develop an organic pollutant management plan would need to certify that the procedures described in the plan are being implemented at the facility.

Monitoring Alternatives for Cyanide

For the General Metals, Metal Finishing Job Shop, Printed Wiring Board, and Steel Forming and Finishing subcategories, EPA is proposing to set a total cyanide limit. The point of compliance would be based on monitoring for total cyanide directly after cyanide treatment, before combining the cyanide treated effluent with other wastestreams. EPA is also proposing an alternative where a facility may take samples of final effluent, in order to meet the total cyanide limit, if the permitting/control authority adjusts the limit based on the dilution ratio of the cyanide wastestream flow to the effluent flow.

In addition, EPA has selected alkaline chlorination using sodium hypochlorite as the best available economically achievable technology for treating cyanide bearing wastewater from MP&M facilities. Not all cyanide however is amenable to alkaline chlorination due to "unavoidable" complexing with other compounds at the process source of the cyanide-bearing wastestreams. EPA believes that for some facilities it may be more accurate to monitor for the portion of cyanide in their wastewater that is amenable to alkaline chlorination than to measure total cyanide which may include cyanide complexes that this technology is not likely to treat. Therefore, EPA is also proposing an alternative "amenable cyanide" limit for each of these subcategories which a facility may use directly after cyanide treatment (e.g., before combining the cyanide treated effluent with other wastestreams).

The Agency proposes to allow the use of the amenable cyanide limit upon the agreement of the facility and its permit writer or control authority (e.g., POTW). However, when segregated cyanide treatment is in place as a preliminary step prior to commingling wastewater for chemical precipitation, EPA is proposing to allow the amenable cyanide alternative limit to be measured at the end-of-pipe (i.e., final effluent) if the control authority adjusts the permit limits based on the dilution ratio of the cyanide wastestream flow to the effluent flow.

If facilities are not using cyanide destruction treatment on cyanide-bearing wastestreams prior to commingling with metal-bearing streams, additional complexing can occur. This additional complexing would render the cyanide "non-amenable" when it would otherwise be amenable to alkaline chlorination. EPA considers such complexing to be "avoidable"and would not allow the use of end-of-pipe monitoring for amenable cyanide when in-process cyanide destruction is not performed.

15.3 Flow Guidance for Surface Treatment Rinsing Operations

Surface treatment rinses include those following acid and alkaline treatment, anodizing, electroplating, electroless plating, and chemical conversion coating. Rinsing dilutes and removes the chemical film of drag-out remaining on parts and racks after processing in a chemical bath. This subsection presents guidance for selecting the appropriate flow rate from surface treatment rinsing operations for sites that do not have pollution prevention and water conservation practices in place. EPA based the guidance on MP&M survey data, site visits, and technical literature on various factors that impact rinse-water requirements, such as drag-out rates and the required cleanliness or quality of rinse water.

Section 15.3.1 provides background information to identify pollution prevention and water conservation practices applicable to surface treatment rinsing operations and evaluation criteria to assess if a particular site has properly implemented these practices. Section 15.3.2 shows the influences on flow rates from surface treatment rinsing operations. Section 15.3.3 presents guidance for PNF selection.

15.3.1 Identification of Sites With Pollution Prevention and Water Conservation Practices

As discussed in Section 15.1, the Agency recommends that permit writers or control authorities use historical flow data to calculate mass-based limitations, when needed, for sites that have implemented pollution prevention and water conservation practices. This subsection provides background information and guidance that the permit writer or control authority can use to determine if a site has implemented pollution prevention and water conservation practices. If the site has implemented these types of practices, the permit writer can multiply the site's historical process wastewater discharge flow rate by the subcategory-specific concentration-based limitations to calculate mass-based limitations. This eliminates having to identify alternate methods to develop mass-based limitations, including tracking production rates through unit operations.

Many MP&M sites use some form of water conservation. Some sites implement numerous water conservation methods and technologies in combination that result in very low rinsewater discharge rates and in some cases eliminate the discharge of rinse water from individual processes. Water conservation is applicable to every flowing rinse; however, process-related factors and site-specific conditions may restrict the use of certain methods. This subsection identifies pollution prevention and water conservation practices and technologies applicable to surface finishing rinses, presents example configurations of these practices and technologies at MP&M sites, and provides guidance on how to evaluate a site's water use practices.

Pollution Prevention and Water Conservation Practices for Surface Treatment

The Agency identified four categories of pollution prevention and water conservation practices and technologies that can be applied to reduce rinse-water use: drag-out reduction and/or drag-out recovery methods; improved rinse tank design and innovative rinsing configurations; rinse-water use control devices; and, metal recovery and rinse-water reuse technologies. In addition to conserving water use, some of these methods (especially those that affect drag-out and recover chemicals) also conserve raw materials and reduce treatment reagent requirements and sludge production. Within each of these categories are several specific practices and technologies. Table 15-2 presents examples of these practices and technologies, as well as their applicability to the MP&M unit operations. Table 15-3 provides definitions of these practices.

Drag-Out Reduction and Drag-Out Recovery. The quantity of water needed for good rinsing for a given system is proportional to the quantity of drag-out from a process bath. Sites can implement various methods that minimize the rate of drag-out (measured as gallons per square foot of part surface area) and/or they can implement direct drag-out recovery. The drag-out rate for an individual process operation (e.g., cleaning or plating) depends on numerous factors, including process type, shape of parts processed, production equipment, and processing procedures, which include human factors. Of these factors, the shape of the parts and the type of device used to move the parts (e.g., racks, baskets, barrels) usually have the greatest influence on drag-out rates. The following tables present drag-out rate estimates for various shaped parts.

Estimates of Drag-Out Generation Presented in Literature
Average Drag-Out Losses - from Soderberg's Work

Nature of Work Drainage	Drag-Out Rate (gal/1,000 ft^2)
VERTICAL	
Well drained	0.4
Poorly drained	2.0
Very poorly drained	4.0
HORIZONTAL	
Well drained	0.8
Very poorly drained	10.0
CUP SHAPES	
Well drained	8.0
Very poorly drained	24.0

Source: Reference 1.

Average Drag-Out Losses - from Hogaboom's Work

Electroplating Solution Type	Drag-Out Rate (gal/1,000 ft^2)	
	Flat Surfaces	Contoured Surfaces
Brass	0.95	3.3
Cadmium	1.00	3.1
Chromium (33 oz/gal)	1.18	3.0
Chromium (53 oz/gal) [a]	4.53	11.9
Copper cyanide	0.91	3.2
Watts nickel	1.00	3.8
Silver	1.20	3.2
Stannate tin	0.83	1.6
Acid zinc	1.30	3.5
Cyanide zinc	1.20	3.8

Source: Reference 1.
[a]Increased viscosity, caused by an increase in concentration, can increase the drag-out volume approximately three times with less than double the concentration increase.

Soderberg's data indicate that the shape of the part has a significant influence on drag-out rate. Cup-shaped parts, including intricately designed parts with internal surfaces, can generate five or more times the drag-out than flat surfaced parts with the same surface area. Hogaboom's data show a similar trend for flat versus contoured surfaces. These data also show that the type and concentration of the electroplating solution influence the drag-out rate. For example, some solutions, such as stannate tin, drain effectively, while others, such as concentrated chromium electroplating solutions (53 oz/gal) drain poorly. As to the type of device used to move parts, barrels (used to hold fasteners or other small parts that cannot be practically held by racks) generate more drag-out than racks, because of the surface area of the barrel and its tendency to hold the solution.

The drag-out rate for a given process and part is influenced by several factors other than shape, some of which are interrelated. Table 15-4 lists these and other key factors and describes their impact on drag-out rates. Also listed are examples of water conservation practices that reduce the generation of drag-out, and the major restrictions that are associated with these practices. The following table shows the effect of altering the withdrawal rate and drain time.

Effect of Withdrawal Rate and Drain Time on Drag-out Rate[a]

Micro-Etch Results	Withdrawal Rate (ft/min)	Time of Withdrawal (seconds)	Drain Time (seconds)	Total Time (seconds)	Drag-out (gal/1,000 ft^2)
Baseline	100	1.7	3.4	5.1	3.13
Slower rate of withdrawal	11	14.9	2.5	17.4	1.73
Intermediate withdrawal rate and longer drain time	40	4.3	12.1	16.4	1.83

Electroless Copper Results	Withdrawal Rate (ft/min)	Time of Withdrawal (seconds)	Drain Time (seconds)	Total Time (seconds)	Drag-out (gal/1,000 ft^2)
Baseline	94	1.8	5.2	7.0	1.55
Slower Rate of Withdrawal	12	13.9	3.2	17	0.78
Intermediate Withdrawal Rate and Longer Drain Time	40	4.3	11.9	16.3	0.75

Source: Reference 1.

[a]The effects of changing the withdrawal rate and drain time were measured at a printed circuit board manufacturing site.

The following is a list of drag-out reduction practices that can be implemented on electroplating or surface finishing lines:

- Lower process solution viscosity and/or surface tension by lowering chemical concentration, increasing bath temperature, or using wetting agents;
- Reduce drag-out volume by modifying rack/barrel design and perform rack maintenance to avoid solution trapping;
- Position parts on racks in a manner that avoids trapping solution;
- Reduce speed of rack/barrel withdraw from process solution an/or increase dwell time over process tank;
- Rotate barrels over the process tank to improve drainage;
- Use spray/fog rinsing over the process tank (limited applicability);

- Use drip boards and return process solution to the process tank;
- Use drag-out tanks, where applicable, and return solution to the process tank; and
- Work with customers to ensure that part design maximizes drainage;

EPA believes that facilities must implement three or more drag-out reduction practices or use at least one drag-out recovery technology to have good water use practices.

Improved Rinse Tank Design and Innovative Configurations. Rinse tank design and rinsing configuration greatly influence water usage. The key objectives for optimal rinse tank design are to quickly remove drag-out from the part and completely disperse the drag-out throughout the rinse tank. Achieving these objectives reduces the time necessary for rinsing and minimizes the concentration of contaminants on the part when it leaves the rinse tank. Examples of good design include locating water inlet and discharge points of the tank at opposite positions in the tank to avoid short-circuiting, and using air agitation for better mixing (2).

Various rinsing configurations are used in the MP&M industry. Having single-rinse tanks following each process tank is the most inefficient use of rinse water. Multiple-rinse tanks connected in series (i.e., countercurrent cascade rinse) reduces the water needs of a given rinsing operation by one or more orders of magnitude. Spray rinsing can also reduce water use requirements, but the achievable percent reduction is usually less than for countercurrent cascade rinses. Other configurations that reduce water use include cascade, reactive, and dual purpose rinses.

Rinsewater Use Control. Regardless of the type of rinsing configuration they use, facilities can reduce their water use by coordinating water use and water use requirements. Matching water use to water use requirements can optimize the quantity of rinse water used for a given work load and tank arrangement (2). Not controlling water use negates the benefits of using multiple rinse tanks or other water conservation practices and increases water usage.

EPA believes that facilities should implement at least one effective method of water use control on all electroplating or surface finishing lines. Effective water use controls include, but are not limited to:

- Use of softened or deionized water for rinsing;
- Flow restrictors (flow restrictors as a stand-alone method of rinse water control are only effective with plating lines that have constant production rates, such as automatic plating machines. For other operations, there must also be a mechanism or procedure for stopping water flow during idle periods.);

- Conductivity controls;
- Timer rinse controls; and
- Production-activated controls (e.g., spray systems activated when a rack or barrel enters/exits a rinse station).

Metal Recovery and Rinsewater Reuse Technologies. MP&M sites use various technologies to recover metals drag-out and rinses and reuse the rinsewater. The technologies most commonly used to do this are evaporation, ion exchange, electrolytic recovery (also referred to as electrowining), reverse osmosis, and electrodialysis (see Table 15-3 for definitions). The following table presents examples of metal recovery technologies and the drag-out/rinses to which they are primarily applied.

Examples of Metal Recovery Methods

Chemistry or Process with Which Rinse is Associated	Recovery Technology
Brass electroplating	Electrolytic recovery, evaporation
Cadmium (cyanide) electroplating	Electrodialysis, electrolytic recovery, evaporation, ion exchange, reverse osmosis
Cadmium (noncyanide) electroplating	Electrodialysis, electrolytic recovery, evaporation, ion exchange, reverse osmosis
Chromate conversion coating of aluminum	Evaporation
Chromium (hard) anodizing	Evaporation, mist eliminator
Chromium electroplating - decorative (Cr+6)	Evaporation
Chromium electroplating - decorative (Cr+3)	Evaporation
Copper (cyanide and sulfate) electroplating	Electrolytic recovery, evaporation, ion exchange, reverse osmosis
Gold electroplating	Electrolytic recovery, ion exchange
Lead-tin electroplating	Evaporation, ion exchange
Nickel electroplating	Electrodialysis, electrolytic recovery, evaporation, ion exchange, reverse osmosis
Nickel electroless plating	Evaporation, ion exchange
Nickel sealant	Reverse osmosis
Silver electroplating	Electrolytic recovery, evaporation, ion exchange
Zinc (cyanide) electroplating	Electrolytic recovery, evaporation, reverse osmosis
Zinc (non-cyanide) electroplating	Electrolytic recovery, evaporation, ion exchange, reverse osmosis

Chemistry or Process with Which Rinse is Associated	Recovery Technology
Zincate	Evaporation

Source: Reference 2.

Summary of Water Conservation Methods. Figures 15-2(a) through (f) present six examples of rinsing configurations with increasingly good levels of water use practices. Each of these rinse systems is described below. These configurations can be operated to provide adequate rinsing and are common at MP&M sites. However, the quantity of water needed to meet the same rinsing criteria may vary by as much as two orders of magnitude from the lowest level to the best level of water use. The proposed MP&M effluent limitations guidelines and standards are based on flow control and countercurrent cascade rinses for all flowing rinses.

Figure 15-2a is an example of inefficient water use. This configuration uses a single-rinse tank with either continuous water flow or manual use control. To coordinate rinsewater needs and use, the operator must manually turn on the water valve to give the correct flow rate and then turn it off when the flow is no longer needed. The flow-rate setting will usually vary by operator and the water valve may be left open during idle production periods. The single rinse tank configuration uses rinsewater at a very high rate, even if water use is coordinated with the introduction of drag-out. In the example shown, with a 1-gallon-per-hour (gph) drag-out rate, the rinsewater requirement is 30 gallons per minute, based on rinsing of Watts nickel plating solution and a rinsing criterion of 50 mg/L nickel. If water use and drag-out introduction are not coordinated, an even higher rinsewater use rate would be needed to meet a given rinse criterion.

Figure 15-2b shows a rinsing configuration where simple rinsewater reduction methods have been implemented. The water use is still inefficient because a single rinse tank is used versus multiple rinse tanks. However, with this configuration, the drag-out rate is reduced by controlling the withdrawal rate of the part and by holding the part over the process tank to permit the drag-out to drip into the tank. The rinsewater flow rate is controlled at a constant flow by a flow restrictor. The flow restrictor is usually sized to provide adequate rinsing at all times, and is more acceptable for constant production rates, such as those often found with automated plating machines. However, this configuration is inefficient when the work is intermittent because the rinsewater flow rate must be set high enough to provide adequate rinsing during peak production periods. In addition, a large quantity of rinsewater is wasted during low or idle production periods, unless the water flow is manually stopped.

Figure 15-2c shows a rinsing configuration using multiple rinse tanks, which provides a moderately efficient use of water. This configuration is referred to as parallel rinsing, where each of the two rinse tanks are fed with fresh water and they each discharge to treatment. This arrangement can reduce water use to less than 50 percent of that used in Figure 15-2a.

Figure 15-2d shows a more efficient rinsing configuration. This configuration is similar to that shown in Figure 15-2c, except that wastewater from the second rinse tank flows back into the first rinse tank to provide more efficient rinsing with less water use. Wastewater from the first rinse tank is then discharged to treatment. In this configuration, known as countercurrent cascade rinsing, the rinsewater flows in a direction opposite to the part flow. This arrangement can reduce water use by more than 90 percent over the rinse configuration in Figure 15-2a.

Figure 15-2e shows a very efficient rinsing configuration. There are three key elements to this rinse system: drag-out reduction/recovery; countercurrent cascade rinsing; and water-use control. This configuration reduces/recovers drag-out by controlling the withdrawal rate and dwell time and by installing a drag-out recovery tank. This tank can reduce the drag-out entering the countercurrent cascade rinses by up to 90 percent, depending on the surface evaporation rate of the process tank. A conductivity controller controls the feed to the countercurrent cascade rinses. This type of device coordinates water use with drag-out introduction and reduces the influence of human error found with manually controlled rinses. An alternative device is a timer rinse control, which is as effective as a conductivity controller when there is no variability in drag-out volume between rinsing events.

Figure 15-2f shows a rinse system that uses an ion exchange/electrolytic recovery unit as a chemical recovery and water recycling technology. This rinsing configuration can reduce water use by more than 99 percent compared to the rinse configuration in Figure 15-2a, since wastewater is discharged only from the regeneration cycle of the ion-exchange unit.

Evaluating Rinse Water Use at a Site. To identify sites with pollution prevention and water conservation practices in place for rinsing operations, a permit writer or control authority should determine if a facility has implemented three or more of the elements of good rinse system design listed below on all electroplating or surface finishing lines:

- Select the minimum size tank in which the parts can be rinsed and use the same size for the entire plating line, where practical;
- Locate the water inlet and discharge points of the tank at opposite positions in the tank to avoid short-circuiting or use a flow distributor to feed the rinse water evenly;
- Use air agitation, mechanical mixing, or other means of turbulence;
- Use spray/fog rinsing (less effective with hidden surfaces);
- Use multiple rinse tanks in a counter-flow configuration (i.e., counter-current cascade rinsing); and

- Reuse rinse water multiple times in different rinse tanks for succeeding less critical rinsing.

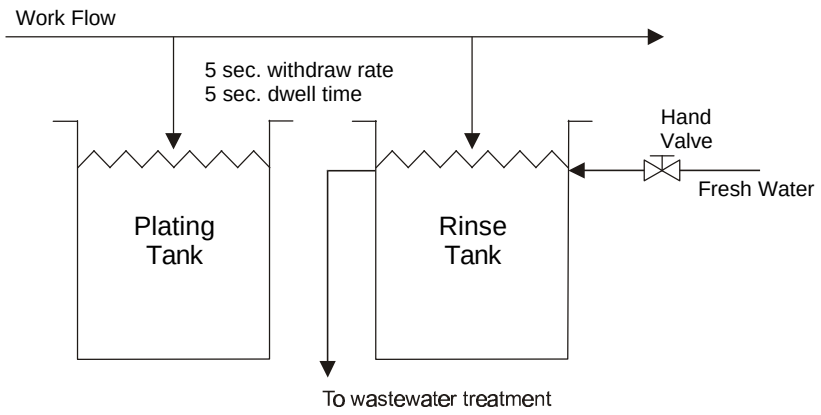

Figure 15-2a. Single Rinse Tank

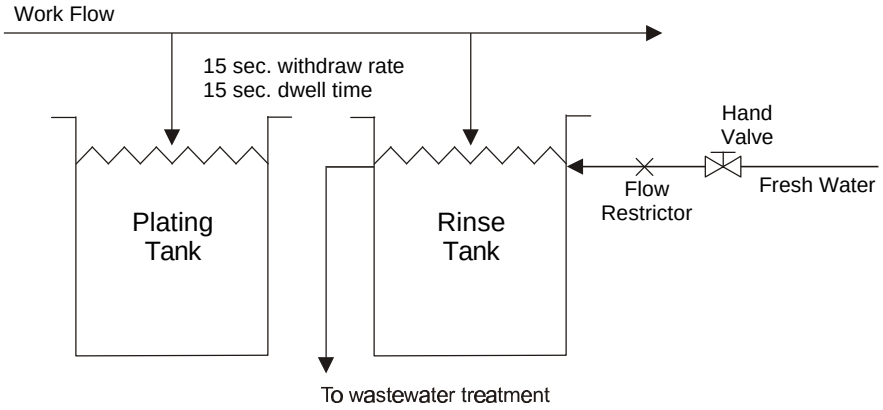

Figure 15-2b. Single Rinse Tank with Flow Reduction

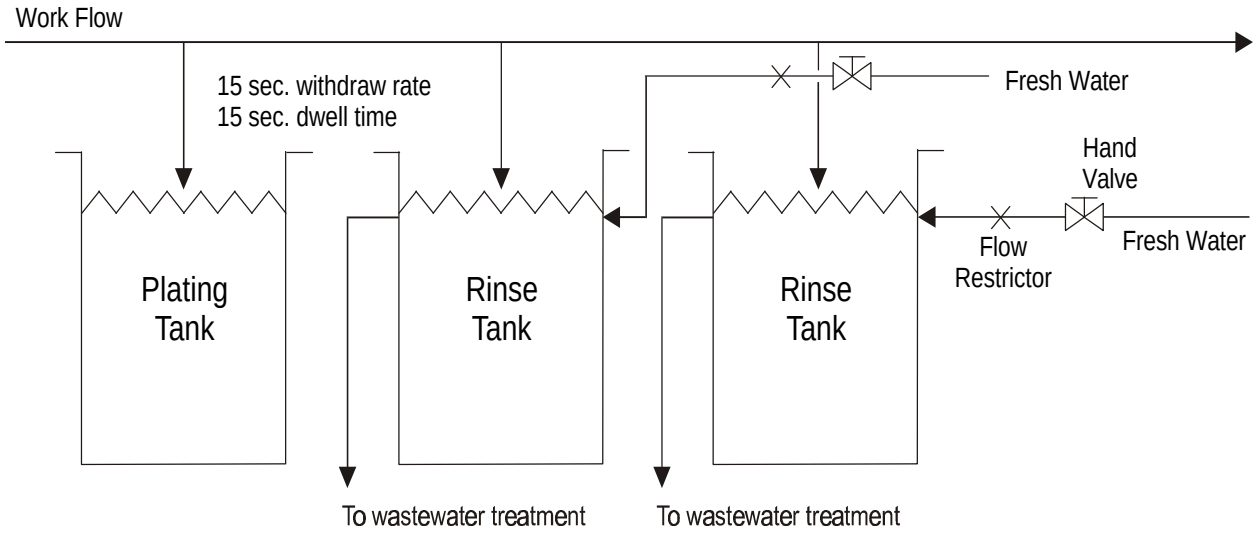

Figure 15-2c. Multiple Rinse Tanks with Flow Reduction

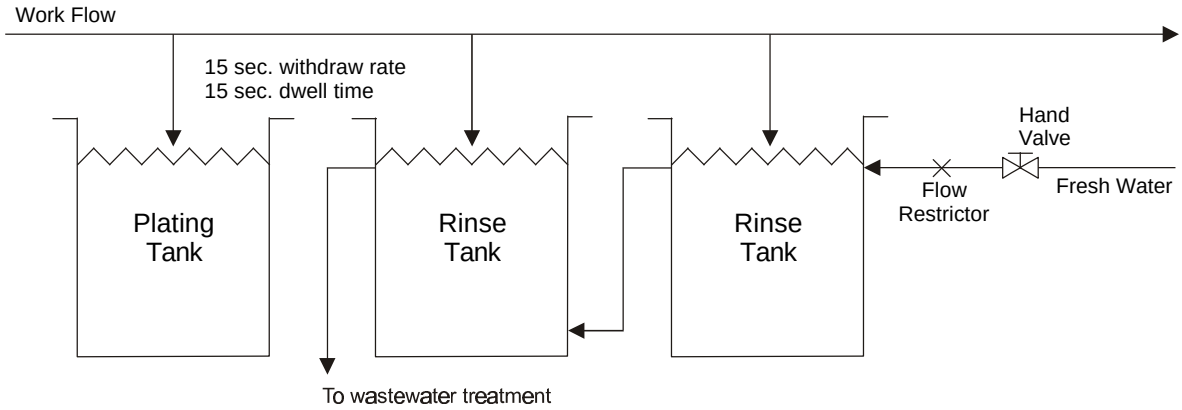

Figure 15-2d. Countercurrent Rinsing with Flow Reduction

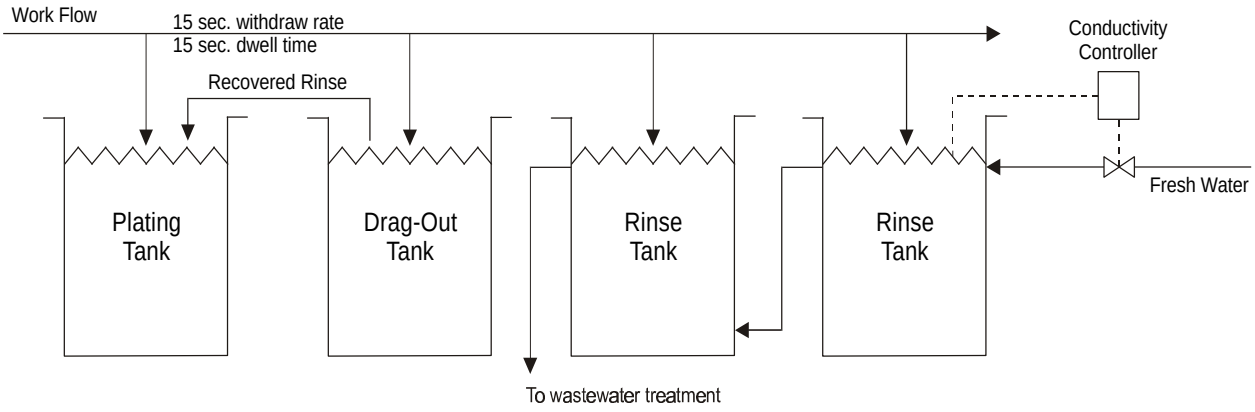

Figure 15-2e. Multiple Rinse Tanks with Flow Reduction and Drag-Out Recovery

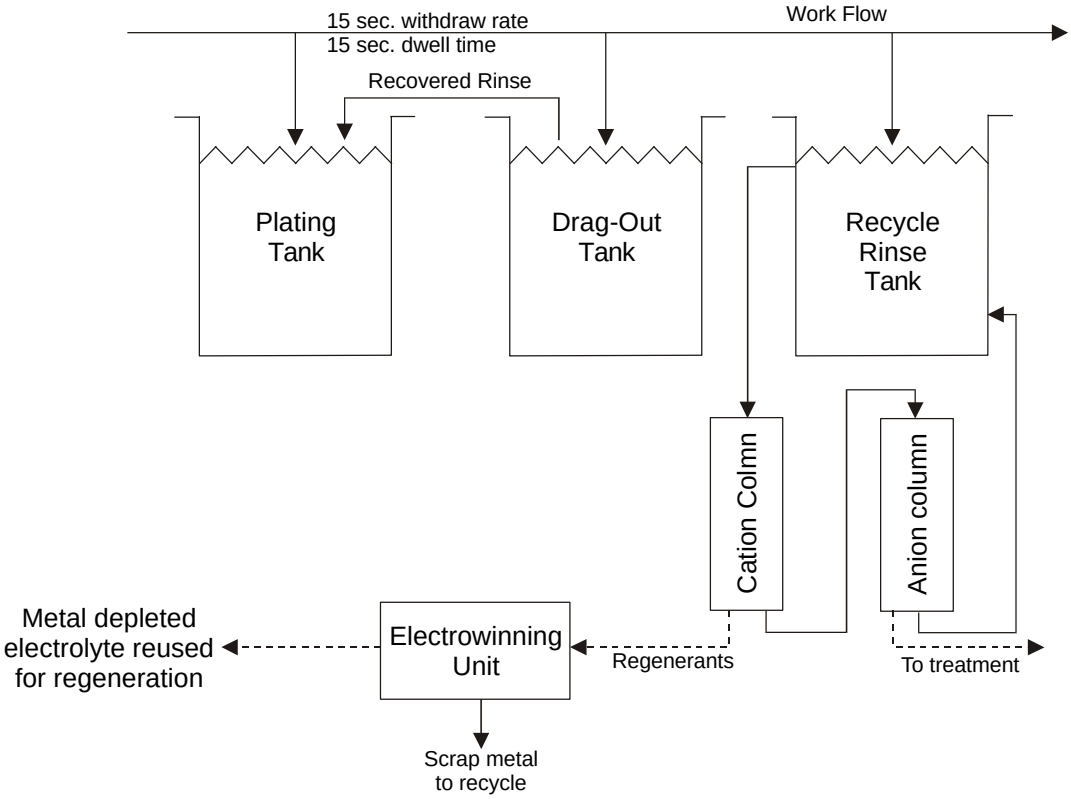

Figure 15-2f. Multiple Rinse Tanks with Water Recycle, Drag-Out Recovery, and Metal Recovery

Table 15-2 presents examples of additional practices and technologies that sites can implement to satisfy these criteria. Although most sites that implement these practices will conserve moderate to large amount of water, it is possible that excess water will still be used. If a permit writer or control authority suspects that excessive water is being used, they can verify this assumption by measuring the cleanliness or quality of the rinse water in the final rinse tanks by using a conductivity meter or by performing an analysis of total dissolved solids (TDS). See Section 15.3.2 for a listing of normal ranges of TDS for adequate rinsing. If the conductivity or TDS of a given rinse is lower than that of an industry-accepted criterion, then the facility may be using excessive water.

15.3.2 Influences on Flow Rates

Available data show that rinsewater-use rates are related to production when measured in terms of the surface area of parts processed. Other factors that influence rinsewater use rates include the drag-out rate (gallons per 1,000 square feet of workload), the rinsewater purity criteria (mg/L TDS or conductivity), the concentration of TDS in the bath (mg/L TDS), rinse tank design and configuration (e.g., single overflow rinse versus countercurrent cascade rinse), and the type of rinsewater flow control (e.g., manual versus conductivity controlled). Section 15.3.1 discusses drag-out rinse tank design and configuration, and rinsewater flow control. The other factors are discussed below.

Rinsewater Purity Criteria. Rinsewater purity criteria are the levels of tolerable contamination in the rinsewater. These levels vary for different processes and types of products. For example, rinsewater used after cleaning typically does not have to be as pure as rinsewater used following plating, since rinsewater that remains on the plated part (essentially the drag-out from the rinse tank) will leave spots after it evaporates if the concentration of dissolved solids in the rinsewater is too high. Although preliminary and intermediate processing steps such as cleaning and etching usually do not require as pure a rinsewater as final rinsing, the rinse water needs to be pure enough to stop chemical reactions (e.g., etching) and prevent the contamination of subsequent process solutions. Among plating processes, differences also exist in rinsewater quality requirements. Parts plated for engineering or functional purposes (e.g., corrosion resistance) can often be rinsed in water that is significantly less pure than decoratively plated parts rinses.

High-purity water is needed for various rinsing operations. In some cases (e.g., electronics parts rinsing), tap water is not pure enough to serve as rinsewater. Before use as rinsewater for this type of operation, the source water is purified by reverse osmosis and/or ion exchange to remove dissolved solids and other constituents. Source water is sometimes treated even for common rinsing operations, especially when the water supply is high in dissolved solids.

The metal finishing industry has had rinsewater quality requirements for decades. They are typically expressed in mg/L of TDS or in conductivity or resistivity units (resistivity is the inverse of conductivity). The following table summarizes some generalized rinse criteria found in the literature (1).

Generalized Rinse Criteria

Type of Rinse	Normal Range for Adequate Rinsing (mg/L TDS)
Alkaline Treatment/Acid Treatment Rinse	400 to 1,000
Functional or Engineering Plating Rinse	100 to 700
Decorative or Bright Plating Rinse	5 to 40

Source: Reference 1.

Permit writers or control authorities can use these criteria as a tool to assess water use practices at a given site.

Bath Concentration. The concentration of a bath (which can be expressed in g/L TDS) will affect the quantity of water needed for good rinsing. Baths that are more concentrated (i.e., higher TDS) will require more rinsewater to meet the same rinsewater purity criteria as a less concentrated bath. The bath concentration depends on the type of bath. For example, a typical acid zinc electroplating bath will have a TDS concentration of 166 g/L and a typical copper cyanide electroplating bath will have a TDS concentration of 250 g/L (3,4). For equal volumes of drag-out from these two baths, the copper cyanide rinse flow must be 1.5 times greater to achieve the same rinse quality criteria (i.e., 250/166 = 1.5). This calculation does not account for the differences in viscosity that will also affect the volume of drag-out. For example, for flat surfaces, the drag-out rate for a 396-g/L chromic acid bath is 3.8 times greater than that of a 247-g/L bath (3,4). In some cases, the TDS concentration of the bath inadvertently increases due to a buildup of bath contaminants (e.g., iron may accumulate in a chromic acid bath due to the attack of the base metal). The TDS added by the contaminants may affect the drag-out rate in the same manner as its intended bath constituents (e.g., chromic acid). Therefore, operating a bath at the lowest concentration necessary to perform the job properly and maintaining bath contaminants at low levels is a significant pollution prevention measure.

15.3.3 Guidance for PNF Selection

The PNF has a significant impact on the maximum allowable process water flow. Due to the number of product/process variables that influence the PNF, permit writers or control authorities may select different PNFs for different sites, or different PNFs for different occurrences of the same operation within a site. The purpose of this section is to present available data and information to support the permit writer or control authority in determining an appropriate water-conserving PNF for an operation. The data sources are the MP&M surveys, technical literature, and the MP&M sampling program.

Most sites should be able to achieve PNFs at the lower end of the ranges presented in Table 15-1 when countercurrent cascade rinsing is implemented. Sites that are unable to implement countercurrent cascade rinsing (e.g., due to space limitations in a plating line) can usually reduce their water use by implementing other flow reduction techniques (e.g.,

ion-exchange recycling for electroplating rinses, flow restrictors combined with conductivity meters for other rinses). EPA included water-conserving practices in evaluating the cost impacts of regulation for sites affected by the proposed MP&M effluent guidelines. Section 11 discusses estimated compliance costs.

Certain specific conditions may affect a site's ability to reduce its water use. The drag-out rate may be higher than average or the rinsewater purity criteria may be lower than average. Guidance for identifying such conditions is presented below.

A conservative estimate of an average drag-out rate is 3.2 gallons/1,000 square feet of surface area (1). Higher drag-out rates may require greater rinsewater flows to achieve good rinsing. An accurate method of drag-out measurement is to track the concentration of a metal ion (or other sufficiently concentrated ion) in the rinse tank through a rinsing event. The facility can use the rise in concentration of the ion in the rinse tank to calculate the volume of process fluid introduced during the rinse if the concentration of that ion in the process fluid is known.

For example, a sample of a copper sulfate process bath is collected and analyzed for copper concentration along with two rinse samples--one before and one after a rinsing event. The drag-out volume for the rinsing event is:

$$D = \frac{(C_{after} - C_{before})}{C_p} \times V_r \qquad \textbf{(15-3)}$$

where,

C_{after}	=	Concentration of selected metal ion in rinse tank after rinsing event (g/L)
C_{before}	=	Concentration of selected metal ion in rinse tank before rinsing event (g/L)
C_p	=	Concentration of selected metal ion in the process tank (g/L)
V_r	=	Volume of rinse tank in liters (L); and
D	=	Volume of drag-out in liters (L).

Several data points should be collected. Once a drag-out rate per unit area is derived, the PNF for the rinse system is:

$$PNF = \frac{(P / D)}{C_{r(ave)}} \times C_{p(ave)} \qquad \textbf{(15-4)}$$

where,

P	=	Production rate (ft^2);
D	=	Drag-out rate (L);

$C_{r(ave)}$	=	Average target metal ion concentration in rinse tank (g/L);
$C_{p(ave)}$	=	Average target metal ion concentration in process tank (g/L); and
PNF	=	Production-normalized flow (L/ft^2).

Drag-out also can be measured using only a conductivity meter, by observing the effect that a controlled amount of process fluid has on the conductivity of a unit volume of rinsewater, and then applying these data to an actual rinsing event.

For example, the conductivity of one liter of fresh rinsewater should be measured, then again after adding and thoroughly mixing 1 milliliter of process fluid. The difference between the two measurements should be noted. Then the conductivity of a rinse tank should be measured prior to and after a rinsing event. The flow through the rinse tank must be closed during the test. The drag-out volume, in liters, for the rack or barrel and parts that were rinsed is:

$$D = \frac{(C_{after} - C_{before})}{C_{mix} - C_r} \times V_r \qquad \textbf{(15-5)}$$

where,

C_{after}	=	Conductivity in rinse tank after rinsing event;
C_{before}	=	Conductivity in rinse tank before rinsing event;
C_{mix}	=	Conductivity in mixture of 1 ml of process fluid and 1 liter of fresh rinsewater;
C_r	=	Conductivity of fresh rinsewater;
V_r	=	Volume of rinse tank (L); and
D	=	drag-out rate in liters (L).

Several data points should be collected.

Rinsewater purity criteria vary for different processes. Average purity criteria for rinsing following cleaning, functional surface finishing, and decorative surface finishing are 700 mg/L, 400 mg/L, and 22.5 mg/L, respectively. If a site indicates that their surface finishing process requires purer rinsewater, then the permit writer or control authority may choose to use additional resources to select an appropriate flow rate. Often, the permit writer or control authority can identify sites that require purer rinsewater due to their use of softened or deionized water for rinsing. They may test a site's rinsewater to help assess their actual requirements, with the premise that their required water purity criteria is no lower than the existing purity level in the rinse tanks. Testing would involve collecting composite samples from the final rinse tank following each unit operation and analyzing them for TDS.

The following are additional resources that the permit writer or control authority can use to select an appropriate flow rate when the drag-out rate is higher than average or purer rinsewater is necessary.

Technical Literature. One source of data to use in identifying an appropriate flow rate for an operation is technical literature. Using the rinse water purity criteria along with the drag-out rates and the typical concentrations of TDS in various process baths, the permit writer or control authority can calculate a "literature" flow rate. Table 15-5 presents, for several types of rinses, calculated flow rates for a single-stage overflow rinsing configuration and a two-stage countercurrent cascade rinsing configuration. Both rinsing configurations are assumed to have flow control (i.e., water use is coordinated with drag-out introduction using a conductivity control or other device). This table presents the TDS concentration in the associated bath (from literature), the target TDS in the rinse (based on the rinsing criteria), the part type, the assumed drag-out rate, and two PNF values.

The first value, PNF 100% Control, is a calculated value based on the assumption that a site perfectly coordinates work flow and rinsewater use (e.g., using a conductivity controller). In actual operations, perfect coordination is nearly impossible to achieve because the quantity of rinsewater needed to meet a given rinse criterion usually cannot be added exactly at the time that drag-out enters and is dispersed in the rinse tank. For example, when a barrel of parts is rinsed, it is usually placed in a rinse tank for 1 to 3 minutes. The rinsewater volume needed to meet the rinse criterion may be 50 gallons or more. The flow rate of water into the rinse tank is typically less than 10 gpm (flow rates into rinse tanks vary depending on the pipe size and water pressure and may be reduced by a flow restrictor). Therefore, it may take 5 minutes to add the 50 gallons of rinsewater. Because of this, actual water use rates will be higher than those presented in the column, PNF 100% Control. A reasonable assumption is that good water flow control will result in a PNF twice that of the calculated values that assume 100% control. These flows are shown as PNF 100% excess.

The permit writer or control authority can use the rinsing configurations, drag-out rates, target total dissolved solid (TDS) concentrations, and equations provided in Table 15-5 to calculate other PNFs from literature sources.

MP&M Field Sampling Data. The permit writer may also find data from the MP&M field sampling program useful in selecting an appropriate PNF for a specific operation. For samples collected for this program, the Agency obtained flow and production data as well as a description of the pollution prevention and water conservation practices in place for several sampled rinses. Table 15-6 summarizes these data, collected at two MP&M sites, for countercurrent cascade rinsing operations (the recommended technology on which the MP&M technology options were based). This table also shows the type of process solution, the type of part processed through the rinse, an adjusted TDS, and an adjusted PNF. The adjusted TDS values are common rinsing criteria found in the literature. The adjusted PNF values were calculated using the adjusted TDS values and the equations presented with Table 15-5. Therefore, the adjusted PNF values are rinsewater flow rates that would be expected for these countercurrent cascade rinsing operations if they were to provide rinsewater quality equal to the adjusted TDS. The purpose of presenting these values is to demonstrate the reasonableness of the PNFs calculated based on literature values in Table 15-5.

15.4 Flow Guidance for Machining Operations

Many machining operations use metal-working fluids to cool and lubricate parts and machining tools during cutting, drilling, milling, and other machining operations. These fluids become contaminated and begin to lose their working characteristics. If neglected, the fluids become unusable and require treatment and disposal. Through proper care, the life span of the fluids can be extended indefinitely. For most machining operations, prolonging metal-working fluid life reduces the cost of treatment and disposal, as well as the cost of fresh coolant.

Section 15.4.1 provides background information to identify pollution prevention and water conservation practices applicable to machining wastewater and evaluation criteria to assess if a particular site has properly implemented these practices. Section 15.4.2 shows the influences on flow rates from machining operations. Section 15.4.3 presents guidance for selecting the appropriate flow rate for sites that do not have pollution prevention and recycling practices in place. The guidance is based on various factors that impact machining fluid requirements, including type of machining operation, base metal machined, and type of machining system.

15.4.1 Identification of Sites With Pollution Prevention and Water Conservation Practices

This subsection provides background information and guidance that the permit writer or control authority can use to determine if a site has implemented pollution prevention and water conservation practices for their machining operations. If the site has implemented pollution prevention and water conservation practices, the permit writer or control authority can use the concentration-based limitations to ensure compliance. If the site has not implemented these types of practices, the permit writer can use the information in this subsection to calculate the flow rates for developing mass-based limits (although not required).

Many MP&M sites use some type of pollution prevention and water conservation practices for machining wastewaters. Some sites have implemented numerous pollution prevention and water conservation methods and technologies that result in very low machining wastewater discharge rates and in some cases eliminate the discharge of machining fluids. Pollution prevention and water conservation practices are applicable to all machining operations; however, process-related factors and site specific conditions may restrict the utility of certain methods.

Wastewater Generation from Machining Operations

Various types of metal-working fluids, also termed cutting fluids and coolants, are used in machining operations to improve the life and function of machine tools. During machining, these fluids are circulated over working surfaces, reducing friction, cooling the tool and part, and removing metal chips from the work face. The type of fluid used depends on the type of machining being performed and the preference of the site. The fluids are broadly divided

into four groups: straight oil (neat oils), synthetic, semisynthetic, and soluble oil. The most commonly used fluids are soluble oils synthetics, and semisynthetics.

Water-soluble coolants are prepared by mixing a concentrated coolant with water in a 1:15 to 1:30 ratio to produce a fluid with a 90 to 98 percent water content. Most water soluble coolants are suitable for light- and medium-duty operations. Synthetic coolants are designed for high cooling capacity, lubricity, and corrosion prevention. Common chemical agents in synthetics include: amines and nitrites for rust prevention; nitrates for nitrite stabilization; phosphates and borates for water softening; soaps and wetting agents for lubrication; phosphorus, chlorine, and sulfur compounds for chemical lubrication; glycols to act as blending agents; and biocides to control bacteria growth. Semisynthetics contain small dispersions of oil in an almost otherwise organic water-dilutable system. Straight oils are good lubricants, but are less effective for cooling, and therefore are limited mostly to use in low-speed operations (8).

Metal-working fluids are periodically discarded because of reduced performance or development of a rancid odor. The fluids that contain a large percentage of oil typically are hauled as solid waste for disposal or recovery. Fluids with lower oil content typically are sent to a site's wastewater treatment system for treatment and subsequent discharge.

Metal-working fluids degrade mainly because of contamination with tramp oil and dirt and by bacterial growth, which can be accelerated by tramp oil contamination. Tramp oil contamination is caused mostly by oil from the part's surface during machining and by leaks of lubricating and hydraulic oils from the machine. Airborne dust or poor housekeeping practices can cause dirt to accumulate. Bacteria are initially contributed from the surfaces of the machine and parts and from the air. More than 2,000 known species of bacteria have been reported to affect and eventually destroy the stability of machining fluids (5). Bacteria feed on the fluids' chemicals, causing the fluids to lose lubricity and corrosion inhibition. Under anaerobic conditions, sometimes caused by floating tramp oil in coolant sumps, bacteria generate a hydrogen sulfide odor.

In addition to spent fluid, machining operations may generate wastewater from rinsing. Machined parts may be rinsed to remove fluid, chips and other foreign materials. However, parts typically are not rinsed following machining. More frequently, the fluid is permitted to remain on the part to inhibit corrosion, is wiped off using shop towels, or is cleaned in an alkaline cleaning or degreasing operation.

The quantity of wastewater generated by a machining operation depends primarily on the volume of work performed. Production volume can be roughly measured by the quantity of metal stock removed by turning, milling, boring, broaching, cutting and other machining operations. For most machining operations, the removed metal consists of small fragments called chips or fines. Most chips carry a thin film of fluid on their surfaces, which, when it drains, is another source of wastewater.

Pollution Prevention and Water Conservation Practices for Machining Operations

The Agency has identified two categories of pollution prevention and water conservation practices and technologies that can be applied to reduce metal-working fluid discharge: those used to prevent metal-working fluid contamination and those used to extend the life of machining fluids, including recovering and recycling metal-working fluids. Within each of these categories are several specific practices and technologies. Table 15-7 presents several examples of these practices, which are discussed below.

Prevention of Metal-Working Fluid Contamination. Sites can implement various methods to reduce the amount of fluid contamination. Several of these methods are discussed below.

Reduction of Contamination From Tramp Oil. Tramp oil is a primary contaminant in machining fluids and for many sites the major cause of metal-working fluid degradation. The Agency has identified the following methods to reduce contamination of metal-working fluid with tramp oil.

- Use of Coolant in Hydraulic and Other Oil Systems. Some metal-working coolants are formulated to be used as hydraulic fluid and/or lubricant in concentrated form, and as a coolant in its dilute form (i.e., diluted with water). When used as a hydraulic fluid or lubricant, leaks of the fluid will be assimilated into the coolant without causing contamination.

- Replacement of Hydraulics with Electrical Systems. Hydraulic systems on some machines can be replaced by newer electrical systems that do not contain hydraulic fluid. This replacement could be economically performed during major equipment overhauls.

- Machine Maintenance. Machine design and age may affect the quantity of hydraulic oil that leaks to the metal-working fluid during machining operations. There are numerous hydraulic systems used with machines, depending on the type of machine. These systems will leak variable quantities of oil depending on design, sealing mechanisms, operating pressures, and other factors. Older machines, especially those that are not properly maintained, can have excessive leaking from hydraulic seals. Sites should implement scheduled maintenance of machines to check and repair sealing mechanisms.

Reduction of Contamination from Makeup Water. Makeup water contributes to the dissolved solids content of the metal-working fluid, reducing fluid life. This problem occurs more rapidly when water with high TDS is used for evaporative makeup. Certain dissolved solids or minerals cause more problems for metal-working fluids than others. For example,

chloride salts and sulfates corrode at levels of greater than 100 parts per million. Sulfates also promote the growth of sulfate-reducing bacteria that cause fluids to become rancid. When minerals become concentrated in the fluid, they can cause increased corrosion, gumming, and machine wear (8). Consequently, using hard water can reduce the fluid life. Deionized (DI) water can be used in place of hard water (DI units can be either purchased or rented).

Reduction of Contamination from Sumps. The Agency has identified the following methods to reduce contamination from metal-working fluid sumps:

- Steam Cleaning of Sumps. Machine coolant sumps harbor bacteria that degrade the fluids. If coolant sumps are not sterilized during clean-outs, the fresh coolant added to cleaned sumps may be degraded by residual bacteria. Bacteria from sumps can be eliminated by steam cleaning during clean-out.

- Sump Modification. Many coolant sumps are designed as in-ground concrete tanks, whose porous concrete surfaces absorb oil and promote bacterial growth. Fluid life may be extended by improving the design of the sumps. Potential design changes include inserting metal tanks and coating sump walls with fiberglass or other non porous material.

Reduce Miscellaneous Contamination. Good housekeeping practices can extend metal-working fluid life by reducing contamination. Sites can implement housekeeping procedures to keep floor sweepings, solvents, paint chips, soil, rags, paper, and other debris out of the coolant sumps.

Extension of Metal-Working Fluid Life. Sites can implement several methods to extend the life of metal-working fluids. These include raw material substitution, equipment modification, and fluid monitoring, as discussed below.

Raw Material Substitution. As discussed above, four general types of metal-working fluids are used in machining operations. Within a given group of fluids, such as soluble oil, various formulations are used. Within each group, the major difference from one fluid to another is the “additive package.” Additives are included in most metal-working fluid formulations to improve fluid performance (e.g., improve lubricity, reduce friction, or increase corrosion protection) and increase life span (e.g., reduce bacterial growth). Costs of different metal-working fluids can vary by 100% or more. Fluids with additive packages that do not meet the lubrication and cooling requirements of the specific machining operation may degrade faster than other metal-working fluids. These fluids will need to be replaced more often and increase overall operating costs. These fluids may also affect tool life, further increasing operating costs. Therefore, using the proper grade metal-working fluids can increase the life span of the fluid, reducing the generation of waste machining fluids and decreasing the overall operating costs.

Equipment Modification. The Agency has identified the following types of equipment modifications that can extend the life of machining fluids.

- Replacement of Air Agitation With Mechanical Agitation. Some sites use air agitation in central coolant sumps to constantly mix the fluid and prevent phase separation and pooling of tramp oil. However, air agitation increases the activity of aerobic bacteria by adding oxygen, which causes the bacteria to consume fluid additives. An alternative method of mixing is mechanical agitation (i.e., pumping). Mechanical agitation mixes without increasing the oxygen concentration of the coolant.

- Removal of Tramp Oil. Machining fluid life can be extended by continuous, in-sump removal of tramp oil. Sites can install continuous oil-skimming devices directly in the machine sump to remove tramp oil. Tramp oil can also be removed using absorbent blankets, fabrics, or pillows.

Fluid Monitoring. During use, the metal-working fluid undergoes various physical, chemical, and biological changes. If the properties of the fluid are monitored on a regular basis, the fluid can be adjusted before it is degraded. Parameters measured to monitor the fluid include: pH, coolant concentration (using a refractometer or titration kit), TDS, tramp oil (visual) and biological activity (using dip slides available from coolant suppliers and laboratories (3) or other methods). These data can be used to guide periodic fluid adjustments and/or develop statistical process control (SPC) procedures. Fluid concentration should be monitored at least weekly, if not daily. The correct pH operating range of most coolants is 8.5 to 9.5. If the pH drops below the operating range, coolants may cause rusting and be prone to increased biological activity. Dilute concentrations can shorten tool life, increase biological activity, and cause rust. Rich concentrations can lead to foaming and tramp oil contributes to biological growth.

Metal-Working Fluid Recycling. Most metal-working fluids can be recycled on site by removing contaminants accumulated during use and storage. Recycling methods include settling, straining, skimming, simple filtration, membrane filtration, coalescing, centrifugation, cyclone separation, magnetic separation, and pasteurization. Some of these methods can be used in combination to recover nearly 100% of the metal-working fluid. Sites can purchase recycling equipment or hire commercial services that perform on-site processing (6,7,23). A self-contained recycling unit can be purchased that is specifically designed for smaller machine shops and is a complete sump maintenance and fluid recycling system in one unit (8). In most cases, sites can facilitate metal-working fluid recycling by consolidating the types of machining fluids they use to one or two types of fluid.

Additional metal-working fluid can be recycled by chip drainage. Chip drainage can account for up to 50 percent of annual fluid use (7). During machining, the metal chips (scraps) become coated with fluid. Part of the fluid drains from the chips and part remains on the chips. In many cases, the chips and associated fluid are dropped to the floor and manually

collected in storage containers. Some machines send the chips and fluid to a storage container using automated equipment (e.g., belt or pneumatic conveyor). Fluid that drains from chips can be recycled rather than discharged, which may require design changes of chip handling and storage equipment.

Evaluating Metal-Working Fluid Use at a Site

To identify sites with pollution prevention and water conservation practices in place for machining operations, the permit writer or control authority should focus on the categories of practices discussed above. Specifically, sites should pass both of the following criteria for the majority of machining operations on site:

- The site should use practices and/or technologies to prevent contamination of the metal-working fluid; and

- The site should use some type of practice or technology to extend the life of the metal-working fluid.

Table 15-7 presents examples of practices and technologies that sites can implement to satisfy these criteria.

15.4.2 Influences on Flow Rates

Available data show that wastewater discharge rates from machining operations are a function of production when measured in terms of the mass of metal stock removed by the machining operations (see Table 15-1). Wastewater discharge rates are also affected by other factors that cause PNFs to vary from site to site. The most important of these factors are the type of metal-working fluid used, the design of the machine fluid system, the machining operations performed, and the fluid management practices used. Other factors include base material being machined, climatic conditions, design and age of machines, and chip storage methods. Sites control several of these factors (e.g., type of metal-working fluid, fluid management practices, and chip storage methods) by implementing pollution prevention and water conservation practices and technologies. The other factors are, to a degree, beyond the control of the site and will affect the minimum flow rate achievable by a site. The effects of several of these factors on flow rates are discussed below.

Design of the Machine Fluid System. Fluids used in machining are stored either in sumps dedicated to individual machines (either internal or external to the machine), or in central sumps that serve multiple machines. Large machining operations typically use central sumps, whereas small machine shops tend to have individual sumps for each machine. Central systems usually contain three to five times greater volume of fluid per machine from individual sumps. The reservoir volumes of most machines with internal sumps are typically 10 to 50 gallons. External sumps serving a single machine typically have a volume of 1,000 to 2,500 gallons. Central sumps may have volumes that exceed 50,000 gallons.

The amount of make-up fluid in a central system amounts to a smaller percentage of total fluid than in a single machine operation. Consequently, the potential for bacterial degeneration is greater in central systems as the bacteria have a longer time in which to attack the fluid (5). Further, central sumps are often unlined concrete basins, whose porous walls hide bacteria and prevent complete disinfecting during clean-outs. This reduces the time needed for the bacteria to become reestablished (7). Additionally, the larger pumps used in central systems keep the tramp oils suspended in the fluid so they do not readily "float out," adding to further bacterial attack. Central systems may require more maintenance than dedicated sumps to prevent bacterial growth.

Machining Operations Performed. The ratio of scrap metal (e.g., chips) generated to fluid used varies among machining operations. For example, metal cutting may generate large pieces of scrap metal using a small volume of fluid, whereas a milling operation usually produces a much smaller mass of chips for the same volume of fluid. However, based on the MP&M survey database, EPA did not identify any trends in PNF across types of machining operations performed.

Base Material Being Machined. The type of base material being machined affects the quantity of metal-working fluid used. The hardness of base materials varies, which in turn affects the speed at which the base metal can be removed. Harder metals require more fluid than softer metals for the same operation.

Climatic Conditions. The temperature of the shop can affect the life span of metal-working fluid in that warmer temperatures may foster the growth of certain bacteria.

Design and Age of Machines. The design and age of machines may affect the quantity of hydraulic oil that is leaked to the metal-working fluid during machining operations. Numerous hydraulic systems are used with machines. These systems will leak variable amounts of oil depending on design, sealing mechanisms, operating pressures, and other factors. Older machines, especially those that are not properly maintained, can have hydraulic seals that excessively leak.

Uniform Coolant Use. Minimizing the number of different machine coolants used at a facility and reduces the chance of formulation errors. When employees are familiar with fluid properties and coolant formulation chemistry, it is less likely that coolant batches will be prepared incorrectly, which many times requires the entire batch to be discharged to the on-site wastewater treatment facility. Facilities may also save money by purchasing larger volumes of coolant (i.e., economies of scale).

15.4.3 Guidance for PNF Selection

The following table presents PNF data (summarized from Table 15-1(b)) from the MP&M surveys for machining operations. Data are in gallons of wastewater (i.e., primarily spent coolant and associated rinsewater, if used) discharged per pound of metal removed.

PNFs For Machining Operations

Minimum PNF	10th Percentile	25th Percentile	Median PNF	75th Percentile	90th Percentile	Maximum PNF	Mean PNF
0.0003	0.011	0.05	0.12	0.18	1.68	376	1.6

Source: MP&M Detailed Survey Database.

As shown in this table, the PNFs for machining operations range over several orders of magnitude. Based on data gathered from the MP&M surveys, site visits, and technical literature, the Agency believes that the wide range of PNFs indicates the variety and extent of pollution prevention practices in use at MP&M sites (e.g., sites with coolant maintenance and recycling practices in place versus sites without these practices in place).

For sites that do not have pollution prevention and recycling systems in place for machining operations, the permit writer or control authority can use the PNF data to estimate target flows. The permit writer can multiply the daily amount of metal (lbs) processed through all machining operations by the median PNF (gal/lb) to determine the site's target daily flow (gal/day).

The Agency believes that most sites can reduce their flow rates to levels at or below the median PNF for machining operations by implementing one or more of the pollution prevention and water conservation practices discussed previously. Site-specific conditions may limit the ability of certain sites to reduce their flow rates.

15.5 Flow Guidance for Painting Operations

Paint is applied to a base material for protective and decorative reasons in various forms, including dry power, solvent-diluted formulations, and water-borne formulations. Various methods of application are used, the most common being immersion and spraying. Water is used in painting operations in paint booth water-wash systems (water curtains), in water-borne formulations, in electrophoretic painting solutions and rinses, and in clean-up operations. This discussion is directed at water use in spray painting booths; however, this subsection also provides some information on rinsing following electrophoretic painting and water clean-up.

Section 15.5.1 presents background information to identify pollution prevention and water conservation practices applicable to painting operations. This includes discussions of wastewater generated from painting operations, and practices and technologies that can be implemented to reduce wastewater discharges. Section 15.5.2 discusses influences on flow rates. Section 15.5 presents guidance for selecting appropriate flow rates for sites that do not have pollution prevention and water conservation practices in place. The guidance is based on various factors that impact water use requirements.

15.5.1 Identification of Sites With Pollution Prevention and Water Conservation Practices

This subsection provides background information and guidance that the permit writer or control authority can use to determine if a site has implemented pollution prevention and water conservation practices for painting operations. If the site has implemented pollution prevention and water conservation practices, the permit writer or control authority can use the concentration-based limitations to ensure compliance. If the site has not implemented pollution prevention and water conservation practices, the permit writer or control authority can use the information in this subsection to calculate the flow rates for developing mass-based limitations.

Wastewater Generation from Painting Operations

In spray painting, an organic coating is applied to a product. During manufacturing operations, spray painting is usually performed in a booth to control the introduction of contaminants and the release of solvent and paint to the work place and environment, and to reduce the likelihood of explosions and fires. Paint booths are categorized into two types (dry-filter or water wash) by the method of collecting the over spray (i.e., the paint that misses the product during application). The type of booth designs selected depends mainly on production requirements, including part size and configuration, production rate and transfer efficiency, the material being sprayed, and finish quality requirements.

Dry-filter booths use filters to screen out the paint solids, by pulling prefiltered air through the booth, past the spraying operation, and through the filter. The air entrains the overspray and is pulled through the filter, which collects the paint. Solvent evaporates from the paint, leaving the paint solids on the filter. Filters are periodically replaced when they become laden with paint solids and the air flow through them is restricted. Dry-filter booths are most often used when paint usage does not exceed 20 gallons/8-hour shift/10 feet of chamber width (14). At higher usage rates, the frequency of filter changes greatly increase operating costs (i.e., filter, filter disposal, and labor).

The only water used with dry filter units is to clean painting equipment (e.g., guns and lines) when water-borne paints are used. The operation of dry-filter units is essentially dry when solvent-based paints are used.

Water-wash booths use a “water curtain” to capture paint overspray. Air containing entrained paint overspray is pulled through a circulating water stream, which “scrubs” the overspray from the air. There are two primary types of water-wash booths, side-draft and downward-draft. The basic difference between the two types is the way the air moves through the system to draw the paint overspray in for capture (15,16). Side-draft units are typically used by small painting operations and the downward-draft units are used with large and/or continuous operations.

Water-wash booths use a water stream that recirculates from a sump or tank with a typical capacity of 200 to 5,000 gallons or more. Downward-draft systems normally contain much larger volumes of water than side-draft systems. Water is periodically added to the system as make-up for evaporative losses. The sump water is periodically discharged, usually during general system cleaning or maintenance. The discharge rate depends on various factors, including booth design, paint type, overspray rate, and the water treatment methods used. Water is also used to clean the painting equipment and the paint booth. Booth cleanup may involve using paint stripper to remove dried paint from the walls of the booth and the piping system.

A common practice in water-wash booth operation is to immediately detacify suspended paint solids to reduce maintenance problems and to subsequently separate and remove the solids from the water. The organic resins that make up the bulk of the paint coating are insoluble in water and tend to stay tacky if not treated with some other material added to the water (15,16). If left untreated, the tacky solids can plug recirculation pipes and pumps and adhere to wetted surfaces of the booth. Dissolved solids are either immediately precipitated and flocculated, removed by water treatment, or discarded when the sump is discharged.

Solids can be detacified and removed in various ways, depending on the type of paint used and the booth design. Detacification chemicals include sodium hydroxide (caustic), metal salts, clay, and polymers. Depending on the type of paint and the detacification chemical, the paint solids may either disperse or agglomerate. Agglomerated solids may either sink or float. In solids dispersal, the suspended solids increase in concentration as over spray enters the water. Subsequently, another chemical is added to the water that causes the dispersed solids to agglomerate into a dense floc, which is then removed.

Paint solids are removed from the booth water-wash system by various means. These removal technologies vary in sophistication, automation, efficiency (removal and separation), and capital and operating costs. The most common methods include passive settling, skimming, screening, filtration (bag, roll bed, press), and centrifugal methods (hydrocyclone, centrifuge).

Another common method of painting is electrophoretic painting (also known as electrocoating or electrodeposition), which is the process of coating a work piece by making it either anodic or cathodic in a bath that is generally an aqueous emulsion of the coating material. The electrophoretic painting bath contains stabilized resin, pigment, surfactants, and sometimes organic solvents in water. Electrophoretic painting is used primarily for primer coats (e.g., bodies for motor vehicles or mobile industrial equipment) because it gives a fairly thick, highly uniform, corrosion-resistant coating in relatively little time. During this process, precleaned parts carrying an electrical charge are immersed into the coating tank (paint) and then through a rinsing system. Rinsing removes excess paint (drag-out) from the parts. The typical rinsing procedure is a three-stage countercurrent rinse, and may include both dip and spray rinsing. Typically, the final rinse is performed with deionized water.

Ultrafiltration is commonly used to separate and recover paint solids and recycle rinsewater, by counter flowing the rinsewater into the painting bath and filtering the bath with ultrafiltration. The ultrafilter removes excess water from the bath, recycles the paint solids to the bath, and recycles the water (permeate) to the rinse system. Occasional blowdown of rinse water is needed to purge the system of contaminants. The volume of wastewater discharged can be reduced by processing the rinsewater through a reverse osmosis unit (17).

Pollution Prevention and Water Conservation Practices for Painting Operations

The Agency has identified three categories of pollution prevention and water conservation practices that sites can implement to reduce or eliminate wastewater discharges from painting operations: practices to reduce the quantity of paint entering the water system; recycling technologies for paint booth water; and conversion of water-wash booths to dry-filter booths. These are discussed in this subsection and summarized in Table 15-8.

Reducing the Quantity of Paint Entering the Water System. Sites can implement various methods to reduce the quantity of paint entering the water system. Three of these methods are discussed below.

Improving Spray Painting Operating Practices. Sites can implement various practices that reduce the quantity of paint and other material entering the water system of a paint booth and thereby reduce the need to discharge wastewater. Generally, implementing these practices only requires operator training. These practices include: racking and positioning parts to minimize over spray; selecting the proper nozzle for an efficient spray pattern; scheduling work to reduce color changes and associated clean-outs of guns, lines, and pots; and housekeeping to prevent painting wastes and foreign materials from entering the booth's water system.

Improving Transfer Efficiency. The transfer efficiency (i.e., spray efficiency) is the amount of coating that is applied to the part divided by the amount of coating that is sprayed from the gun. It is reported as a percentage. The transfer efficiency depends on several factors, including the spraying equipment, part size and configuration, paint type, and operating methods. By improving the transfer efficiency, booth water processing requirements can be reduced.

During the past 15 years, spraying equipment has improved, primarily in response to more stringent air pollution regulations and rising paint costs. One of the key improvements has been replacement of conventional compressed air spray equipment by more efficient equipment. In terms of transfer efficiency, the common types of spray equipment are ranked as follows (shown in order of increasing efficiency with relative transfer efficiencies shown in parenthesis): conventional compressed air (25%), airless (35%), air assisted airless (45%), electrostatic, (65%), and high-volume/low-pressure (HVLP) (80%) (12). The HVLP equipment has been widely implemented due to the high transfer efficiency, as well as the low cost of converting from conventional compressed air equipment. The cost is primarily for the spray

guns, since the compressors and other equipment are the same as for conventional compressed air painting equipment.

Installing Gun Cleaning Station. After use, spray-painting equipment must be cleaned to prevent a buildup of paint solids. Spray guns are often cleaned by spraying solvent through the lines and guns and into the booth. However, this practice increases the amount of paint entering the booth's water system and increases emissions of volatile organic compounds (VOCs). An alternative practice is to install gun-cleaning stations. A commercial gun-cleaning unit is designed to sit on top of a 55-gallon drum. The gun is connected to the solvent tank and the drum. Solvent is drawn through the gun and exits into the drum, where it can be recovered by distillation (9).

Booth Water Recycle. Various methods and equipment can reduce or eliminate the discharge of the water used in water-wash booths. These methods and equipment prevent the continuous discharge of booth waters by conditioning (i.e., adding detacifiers and paint-dispersing polymers) and removing paint solids. The least efficient paint booth water-wash system, in terms of water use, is one where the paint solids are not conditioned and accumulate until booth water must be replaced. Cleaning such systems typically involves draining or pumping the water from the booth reservoir and contract hauling the entire waste product. Due to high operating costs and downtime, this procedure is usually used only by low production operations. With moderate- and high-production levels, daily, if not continuous, booth water maintenance is needed to conserve water. The most basic form of water maintenance is the removal of paint solids by manual skimming and/or raking. These solids can be removed without water conditioning since some portion of solvent-based paints usually floats and/or sinks. With the use of detacifiers and paint-dispersing polymer treatments, more advanced methods of solids removal can be implemented. Some common methods are discussed below.

Wet-Vacuum Filtration. Wet-vacuum filtration units consist of an industrial wet-vacuum head on a steel drum containing a filter bag. The unit vacuums paint sludge from the booth. The solids are filtered by the bag and the water is returned to the booth. Large vacuum units are also commercially available that can be moved from booth to booth by forklift or permanently installed near a large booth.

Tank-Side Weir. A weir attached to the side of a side-draft booth tank allows floating material to overflow from the booth and be pumped to a filtering tank for dewatering (15,16).

Consolidator. A consolidator is a separate tank into which booth water is pumped. The water is then conditioned by adding chemicals. Detacified paint floats to the surface of the tank, where it is skimmed by a continuously moving blade. The clean water is recycled to the booth (15,16).

Filtration. Various types of filtration units are used to remove paint solids from booth water. The booth water is pumped to the unit where the solids are separated, and the water

is then returned to the booth. The simplest filtration unit consists of a gravity filter bed with paper or cloth media. Vacuum filters are also used, some of which require precoating with diatomaceous earth (15,16).

Centrifuge Methods. Two common types of centrifugal separators are the hydrocyclone and the centrifuge. The hydrocyclone is used to concentrate solids. The paint booth water enters a cone-shaped unit under pressure and spins around the inside surface. The spinning increases the gravity, which causes most of the solid particles to be pulled outward to the walls of the cone. Treated water exits the top of the unit and the solids exit the bottom. Some systems have secondary filtration devices to further process the solids. The centrifuge works in a similar manner, except that the booth water enters a spinning drum, which imparts the centrifugal force needed to separate the water and solids. Efficient centrifugation requires close control of the booth water chemistry to assure a uniform feed. Also, auxiliary equipment such as booth water agitation equipment may be needed.

Conversion of Water-Wash Booths to Dry-Filter Booths. Water-wash booths can be converted to or replaced by dry-filter booths. The dry-filter booths have the potential to eliminate the wastewater discharge, but they create a solid wastestream. The choice between using a water-wash booth or a dry-filter booth is primarily based on the amount of over spray. It is usually cost-effective to use a dry-filter booth when paint usage does not exceed 20 gallons/ 8-hour shift/10 feet of chamber width (14).

A 1989 U.S. Navy study concluded that conversion from wet to dry booths can be cost-effective for a range of operations. This study included a survey of military and industrial facilities that have successfully been converted and an economic analysis based on typical Navy painting operational parameters (19).

Evaluating Water Use for Painting Operations

To identify sites with good painting-related water use practices, a permit writer or control authority should focus on the categories of these practices discussed above. Specifically, sites should meet both of the following criteria for the majority of painting operations on site:

(1) The site should use practices and/or technologies to reduce the amount of paint entering the water system; and

(2) The site should use some type of practice or technology that minimizes or eliminates the discharge of wastewater by recycling the water used during painting or replacing existing wet systems with dry systems.

Table 15-8 presents examples of practices and technologies that sites can implement to satisfy these criteria.

15.5.2 Influences on Flow Rates

Available data show that wastewater discharge rates from painting operations are a function of production when measured in terms of the surface area of parts painted (see Table 15-1(a)). Wastewater discharge rates are also affected by other factors that cause PNFs to vary from site to site. Some sites are able to operate without a wastewater discharge, while others have a wide range of PNFs. The most important of these factors are the paint transfer efficiency, booth type and reservoir size, maintenance requirements of the booth, the booth water chemistry and water recycling methods used, and the chemical make-up of the paint being applied. Sites can control a few of these factors (e.g., paint transfer efficiency and the booth water chemistry and water recycling methods used) by implementing the proper pollution prevention and water conservation practices and technologies. The other factors are, to a degree, beyond control of the site and will affect the minimum PNF achievable by a site. The effects of several of these factors on PNF are discussed below.

Solvent, Paint Solids, and Other Components of Paint. The chemical make-up of the paint can impact the PNF. The recirculated water in a water-wash booth contains the various constituents of the paint(s) being applied. With most solvent formulations, the solvents (e.g., xylene, toluene, methylene chloride) are not water-soluble, but can be water-miscible. Some exceptions, such as acetone and methyl ethyl ketone (MEK), are water-soluble. However, in most cases, the solvents are volatile and evaporate over time and exit the booth through the air exhaust system. The organic resins that make up the bulk of the paint coating are insoluble in water and tend to stay tacky if not treated with some additional material introduced to the water (15,16). If left untreated, the tacky solids can plug recirculation pipes and pumps and adhere to wetted surfaces of the booth. Other paint additives, such as wetting agents, pigments, and heavy metals (e.g., zinc and chromium salts) may be soluble in water. These constituents can be made partly insoluble and removed by adjusting the chemistry of the water.

Water-based paints present two problems with regard to water use. First, these paints disperse in water rather than agglomerate like solvent-based paints. This makes the maintenance of paint booth waters more difficult (15,16). Second, water is used to clean spraying equipment when water-based paints are applied, which may generate wastewater. A typical equipment-cleaning procedure is to flush with water, then solvent, then water (18).

Paint Booth Maintenance Requirements. Water-wash paint booths are periodically shut down for maintenance, which usually requires that the water in the booth be removed. Various conditions can exist that may create a need to discharge the water, including odor, bacterial growth, foaming, TDS buildup, and the presence of corrosion and scale constituents.

Booth maintenance typically involves incidental repairs and cleaning the booth surfaces and piping system. Often this is performed according to a maintenance schedule, but periodic repairs may also necessitate an unplanned shut-down and clean-out. A common clean-out procedure is to remove the accumulated paint solids from the water, transfer the water to a

holding tank, and return the water after the maintenance has been performed. Alternate methods are draining the booth water to a sewer or wastewater treatment system or having it hauled to a disposal site. Systems with accumulated paint solids on the wetted surfaces of the booth and in the piping system can be cleaned by circulating an alkaline cleaner or other chemical for dissolving paint. Since the amount of water discharged from water-wash paint booths is a function of the system's maintenance requirements, newer systems that require less maintenance will discharge less water. Therefore, one pollution prevention option for water-wash paint booths is to install new systems or upgrade existing systems to limit maintenance requirements.

15.5.3 Guidance for PNF Selection

The following tables presents PNF data (summarized from Table 15-1) from the MP&M surveys for spray and immersion painting operations, respectively. Data are in gallons of wastewater (i.e., discharged paint booth waters) per square foot of surface area painted.

PNFs for Spray Painting Operations

Minimum PNF	10th Percentile	25th Percentile	Median PNF	75th Percentile	90th Percentile	Maximum PNF	Mean PNF
0.0001	0.002	0.02	0.04	0.04	0.10	1.5	0.08

Source: MP&M Detailed Surveys.

PNFs for Immersion Painting Operations

Minimum PNF	10th Percentile	25th Percentile	Median PNF	75th Percentile	90th Percentile	Maximum PNF	Mean PNF
0.00004	0.00006	0.0005	0.02	0.02	0.19	55	4.6

Source: MP&M Detailed Surveys.

As shown in these tables, the PNFs for painting operations range over several orders of magnitude. The MP&M survey data do not include information on the exact types of pollution prevention and water conservation practices in place at the MP&M sites; therefore, the PNFs listed in this table cannot be directly linked to these practices. Based on data gathered during site visits and from information in technical literature, the Agency believes that the wide range of PNFs indicates the degree to which the sites practice pollution prevention and water conservation (e.g., sites with paint booth water recycling practices in place versus sites without these practices in place).

Based on the available data, the Agency believes that most sites can approach zero discharge of painting booth wastewaters if they implement recycling. For sites that have not implemented recycling of paint booth water, permit writers and control authorities can use the PNF data in the tables above to estimate flow rates for developing mass-based limitations.

15.6 Flow Guidance for Cleaning Operations

Cleaning operations include aqueous degreasing, acid treatment, alkaline treatment, and electrolytic cleaning. Depending on the chemicals, equipment, and procedures used, these processes are commonly referred to as immersion, spray, or electrolytic alkaline cleaning; immersion, spray, or electrolytic acid cleaning or pickling; ultrasonic cleaning; and emulsion cleaning and parts washing.

This section addresses flow guidance for cleaning solutions or baths. Cleaning solutions become contaminated during use and the constituents of the bath are depleted. When the performance of the baths is reduced, the baths are discharged to treatment or contract hauled for off-site treatment and disposal. Rinse waters are also generated from cleaning operations; flow guidance aspects of rinsing are discussed in Section 15.2.

Section 15.6.1 provides background information to identify pollution prevention and water conservation practices applicable to cleaning operations and evaluation criteria to assess if a particular site has properly implemented these practices. Section 15.6.2 shows the influences on flow rates from cleaning operations. Section 15.6.3 presents guidance for PNF selection.

15.6.1 Identification of Sites With Pollution Prevention and Water Conservation Practices

This subsection provides background information and guidance that can be used by the permit writer or control authority can use to determine if a site has implemented pollution prevention and water conservation practices for their cleaning operations. If the site has implemented pollution prevention and water conservation practices, the permit writer or control authority can use the concentration-based limitations to ensure compliance. If the site has not implemented pollution prevention and water conservation practices, the permit writer or control authority can use the information in this subsection to estimate flows for developing mass-based limitations.

Many MP&M sites implement pollution prevention and water conservation methods and technologies that result in low cleaning wastewater discharge rates, and in some cases, eliminate the discharge of cleaning solutions. Pollution prevention and water conservation practices are applicable to all cleaning operations; however, process-related factors and site-specific conditions may restrict the utility of certain methods. This subsection identifies pollution prevention and water conservation practices and technologies applicable to cleaning operations and provides guidance on how to evaluate a site's water use practices.

Wastewater Generation From Cleaning Operations

MP&M sites commonly perform cleaning as a stand-alone operation or in combination with other MP&M unit operations such as anodizing, electroplating, conversion

coating, and painting. Cleaning removes surface contaminants that affect the appearance of parts or the ability to further process the parts. Various types of acidic and alkaline solutions are used for cleaning.

Alkaline cleaners are usually impacted by organic soils such as oil and grease. The effectiveness of most alkaline cleaners is reduced when the oil concentration of the bath is in the range of 1 to 5 g/L or more. Oil and grease enter the alkaline cleaning bath on the parts being processed. The rate of oil buildup depends on the production rate (measured in square feet per day) and the quantity and characteristics of the contamination on the parts. Acid treatment solutions and, to a lesser extent, alkaline treatment solutions accumulate dissolved metals from corrosion of the base metals being processed. The dissolved metal reduces the strength of the cleaning bath. As dissolved metal increases, additional acid or alkaline solution is added; however, at certain metal concentrations, the bath is no longer usable. The tolerable concentration of dissolved metals depends mostly on the type of acid or alkaline solution and the function of the bath. The buildup rate of dissolved metal depends primarily on the production rate, type and concentration of acid or alkaline solution, type of base metal, duration of cleaning cycle, and bath temperature.

Pollution Prevention and Water Conservation Practices for Cleaning Operations

The Agency identified three categories of pollution prevention and water conservation practices that can be implemented to reduce or eliminate wastewater discharges from cleaning operations: housekeeping and maintenance; oil and suspended solids removal; and dissolved solids removal. These are discussed in this subsection and summarized in Table 15-9.

Housekeeping and Maintenance. Sites can implement various housekeeping and maintenance practices to reduce the quantity of cleaning solution discharge. Several of these practices are discussed below.

Solution Testing. The chemical make-up of cleaning solutions changes over time due to evaporative losses, water additions, cleaning chemical drag-out, chemical reactions, and drag-in of impurities. Because of these factors, cleaning baths lose strength, performance declines, and solutions require disposal. Many sites operate cleaning baths on a three-step schedule: formulate, use, and discard. This procedure can be expensive and inefficient from a production standpoint, and creates large volumes of waste. For this reason, sites should frequently test the strength of the cleaning solution and appropriate chemical additions needed to continue using the solution. By implementing testing and record keeping, sites can reduce the disposal frequency of cleaning baths.

Most alkaline cleaning solutions are proprietary formulations, and the vendors of these solutions provide test methods for determining the condition of a bath. Also, commercial test kits are available that include generic test methods. For example, the strength of an alkaline cleaning solution can be tested using acid-base titration, which measures alkalinity. Also, there

is a dual test method that indirectly measures the level of contamination in the cleaner. This process consists of titrating a measured sample of cleaner (e.g., 5 ml) and then adding a color indicator (phenolphthalein or methyl orange) with an acid of precise concentration (e.g., 1*N* solution of sulfuric acid). Phenolphthalein is used as the indicator to measure free alkalinity and methyl orange is used to measure total alkalinity. By performing both tests, the ratio of total alkalinity to free alkalinity can be calculated. A ratio close to 1 indicates that the cleaner is relatively free of contamination, while a higher ratio indicates that contamination exists. This ratio is sometimes used to determine if a cleaning solution should be discharged. For example, a common guideline used is that the solution is discarded when the ratio exceeds 2.0. The total alkalinity/free alkalinity test method does not work for all cleaners. Because of additives used, some alkaline cleaners do not have any free alkalinity. In such cases, it is necessary to perform more elaborate tests to accurately determine the contaminant concentration (e.g., oil and grease measurement).

Similar test methods exist for acid cleaners. The most common parameters that are included in acid cleaner test programs are acid concentration and dissolved metal concentration. The concentration of sulfuric acid or hydrochloric acid in pickling solutions is usually measured by titrating a sample of the solution with sodium carbonate and using a methyl orange indicator. Iron and other dissolved metals can also be measured by titration or by using laboratory analytical equipment such as an atomic adsorption spectrophotometer.

Recordkeeping. Recordkeeping is essential to maintaining all metal processing solutions, including acid and alkaline cleaners. By maintaining accurate records, a site can identify trends in solution use and focus on extending the lives of those that are frequently discarded. Important records to keep are occurrences of chemical additions and solution dumps, production throughput, and analytical data.

Miscellaneous Housekeeping and Maintenance. To obtain consistently good cleaning results and reduce their solution discharge, sites should implement a regular schedule of housekeeping and maintenance. Tasks should include: checking the accuracy of temperature controls; removing sludge buildup from tanks, heating coils, and temperature regulators; retrieving parts, racks, and other foreign materials dropped into the tanks; and checking the integrity of tanks and tank liners.

Oil and Suspended Solids Removal. Cleaning baths accumulate oil and suspended solids during use. These contaminants eventually reach a concentration that interferes with the effectiveness of the cleaning process, despite the fact that most bath constituents remain usable. Also, contaminated cleaning baths may carry over contaminants to subsequent process solutions. As a result, cleaning baths are often discarded when they reach a certain concentration of contaminants. There are several technologies used to remove oil and suspended solids from cleaning solutions, thereby extending the useful life span of the solutions. These technologies are primarily applicable to alkaline cleaning baths, and are discussed below.

Free/Floating Oil Separation Devices. Separation devices for oil/water mixtures use the difference in specific gravity between oils and water to remove free or floating oil from wastewater. Common separation devices for cleaning solutions include skimming devices (disks, belts, and rotating drum oil skimmers), and coalescers. These devices are not suited for emulsified oil removal, which requires chemical treatment or membrane filtration.

Skimming is a simple method for separating floating oil from cleaning solutions. Skimming devices are typically mounted onto the side of a tank and operate on a continuous basis. The disk skimmer is a vertically rotating disk (typically 12 to 24 inches in diameter) that is partially submerged into the liquid of a tank (typically 4 to 12 inches below the surface). The disk continuously revolves between spring-loaded wiper blades that are located above the surface. The adhesive characteristics of the floating oil cause it to adhere to the disk. As the disk surface passes through the wiper blades, the oil is removed and diverted to a run-off spout for collection. Maximum skimming rates typically range from 2 to 10 gallons per hour of oil. Belt and drum skimmers operate similarly, with either a continuous belt or drum rotating partially submerged in a tank. As the surface of the belt or drum emerges from the liquid, the oil that adheres to its surface is scraped (drum) or squeezed off (belt) and diverted to a collection vessel.

Coalescers separate liquids with specific gravity differences of 0.09 and greater. Coalescers are typically tanks containing a coalescing media that accelerates phase separation (20). A suction skimmer removes cleaning solution and oil from the process tank and pumps it to the coalescer. The media in the coalescers is a material such as polypropylene, ceramic, or glass that attracts oil in preference to water (i.e., oleophilic). The oil/cleaner mixture passes through the unit and the oil adheres to the coalescing media. The oil forms droplets that conglomerate and rise to the surface of the tank, where the oil is removed by a skimming device or weir. According to Stoke's Law, the rise/fall velocity of a dispersed-phase droplet is exponentially increased with the droplet size. Therefore, the coalescing media separates the phases more rapidly than a common gravity settling device.

Media Filtration Methods. Filtration removes suspended solids from cleaning solutions. Common types of filters include cartridge filters, precoat diatomaceous earth filters, and sand or multimedia filters. Cartridge filters are available with either in-tank or external configurations; the in-tank filters typically are used for small tanks and the external filters for larger tanks. Most cartridges are disposable; however, washable and reusable filters are available, which further reduce waste generation. Precoat, sand, and multimedia filters are used mostly for large tank applications. The type of filter media used is based on the chemical composition of the bath. All filtration systems are sized based on solids loading and the required flow rate. Typical flow rates for cleaning solution applications are two to three bath turnovers per hour.

Membrane Filtration. Microfiltration and ultrafiltration are membrane-based technologies used primarily to remove emulsified oil and other colloids from cleaning solutions. The solution entering a microfiltration or ultrafiltration unit is typically filtered conventionally to remove large particulates. Various devices then trap or skim floating oils and allow heavier

solids to settle. The solution is pumped into the membrane compartment, where the membrane traps remaining oil and grease while water, solvent and other cleaning bath constituents pass through. The fluid flows parallel to the membrane with enough velocity to remove the reject from the membrane surface. Ceramic membranes are available in various pore sizes ranging from several hundred angstroms to over 0.2 microns. The appropriate pore size is determined by the specific cleaner to be filtered. The capacity of a unit is based on the total area and flux rate of the membrane. Commercially available units range in capacity from less than 260 to more than 1,300 gallons per day.

Dissolved Metals Removal. Metals become dissolved in acid and alkaline cleaning solutions as a result of corrosion of the base metal. The dissolved metal forms salts or other compounds that reduce the strength of the cleaning bath. Technologies used to remove dissolved metals include acid sorption, diffusion dialysis, and membrane electrolysis, discussed below.

Acid Sorption. Acid sorption is an acid purification technology that is applicable to various acid treatment solutions, as well as other acidic baths (e.g., anodizing baths). The acid sorption unit resembles an ion-exchange column. The column contains a bed of alkaline anion exchange resin that separates the acid from the metal ions.

First, spent acid is pumped upward through the resin; the acid is absorbed by the resin while the metal ions pass through it. The resulting metal-rich, mildly acidic solution is collected at the top of the bed. Water is then pumped downward through the bed and desorbs the acid from the resin. The purified acid solution is collected at the bottom of the bed. This technology can recover approximately 80% of the free acid remaining in a spent acid treatment solution. Purification can be performed in a batch mode, but is most effective in a continuous flow mode (usually expressed in terms of the mass of metal removed from the acid solution per unit time). Equipment capacity ranges from 100 grams/hour to several thousand grams/hour. Units are sized to remove metal near or above the rate at which the metal is being introduced. Typically, a target level of metal concentration is determined and the unit is sized to maintain that level.

Diffusion Dialysis. Diffusion dialysis is a membrane process that separates metal contaminants from the acid solution using an acid concentration gradient between solution compartments. Anion exchange membranes are used to create the compartments. The membranes are usually assembled in a membrane stack, like that used with electrodialysis. The contaminated acid passes through one set of compartments and deionized water through the adjacent compartments. Acid is diffused across the membrane into the deionized water whereas metals are blocked due to their charge and the selectivity of the membrane. Unlike electrodialysis, no electrical potential is used. The acid diffuses because of the difference in acid concentration on either side of the membrane (i.e., material in high concentration moves to an area of low concentration).

Membrane Electrolysis. Membrane electrolysis is a bath maintenance technology that lowers or maintains the concentration of metallic impurities in cleaning solutions. This technology is also applicable to other metal-bearing solutions (e.g., electroplating, anodizing, and stripping solutions). This technology uses an ion-exchange membrane(s) and an electrical potential applied across the membrane(s). The membrane is ion-permeable and selective, permitting ions of a given electrical charge to pass through. Cation membranes allow only cations, (e.g., copper, nickel, aluminum) to pass from one electrolyte to another, while anion membranes allow only anions (e.g., sulfates, chromates, chlorides, cyanide) to pass through. Bath maintenance units can be configured with cation or anion membranes or both.

A typical application of membrane electrolysis is maintenance of an acid cleaning solution. The cleaning solution is placed in an anode compartment that is separated from a second electrolyte by a cation membrane. The solution in the cathode compartment (i.e., catholyte) is typically a dilute acidic or alkaline solution. When an electrical potential is applied, the dissolved metals in the cleaning solution migrate through the cation membrane, into the catholyte. The catholyte is periodically discarded when it becomes saturated with metals.

Evaluating Cleaning Solution Use at a Site

To identify sites with good solution use practices in place for cleaning operations, the permit writer or control authority should focus on the categories of these practices discussed above. Specifically, sites should meet both of the following criteria for the majority of cleaning operations on site:

(1) The site should use practices to monitor the chemical condition of cleaning solutions and make additions/corrections, as needed; and

(2) The site should use some type of practice or technology to extend the life of the cleaning solution, including the prevention of contamination and the removal of contaminants.

Table 15-9 presents examples of practices and technologies that sites can implement to satisfy these criteria.

15.6.2 Influences on Flow Rates

Available data show that wastewater discharge rates from cleaning operations are a function of production when measured in terms of the surface area of parts processed (see Table 15-1). Wastewater discharge rates are also affected by other factors that cause PNFs to vary from site to site. Some sites are able to operate without a wastewater discharge, while other sites have a wide range of PNFs. The most important of these factors are the condition of the surfaces being cleaned, cleaning requirements, type of cleaning process used, and the methods used for maintaining the cleaning solution in usable condition. Sites can control this last factor by implementing the proper pollution prevention and water conservation practices and

technologies, as discussed previously. The other factors are, to a degree, beyond control of the site and will affect the minimum PNF achievable by a site. The affects of these factors on PNF are discussed below.

Condition of the Surfaces Being Cleaned. The condition of the parts being cleaned varies widely, both in terms of the types and quantities of contaminants present and the quantity of oil. For example, some parts may have been wiped clean and have only a light deposit of metal-working fluids, while other parts may be heavily coated. Since metal-working fluids (oils) present on the parts are removed during the cleaning process (aqueous degreasing), the rate of oil that is entering into the cleaning solution per square foot of part cleaned will vary. The type of oil entering the cleaning solution will also affect the cleaning fluid's life-span.

Cleaning Requirements. Some processes, such as electroplating, require a high degree of cleanliness while others, such as phosphate conversion coating, may have less stringent requirements. The cleaning requirements will therefore vary within a site, as well as from site to site, as will the type of cleaning process selected.

Some cleaning processes are more amenable to pollution prevention practices than others, based on the purpose of the cleaning process. For example, many electroplating processes require etching of the surface of the part to enhance adhesion of the electroplated metal deposit. Surface etching introduces dissolved metal into the cleaning solution and will reduce its life-span.

Type of Cleaning Process and Equipment. The life-span of cleaning solutions depends on the type of cleaning process (i.e., process chemistry and cleaning equipment). Numerous factors affect the selection of a cleaning process, including: type and characteristics of contaminants to be removed; type and condition of base metal; size and configuration of parts; degree of cleanliness required; processing capabilities at the site; subsequent operations to be performed; and financial considerations.

The factors that most affect the selection of process chemistry and equipment are the type of contaminants present on the parts, type of base metal, and the subsequent finishing operation, which in turn dictates the cleaning requirements. Contaminants present on parts can be divided into organic and inorganic contaminants. Examples of organic contaminants are machining fluids, miscellaneous oils, waxes, and buffing compounds, which are typically removed by solvents, detergents, and alkaline solutions. Examples of inorganic contaminants are scale, smut, and grinding residue, and are typically removed by acidic solutions. Various methods are used to apply the cleaning solution. For example, solutions can be applied by spraying or immersing, and can be applied electrolytically (including both anodic and cathodic cleaning). Application method is primarily based on the concentration and condition of the contaminant and the configuration of the parts.

The base material of the parts is also a consideration in selecting a cleaning process. Some base materials are chemically or physically altered by certain cleaning steps

because of oxidation, etching, activation, and hydrogen embrittlement. Such changes may be either desirable or damaging. The base material is also important in considering the operating conditions of the cleaning process (e.g., concentration, temperature, current). Further, the base material contaminates the cleaning solution (e.g., etching during acid treatment), and therefore affects the life span of the solution.

15.6.3 Guidance for PNF Selection

The following table presents PNF data (summarized from Table 15-1) from the MP&M surveys for cleaning operations. Data are in gallons of solution discharged per square foot of surface area processed.

PNFs for Cleaning Operations

Unit Operation	Minimum PNF	10th Percentile	25th Percentile	Median PNF	75th Percentile	90th Percentile	Maximum PNF	Mean PNF
Aqueous Degreasing	0.0001	0.003	0.009	0.04	0.45	3.8	125	2.3
Acid Treatment	0.000001	0.001	0.004	0.009	0.03	0.2	140	0.43
Alkaline Treatment	0.00002	0.002	0.01	0.01	0.02	0.24	141	1.1
Electrolytic Cleaning	0.00001	0.0005	0.003	0.01	0.08	0.70	85	2.4

Source: MP&M Detailed Surveys.

As shown in this table, the PNFs for cleaning operations range over several orders of magnitude. The MP&M survey data do not include exact information on the types of pollution prevention and water conservation practices in place at the MP&M sites; therefore, the PNFs listed in this table cannot be directly linked to these practices. Based on the data gathered during site visits and from technical literature, the Agency believes that the wide range of PNFs indicates of the variety of water use practices in place at MP&M sites (e.g., sites with cleaning solution maintenance and recycling practices in place versus sites without these practices in place).

Based on the available data and information, the Agency believes that most sites can reduce their flow rates from cleaning operations by implementing pollution prevention and water conservation practices. Site-specific conditions may limit the ability of certain sites to reduce the flow rates.

15.7 References

1. Kushner, Joseph B. Water and Waste Control for the Plating Shop. Gardner Publications, Inc., 1976.

2. Cushnie, George C. Pollution Prevention and Control Technology for Plating Operations. National Center for Manufacturing Sciences, 1994.

3. Lownheim, Frederick A. Electroplating Fundamentals of Surface Finishing. McGraw-Hill Book Co., New York, NY, 1978.

4. Murphy, Michael, Ed. Metal Finishing Guidebook and Directory Issue for 1994. Metal Finishing Magazine, Hackensack, NJ, 1994.

5. Master Chemical Corporation. A Guide to Coolant Management.

6. Higgins, Thomas. Hazardous Waste Minimization Handbook. Lewis Publishers, Chelsa, MI 1989.

7. Ebasco Environmental. Hazardous Waste Minimization Study, Air Force Plant No. 6. Final Report, Norcross, GA, 1992.

8. University of Northern Iowa. Cutting Fluid Management in Small Machine Shop Operations. Iowa Waste Reduction Center, Cedar Falls, Iowa, undated.

9. Lighthall Industries, Lightahall™ SC 70 Gun Cleaner, Lighthall Industries, Santa Cruz, CA

10. InVireChem. Service Bulletin: First Considerations in Classifying Pint Waste from Spray Booths. InVireChem, Inc., 1989.

11. Nalco. HEC Management Services Program Total Spray Booth Management. Nalco Chemical Company, 1989.

12. Marg, Ken, "HVLP Spray Puts You into Compliance." Metal Finishing, March 1989.

13. Hund, Jerry. "Spray Application Processes," Metal Finishing Organic Finishing Guidebook and Directory Issue for '94. Metal Finishing, Hackensack, NJ, May, 1994.

14. Thomas, Barry, "Spray Booths," Metal Finishing Organic Finishing Guidebook and Directory Issue for '94. Metal Finishing, Hackensack, NJ, May, 1994.

15. Monken, Alan. "Wastewater Treatment Systems for Finishing Operations," Metal Finishing Organic Finishing Guidebook and Directory Issue for '94. Metal Finishing, Hackensack, NJ, May, 1994.

16. Monken, Alan. "Water Pollution Control for Paint Booths," Metal Finishing Organic Finishing Guidebook and Directory Issue for '94. Metal Finishing, Hackensack, NJ, May, 1994.

17. Brewer, George. "Electrodeposition of Organic Coatings," Metal Finishing Organic Finishing Guidebook and Directory Issue for '94. Metal Finishing, Hackensack, NJ, May, 1994.

18. Joseph, Ron. "Low-VOC Waterborne Coatings," Metal Finishing Organic Finishing Guidebook and Directory Issue for '94. Metal Finishing, Hackensack, NJ, May, 1994.

19. Ayer, Jacqueline and McElligott, Anthony, "Navy Paint Booth Conversion Feasibility Study (CR 89.004)," Naval Civil Engineering Laboratory, January, 1989.

20. Batutis, Edward, F. "Keep Your Cleaners Clean," Products Finishing, October, 1989.

21. Berg, Jack, "Filtered Thoughts--Start at the Cleaning Line," Metal Finishing, November, 1986.

22. Steward, F.A. and McLay, W.J. "Waste Minimization Part IV - Recovery/Regeneration of Process Baths", Metal Finishing, November 1985.

23. Freeman, H.M. Standard Handbook of Hazardous Waste Treatment and Disposal. McGraw-Hill, New York, NY, 1989.

24. U.S. Environmental Protection Agency, Office of Water Regulations and Standards. Guidance Manual For the Use of Production-Based Pretreatment Standards and the Combined Wastestream Formula, September 1985.

25. U.S. Environmental Protection Agency, Office of Water Regulations and Standards. Guidance Manual for Electroplating and Metal Finishing Pretreatment Standards, EPA-440/1-84-091g, February 1984.

26. U.S. Environmental Protection Agency, Office of Water. NPDES Permit Writers' Manual, EPA-833-B-96-003, December 1996.

Table 15-1 (a)

Descriptive Statistics of MP&M Survey Data for Unit Operations with Square Feet as the Production-Normalizing Parameter

Unit Operation	Total Occurrences	Number of PNF Calculations	Minimum PNF (gal/ft^2)	10th PNF Percentile (gal/ft^2)	25th PNF Percentile (gal/ft^2)	Median PNF (gal/ft^2)	75th PNF Percentile (gal/ft^2)	90th PNF Percentile (gal/ft^2)	Maximum PNF (gal/ft^2)	Mean PNF (gal/ft^2)
Abrasive Blasting	91	28	0.0003	0.0008	0.003	0.026	1.04	1.6	3.9	0.59
Abrasive Blasting Rinse	61	43	0.009	0.26	0.69	1.3	2.4	5.4	40.3	3.1
Acid Treatment with Chromium	61	47	0.00004	0.001	0.008	0.009	0.04	0.09	2.1	0.08
Acid Treatment with Chromium Rinse	50	48	0.002	0.12	1.0	1.3	6.7	41.7	2,686	77
Acid Treatment without Chromium	1,724	1,569	0.000001	0.001	0.004	0.009	0.03	0.20	140	0.43
Acid Treatment without Chromium Rinse	1,422	1,406	0.0001	0.12	0.46	1.3	3.8	19.9	2,631	16.1
Adhesive Bonding	4	4	0.002	0.008	0.02	0.03	0.26	0.65	0.91	0.24
Adhesive Bonding Rinse	0	0	NA	NA	NA	NA	NA	NA	NA	NA
Alkaline Cleaning for Oil Removal	567	534	0.00002	0.002	0.013	0.01	0.023	0.24	141	1.1
Alkaline Cleaning for Oil Removal Rinse	407	401	0.0003	0.02	0.16	0.70	1.7	11.8	472	8.3
Alkaline Treatment with Cyanide	23	17	0.002	0.01	0.01	0.01	0.07	1.2	9.0	0.72
Alkaline Treatment with Cyanide Rinse	16	16	0.4	0.4	0.74	2.9	24.2	85.7	153	25.6
Anodizing with Chromium	21	17	0.001	0.006	0.01	0.01	0.01	0.03	0.20	0.023
Anodizing with Chromium Rinse	19	19	0.04	1.1	3.9	3.9	4.3	9.0	20.9	5.0
Anodizing without Chromium	81	60	0.0002	0.004	0.01	0.01	0.01	0.04	1.44	0.06
Anodizing without Chromium Rinse	72	71	0.017	0.27	1.2	3.9	5.0	16.7	938	19.1
Aqueous Degreasing	175	110	0.0001	0.003	0.009	0.04	0.45	3.8	125	2.3
Aqueous Degreasing Rinse	109	69	0.0006	0.016	0.075	0.4	3.8	15.3	2,945	48.3
Assembly/Disassembly	75	3	0.041	0.07	0.11	0.19	0.22	0.24	0.25	0.16

Table 15-1 (a) (Continued)

Unit Operation	Total Occurrences	Number of PNF Calculations	Minimum PNF (gal/ft^2)	10th PNF Percentile (gal/ft^2)	25th PNF Percentile (gal/ft^2)	Median PNF (gal/ft^2)	75th PNF Percentile (gal/ft^2)	90th PNF Percentile (gal/ft^2)	Maximum PNF (gal/ft^2)	Mean PNF (gal/ft^2)
Assembly/Disassembly Rinse	7	5	0.13	0.31	0.59	0.59	0.59	0.59	0.59	0.50
Barrel Finishing	274	44	0.0006	0.005	0.03	0.48	8.2	72	123	16.3
Barrel Finishing Rinse	103	22	0.002	0.009	0.07	1.6	2.9	5.6	81	5.7
Burnishing	21	5	0.012	0.17	0.4	0.84	2.8	39.9	64.7	13.8
Burnishing Rinse	11	1	2.07	2.07	2.07	2.07	2.07	2.07	2.07	2.07
Calibration	2	2	0.59	0.59	0.59	0.59	0.59	0.59	0.59	0.59
Chemical Conversion Coating without Chromium	459	221	0.0000025	0.0004	0.001	0.006	0.075	0.5	96.8	0.87
Chemical Conversion Coating Without Chromium Rinse	366	242	0.0001	0.04	0.16	0.74	2.7	7.1	648	12.9
Chemical Milling	111	79	0.0009	0.015	0.02	0.06	0.11	0.40	11.4	0.3
Chemical Milling Rinse	103	90	0.002	0.18	0.5	1.2	3.0	11.4	64.5	4.3
Chromate Conversion Coating	386	120	0.0000007	0.00006	0.0005	0.008	0.039	1.0	47.9	0.9
Chromate Conversion Coating Rinse	229	135	0.0028	0.016	0.13	0.60	4.3	26.2	2,000	37.2
Corrosion Preventive Coating	178	71	0.00003	0.0009	0.003	0.01	0.052	0.69	42.3	1.8
Corrosion Preventive Coating Rinse	73	61	0.0002	0.15	0.34	1.2	2.0	6.0	833	15.9
Electroless Plating	123	98	0.0002	0.001	0.003	0.02	0.09	0.8	5.9	0.34
Electroless Plating Rinse	116	103	0.005	0.17	0.64	2.2	7.3	26.1	374	17.1
Electrolytic Cleaning	146	137	0.00001	0.0005	0.003	0.013	0.08	0.70	85.7	2.4
Electrolytic Cleaning Rinse	133	132	0.0001	0.02	0.2	0.8	5.5	22.2	446	14.0
Electroplating with Chromium	73	39	0.0007	0.006	0.02	0.02	0.03	2.7	11.4	0.88
Electroplating with Chromium Rinse	77	71	0.006	0.2	1.0	2.6	13.1	38.8	943	26.7
Electroplating with Cyanide	261	121	0.00004	0.002	0.007	0.02	0.16	0.95	90.6	1.4
Electroplating with Cyanide Rinse	235	219	0.0003	0.04	0.57	2.6	16.6	80.0	1,828	38.4
Electroplating without Chromium or Cyanide	522	260	0.00001	0.0004	0.005	0.02	0.075	0.5	23.5	0.45

Table 15-1 (a) (Continued)

Unit Operation	Total Occurrences	Number of PNF Calculations	Minimum PNF (gal/ft^2)	10th PNF Percentile (gal/ft^2)	25th PNF Percentile (gal/ft^2)	Median PNF (gal/ft^2)	75th PNF Percentile (gal/ft^2)	90th PNF Percentile (gal/ft^2)	Maximum PNF (gal/ft^2)	Mean PNF (gal/ft^2)
Electroplating without Chromium or Cyanide Rinse	496	490	0.0003	0.12	0.60	2.6	10	42.1	9,333	54.7
Electropolishing	18	17	0.0002	0.01	0.01	0.01	0.03	3.7	7.7	0.92
Electropolishing Rinse	14	14	0.01	0.04	0.8	3.5	19.9	27.2	187	20.6
Floor Cleaning	388	340	0.00008	0.006	0.008	0.1	0.1	1.3	156	2.0
Floor Cleaning Rinse	75	73	0.0025	0.009	0.06	0.1	0.33	3.4	49	1.6
Flush/Fill Radiators	0	0	NA	NA	NA	NA	NA	NA	NA	NA
Heat Treating Quench	136	76	0.00002	0.02	0.12	0.12	0.12	0.6	13	0.5
Heat Treating Rinse	36	34	0.0001	0.003	0.2	0.7	1.2	4.0	781	30
Hot Dip Coating	2	1	0.91	0.91	0.91	0.91	0.91	0.91	0.91	0.91
Hot Dip Coating Rinse	1	1	0.91	0.91	0.91	0.91	0.91	0.91	0.91	0.91
Impact Deformation	50	23	0.12	0.12	0.12	0.12	0.12	6.9	6.9	1.3
Impact Deformation Rinse	8	8	0.4	0.6	0.6	0.6	20.9	41	49	13.1
Laundering	1	1	0.01	0.01	0.01	0.01	0.01	0.01	0.01	0.01
Mechanical Plating	4	4	0.013	0.021	0.034	0.097	0.185	0.24	0.282	0.122
Mechanical Plating Rinse	4	4	0.44	0.55	0.71	1.0	1.34	1.58	1.73	1.0
Metal Spray (Incl. Water Curtains)	10	4	0.03	0.30	0.69	0.91	0.91	0.91	0.91	0.69
Painting Spray (Incl. Water Curtains)	170	130	0.000062	0.002	0.02	0.04	0.04	0.10	1.52	0.08
Painting Spray Rinse	16	16	0.00025	0.01	0.04	0.12	0.80	1.3	2.5	0.49
Painting Immersion	23	12	0.00004	0.00007	0.0005	0.02	0.02	0.19	54.6	4.6
Painting Immersion Rinse	18	16	0.002	0.008	0.022	0.06	0.43	12.3	28.8	3.4
Phosphor Deposition	1	1	2.29	2.29	2.29	2.29	2.29	2.29	2.29	2.29
Phosphor Deposition Rinse	1	1	2.29	2.29	2.29	2.29	2.29	2.29	2.29	2.29
Photo Imaging Developing	125	114	0.0007	0.006	0.034	0.096	0.33	0.80	45.15	0.83
Photo Imaging Developing Rinse	113	112	0.046	0.26	1.30	1.74	2.95	7.95	65.97	4.14
Photo Resist Applications	6	4	0.001	0.002	0.003	0.012	0.25	0.66	0.93	0.24
Photo Resist Applications Rinse	2	2	0.032	2.4	5.9	11.8	17.8	21.3	23.7	11.8

Table 15-1 (a) (Continued)

Unit Operation	Total Occurrences	Number of PNF Calculations	Minimum PNF (gal/ft^2)	10th PNF Percentile (gal/ft^2)	25th PNF Percentile (gal/ft^2)	Median PNF (gal/ft^2)	75th PNF Percentile (gal/ft^2)	90th PNF Percentile (gal/ft^2)	Maximum PNF (gal/ft^2)	Mean PNF (gal/ft^2)
Physical Vapor Deposition	0	0	NA	NA	NA	NA	NA	NA	NA	NA
Physical Vapor Deposition Rinse	0	0	NA	NA	NA	NA	NA	NA	NA	NA
Plastic Wire Extrusion	0	0	NA	NA	NA	NA	NA	NA	NA	NA
Plastic Wire Extrusion Rinse	0	0	NA	NA	NA	NA	NA	NA	NA	NA
Polishing	60	33	0.0002	0.22	0.48	0.48	0.48	3.92	62	3.4
Polishing Rinse	27	24	0.0002	0.1	1.28	4.47	6.2	19.5	60	9.1
Pressure Deformation	55	37	0.105	0.12	0.12	0.12	0.12	0.12	6.9	0.48
Pressure Deformation Rinse	11	11	0.14	0.68	0.68	0.68	21.2	37.4	50.2	12.4
Salt Bath Descaling	3	2	0.12	0.12	0.12	0.12	0.12	0.12	0.12	0.12
Salt Bath Descaling Rinse	5	5	0.68	0.68	0.68	0.68	2	12.8	20	4.8
Shot Tower-Lead Shot Manufacturing	0	0	NA	NA	NA	NA	NA	NA	NA	NA
Shot Tower-Lead Shot Manufacturing Rinse	0	0	NA	NA	NA	NA	NA	NA	NA	NA
Soldering/Brazing	61	15	0.002	0.011	0.16	0.91	0.95	13.4	26.4	3.8
Soldering/Brazing Rinse	45	39	0.26	0.91	0.91	0.91	1.7	15.3	454	17.1
Solder Flux Cleaning	45	11	0.001	0.002	0.007	0.018	0.13	1.7	7.7	0.88
Solder Flux Cleaning Rinse	40	40	0.012	0.18	0.49	1.60	4.9	14.6	34	4.8
Solder Fusing	26	10	0.0005	0.004	0.007	0.01	0.04	0.51	3.7	0.40
Solder Fusing Rinse	23	23	0.07	0.32	0.50	1.2	5.8	17.8	60	6.7
Solvent Degreasing	47	9	0.013	0.013	0.013	0.013	0.028	1.17	5.2	0.013
Solvent Degreasing Rinse	26	26	0.17	0.72	0.80	0.80	2.4	30	1713	74.1
Sputtering	0	0	NA	NA	NA	NA	NA	NA	NA	NA
Sputtering Rinse	0	0	NA	NA	NA	NA	NA	NA	NA	NA
Steam Cleaning	2	2	0.013	12.5	31.26	62.5	93.8	112.5	125	62.5
Stripping Paint	162	140	0.0005	0.005	0.02	0.03	0.05	0.22	1.7	0.09
Stripping Paint Rinse	160	156	0.02	0.16	0.51	1.30	3.5	11.8	113	5.7
Stripping Metallic Coating	252	217	0.0002	0.004	0.014	0.03	0.09	0.42	61	0.72

Table 15-1 (a) (Continued)

Unit Operation	Total Occurrences	Number of PNF Calculations	Minimum PNF (gal/ft^2)	10th PNF Percentile (gal/ft^2)	25th PNF Percentile (gal/ft^2)	Median PNF (gal/ft^2)	75th PNF Percentile (gal/ft^2)	90th PNF Percentile (gal/ft^2)	Maximum PNF (gal/ft^2)	Mean PNF (gal/ft^2)
Stripping Metallic Coating Rinse	214	209	0.003	0.22	0.65	2.1	9.6	40	5954	67
Testing	256	231	0.0004	0.59	0.59	0.59	0.59	0.75	79.5	2.2
Testing Rinse	69	69	0.01	0.15	0.59	0.59	0.95	6.8	1197	22.5
Thermal Cutting	22	8	0.12	0.18	0.20	0.64	0.91	0.91	0.90	0.57
Thermal Infusion	1	1	0.91	0.91	0.91	0.91	0.91	0.91	0.91	0.91
Thermal Infusion Rinse	0	0	NA	NA	NA	NA	NA	NA	NA	NA
Ultrasonic Machining	0	0	NA	NA	NA	NA	NA	NA	NA	NA
Ultrasonic Machining Rinse	0	0	NA	NA	NA	NA	NA	NA	NA	NA
Vacuum Impregnation	4	1	4.5	4.5	4.5	4.5	4.5	4.5	4.5	4.5
Vacuum Impregnation Rinse	2	2	1.9	1.9	14	26	38.3	45.5	50.4	26
Vacuum Plating	0	0	NA	NA	NA	NA	NA	NA	NA	NA
Vacuum Plating Rinse	0	0	NA	NA	NA	NA	NA	NA	NA	NA
Washing Finished Products	299	250	0.00002	0.007	0.013	0.01	0.20	3.8	941	6.4
Washing Finished Products Rinse	123	119	0.002	0.02	0.08	0.70	0.83	3.0	78.9	2.6
Water Shedder	0	0	NA	NA	NA	NA	NA	NA	NA	NA
Water Shedder Rinse	0	0	NA	NA	NA	NA	NA	NA	NA	NA
Welding	95	26	0.00004	0.003	0.28	0.90	0.91	3.71	12.5	1.6
Welding Rinse	6	6	0.01	0.16	0.32	0.62	11	22.5	30.7	7.8

NA - Not applicable.

Table 15-1 (b)

Descriptive Statistics of MP&M Survey Data for Unit Operations with Pounds of Metal Removed as the Production-Normalizing Parameter

Unit Operation	Total Occurrences	Number of PNF Calculations	Minimum PNF (gal/lb met rem)	10th Percentile (gal/lb met rem)	25th Percentile (gal/lb met rem)	Median PNF (gal/lb met rem)	75th Percentile (gal/lb met rem)	90th Percentile (gal/lb met rem)	Maximum PNF (gal/lb met rem)	Mean PNF (gal/lb met rem)
Abrasive Jet Machining	6	6	0.0009	0.003	0.009	0.02	0.02	0.04	0.06	0.02
Abrasive Jet Machining Rinse	0	0	NA	NA	NA	NA	NA	NA	NA	NA
Electrical Discharge Machining	34	12	0.04	0.16	0.65	1.7	4.4	14.9	450	40.4
Electrical Discharge Machining Rinse	3	2	1	1.08	1.2	1.4	1.6	1.7	1.8	1.4
Grinding	511	427	0.0003	0.033	0.093	0.12	0.64	5.6	36000	247
Grinding Rinse	47	40	0.0007	0.2	20.7	318	1551	6370	291800	466
Machining	1369	1143	0.0003	0.11	0.05	0.12	0.18	1.7	376	1.6
Machining Rinse	21	19	0.001	0.02	0.09	0.7	319	338	376	109
Plasma Arc Machining	37	25	0.35	2	2	2	2	2.6	22	2.9

NA - Not applicable.

Table 15-2

Water Conservation Methods for Surface Treatment Rinses

Practice	Alkaline Clean	Acid Clean	Hexavalent Chromium	Trivalent Chromium	Cadmium Zinc Cyanide	Cadmium Zinc Non-Cyanide	Acid Copper	Copper Cyanide	Watts, Woods, Other Nickels	Electro-less Nickel	Silver Cyanide	Gold Cyanide	Lead, Lead-Tin	Tin	Chrom-ate	Phos-phate	Chromic-Acid Anodize	Sulfuric Anodize
Drag-out Reduction and Recovery																		
Fog or spray rinsing over tank (110^{E} F or higher)	T	T	T	T				T	T	T				T[a]		T	T	
Controlled slow withdrawal	T	T	T	T	T	T	T	T	T	T	T	T	T	T	T	T	T	T
Addition of wetting agent (when compatible)			T	T	T	T	T	T	T	T	T	T	T	T	T	T	T	T
Positioning work piece	T	T	T	T	T	T	T	T	T	T	T	T	T	T	T	T	T	T
Long drip time	T	T	T	T	T	T	T	T			T	T	T	T	T	T	T	T
Drip shield	T	T	T	T	T	T	T	T	T	T	T	T	T	T	T	T	T	T
Air knife	T	T	T	T	T	T					T	T			T	T		T
Drag-out tank (heated)	T		T	T	T	T	T	T	T	T	T	T	T	T	T	T		
Drag-in/out tank	T		T	T	T	T	T	T	T	T	T	T	T	T	T	T		
Lowest concentration	T	T	T	T	T	T	T	T	T	T	T	T	T	T	T	T	T	T
Highest temperature	T	T	T	T	T	T		T	T	T	T	T	T	T	T	T	T	T
Rinse Tank Design and Innovative Configuration																		
Countercurrent rinse	T	T	T	T	T	T	T	T	T	T	T	T	T	T	T	T	T	T
Cascading rinse (cleaning)	T	T																
Spray rinse	T	T	T	T	T	T	T	T	T	T	T	T	T	T	T	T	T	T
Good tank design[b]	T	T	T	T	T	T	T	T	T	T	T	T	T	T	T	T	T	T

Table 15-2 (Continued)

Practice	Alkaline Clean	Acid Clean	Hexavalent Chromium	Trivalent Chromium	Cadmium Zinc Cyanide	Cadmium Zinc Non-Cyanide	Acid Copper	Copper Cyanide	Watts, Woods, Other Nickels	Electro-less Nickel	Silver Cyanide	Gold Cyanide	Lead, Lead-Tin	Tin	Chrom-ate	Phos-phate	Chromic-Acid Anodize	Sulfuric Anodize
Rinse Water Use Control																		
Flow restrictors	T	T	T	T	T	T	T	T	T	T	T	T	T	T	T	T	T	T
Timer controls	T	T	T	T	T	T	T	T	T	T	T	T	T	T	T	T	T	T
Conductivity controls	T	T	T	T	T	T	T	T	T	T	T	T	T	T	T	T	T	T
Metal Recovery and Rinse Water Reuse Technologies																		
Evaporator[c]	T	T	T	T	T	T	T	T	T	T			T	T	T	T	T	
Ion exchange[c]					T	T	T	T	T	T	T	T	T	T				
Electrolytic Recovery					T	T	T	T	T	T	T	T						
Electrodialysis[c]		T			T	T			T									
Reverse osmosis[c]					T	T	T	T	T				T	T	T			

Source: MP&M Site Visits, MP&M surveys, Technical Literature.
[a]Alkaline tin only.
[b]For example: Air or other agitation, minimum size, and inlet, outlet location opposite ends.
[c]Only common applications of this technology are checked.

Table 15-3

Definitions of Pollution Prevention and Water Conservation Practices and Technologies

Practice or Technology	Definition
Air Knife	Air knives are usually installed over a process tank or drip shield and are designed to remove drag-out by blowing it off the surface of parts and racks. Drag-out is routed back to the process tank. Air knives are more effective with flat parts. Air knives cannot be used to dry surfaces that passivate or stain due to oxidation.
Cascade Rinse	Cascade rinsing is a method of reusing rinse water. Rinse water from one rinsing operation is plumbed to another, less critical one before being discharged to treatment. Some rinse waters acquire chemical properties, such as low pH, that make them desirable for reuse in specific rinse systems. This is generally referred to as reactive rinsing.
Conductivity Controller	Conductivity probes measure the conductivity of water in a rinse tank to regulate the flow of fresh rinse water into the rinse system. Conductivity controllers consist of a controller, a meter with adjustable set points, a probe that is placed in the rinse tank, and a solenoid valve. As parts are rinsed, dissolved solids are added to the water in the rinse tank, raising the conductivity of the water. When conductivity reaches the set point, the solenoid valve is opened to allow make-up water to enter the tank. When the conductivity falls below the set point, the valve is shut to discontinue the make-up water. In theory, conductivity control of rinse flow is a precise method of maintaining optimum rinsing conditions in intermittently used rinse operations. In practice, conductivity controllers work best with deionized rinse water. Incoming water conductivity may vary day to day and season to season, which forces frequent set-point adjustments. Suspended solids and nonionic contaminants (e.g., oil) are not detected by the conductivity probe and can cause inadequate rinsing.
Countercurrent Cascade Rinse	Countercurrent cascade rinsing refers to a series of consecutive rinse tanks that are plumbed to cause water to flow from one tank to another in the direction opposite of the work flow. Countercurrent cascade rinsing is widely used to reduce the discharge rate of rinse water. Fresh water flows into the rinse tank located farthest from the process tank and overflows, in turn, to the rinse tanks closer to the process tank. This technique is termed countercurrent rinsing, because the work piece and the rinse water move in opposite directions. Over time, the first rinse becomes contaminated with drag-out and reaches a stable concentration that is lower than the process solution. The second rinse stabilizes at a lower concentration, which enables less rinse water to be used than if only one rinse tank were in place. The more countercurrent cascade rinse tanks (three-stage, four-stage, etc.), the less water is needed to adequately remove the process solution.

Table 15-3 (Continued)

Practice or Technology	Definition
Drag-in/Drag-out Rinsing	A drag-in/drag-out rinse system may be a single tank or two tanks plumbed together. Parts enter the rinse system before and after processing in the bath. As parts enter the process bath, they drag in process chemicals present in the drag-in/drag-out rinse rather than plain rinse water. This rinsing configuration is an effective recovery method for process baths that have low evaporation rates.
Drag-out Tank	Drag-out tanks are rinse tanks that are initially filled with water and remain stagnant. Parts are rinsed in drag-out tanks directly after exiting the process bath. Gradually, the concentration of process chemicals in the drag-out tank rises. In the most efficient configuration, a drag-out tank is used after a heated process tank that has a moderate to high evaporation rate. Part of the fluid in the drag-out tank is returned to the process tank to replace the evaporative loss. The level of fluid in the drag-out tank is maintained by adding fresh water.
Drip Shields	Drip shields are installed between process tanks and rinse tanks to recover process fluid dripping off racks and barrels that would otherwise fall into rinse tanks or onto the floor. Often, drip shields are an inclined piece of polypropylene or other material that is inert to the process.
Drip Tanks	Drip tanks are similar to drag-out tanks except they are not filled with water. Parts exiting a process bath are held over the drip tank and the process fluid that drips from the parts is collected in the tank. When enough fluid is collected in the drip tank, it is returned to the process tank. Drip tanks are generally considered to be a less effective drag-out recovery practice than using drag-out tanks.
Electrodialysis	Electrodialysis is a membrane technology used to remove impurities from and recover process solutions. With this technology, a direct current is applied across a series of alternating anion and cation exchange membranes to remove dissolved metal salts and other ionic constituents from solutions. An electrodialysis unit consists of a rectifier and a membrane stack. The stack consists of alternating anion- and cation-specific membranes that form compartments. As the feed stream enters the unit, each alternating membrane compartment becomes filled with either diluate or concentrate. When the compartments are filled, a direct current is applied across the membrane. Cations in a diluate compartment traverse one cation-specific membrane in the direction of the cathode, and are trapped in that compartment by the next membrane, which is anion-specific. Anions from the neighboring diluate compartment traverse the anion-specific membrane in the direction of the anode, joining the cations, and are likewise trapped in the concentrate compartment by the next cation-specific membrane. In this way, the feed stream is depleted of ions, and anions and cations are trapped in each concentrate compartment. The feed stream is often from the first rinse tank in a countercurrent series, with a concentration of 5 g/L or more of TDS. The concentrate, with a TDS concentration of 50 g/L or more, and a volume of less than 10% of the feed stream, is returned to the process. The diluate, representing more than 90% of the feed stream at a TDS concentration of typically 1 g/L or less, is recycled as rinse water or discharged to treatment.

Table 15-3 (Continued)

Practice or Technology	Definition
Electrolytic Recovery (Electrowining)	Electrolytic recovery is an electrochemical process used to recover metals from many types of process solutions, such as electroplating rinse waters and baths. Electrolytic recovery removes metal ions from a wastestream by processing the stream in an electrolytic cell, which consists of a closely spaced anode and cathode. Commercial equipment consists of several cells, a transfer pump, and a rectifier. Current is applied across the cell and metal cations are deposited on the cathodes. The wastestream is usually recirculated through the cell from a separate tank, such as a drag-out recovery rinse. Electrolytic recovery is typically applied to solutions containing nickel, copper, precious metals, and cadmium. Chromium and aluminum are poor candidates for electrolytic recovery. Drag-out recovery rinses and ion-exchange regenerant are common solutions that are processed using electrolytic recovery. Some solutions require pH adjustment prior to electrolytic recovery. Acidic, metal-rich, cation regenerant is an excellent candidate stream for electrolytic recovery, and is often electrolytically recovered without adjustment. In some cases, when the target concentration is reached, the wastestream is reused as cation regenerant.
Evaporation	Evaporation is a common chemical recovery technology. There are two basic types of evaporators: atmospheric and vacuum. Atmospheric evaporators, the more prevalent type, are relatively inexpensive to purchase and easy to operate. Vacuum evaporators are mechanically more sophisticated and are more energy efficient. Vacuum evaporators are typically used when evaporation rates greater than 50 to 70 gal/hour are required. Additionally, with vacuum evaporators, evaporated water can be recovered as a condensate and reused on site. A disadvantage of evaporation-based recovery is that all drag-out, including unwanted components, are returned and accumulate in the process bath. For this reason, deionized water is preferred as rinse water to prevent the introduction of water contaminants in the process bath.
Flow Restrictor	Flow restrictors prevent the flow in a pipe from exceeding a predetermined volume. They are commonly installed on a rinse tank's water inlet. These devices contain an elastomer washer that flexes under pressure to maintain a constant water flow regardless of pressure. Flow restrictors can maintain a wide range of flow rates, from less than 0.1 gal/min to more than 10 gal/min. As a stand-alone device, a flow restrictor provides a constant water flow. As such, for intermittent rinsing operations, a flow restrictor does not coordinate the rinse flow with drag-out introduction. Precise control with intermittent operations typically requires a combination of flow restrictors and rinse timers. However, for continuous rinsing (e.g., continuous electroplating machines), flow restrictors may be adequate for good water control.
Fog or Spray Rinse Over Tank	Fog or spray rinsing is performed over a process bath to recover drag-out. Draining over a process bath can be greatly enhanced by spray or fog rinsing, which dilutes and lowers the viscosity of the film of process fluid clinging to the parts. This method of drag-out recovery is only possible if the evaporation rate of the process fluid is moderate to high.

Table 15-3 (Continued)

Practice or Technology	Definition
Good Tank Design	Rinse tanks should be designed to remove the drag-out layer from the part and cause it to rapidly and thoroughly mix with the rinse water. Common elements of good tank design are positioning the inlet and outlet at opposite ends of the tank, using air or other agitation, using a flow distributor, and using the minimum size of tank possible.
Ion Exchange	Ion exchange is a reversible chemical reaction that exchanges ions in a feed stream for ions of like charge on the surface of an ion-exchange resin. Resins are broadly divided into cationic or anionic types. Typical cation resins exchange H^+ for other cations, while anion resins exchange OH^- for other anions. In practice, a feed stream is passed through a vessel, referred to as a column, which holds the resin. The feed stream is typically dilute rinse water. The exchange process proceeds until the capacity of the resin is reached (i.e., an exchange has occurred at all the resin sites). A regenerant solution is then passed through the column. For cation resins, the regenerant is an acid, and the H^+ ions replace the cations captured from the feed stream. For anion resins, the regenerant is a base, and OH^- ions replace the anions captured from the feed stream. The concentration of feed stream ions is much higher in the regenerant than in the feed stream; therefore, the ion-exchange process accomplishes both separation and concentration. Ion exchange is used for water recycling and/or metal recovery. For water recycling, cation and anion columns are placed in series. The feed stream is deionized and the product water is reused for rinsing. Often, closed-loop rinsing is achieved. The regenerant from the cation column typically contains the metal species, which can be recovered in elemental form via recovery. The anion regenerant is typically discharged to wastewater treatment. When metal recovery is the only objective, a single or double cation column unit containing selective resin is used. These resins attract divalent cations while allowing monovalent cations to pass, a process usually referred to as metal scavenging. Water cannot be recycled because contaminants other than the target cations remain in the stream exiting the column.
Long Drip Time	Long drip times over the process tank reduce the volume of drag-out reaching the rinsing system. Automatic lines can be easily programmed to include optimum drip times. On manual lines, racks are commonly hung on bars over process baths and allowed to drip. Barrels can be rotated over the process bath to enhance drainage. Some surfaces cannot tolerate long exposure to air due to oxidation or staining, and would therefore be unsuitable for extended drip times.
Raising Bath Temperature	Bath temperature and viscosity are inversely related. Operating at the highest possible bath temperature lowers viscosity and reduces drag-out. Higher bath temperatures also increase evaporation, which facilitates efficient recovery rinsing.
Lowering Bath Concentration	Operating at the lowest possible concentration reduces the mass of chemicals in a given volume of drag-out. Also, viscosity and concentration are directly related and lower process bath concentration lowers viscosity and reduces drag-out volume. Contaminants and other substances that build in concentration over the life of a process bath should be controlled at a low level, if possible.

Table 15-3 (Continued)

Practice or Technology	Definition
Part Position on Rack	Positioning parts on racks to promote rapid draining includes minimizing the profile of the parts emerging from the bath, tilting and inverting cup-shaped parts, and avoiding placement of parts directly atop one another.
Slow Part Withdrawal	The faster a part is removed from a process bath, the thicker the layer of fluid clinging to the part will be. A slower withdrawal rate reduces the thickness of the fluid layer and reduces drag-out. Generally, this method of drag-out reduction can only be practiced on automatic lines where the withdrawal velocity can be programmed.
Reverse Osmosis	Reverse osmosis is a membrane separation technology used for chemical recovery. The feed stream, usually relatively dilute rinse water or wastewater, is pumped to the surface of the reverse osmosis membrane at pressures of 400 to 1,000 psig. The membrane separates the feed stream into a reject stream and a permeate. The reject stream, containing most of the dissolved solids in the feed stream, is deflected from the membrane while the permeate passes through. Reverse osmosis membranes reject more than 99% of multivalent ions and 90% to 96% of monovalent ions, in addition to organic pollutants and nonionic dissolved solids. The permeate stream is usually of sufficient quality to be recycled as rinse water, despite the small percentage of monovalent ions (commonly potassium, sodium and chloride) that pass through the membrane. A sufficiently concentrated reject stream can be returned directly to the process bath. The reject stream concentration can be increased by recycling the stream through the unit more than once or by increasing the feed pressure. In multiple-stage units containing more than one membrane chamber, the reject stream from the first chamber is routed to the second, and so on. The combined reject streams from multistage units may, in some cases, have high enough concentrations to be returned directly to the bath.
Timer Rinse Controller	Rinse timers are electronic devices that control a solenoid valve. The timer usually consists of a button that, when pressed, opens the valve for a predetermined length of time, usually from 1 to 99 minutes. When the valve is open, make-up water is allowed to flow into a given tank. After the time period has expired, the valve is automatically shut. The timer may be activated either manually by the operator or automatically by the action of racks or hoists. Most rinse systems that are used intermittently benefit from the installation of a rinse timer, as operator error is eliminated. Rinse timers installed in conjunction with flow restrictors can provide precise control when the incoming water pressure may rise and fall. Rinse timers are less effective in continuous or nearly continuous rinse operations (e.g., continuous electroplating machines).
Wetting Agents	Wetting agents or surfactants may be added to some process baths to reduce viscosity and surface tension, thereby significantly reducing drag-out.

Source: MP&M Site Visits, MP&M Surveys, Technical Literature.

Table 15-4

Factors Affecting Drag-Out

Factor Affecting Drag-Out	Impact on Drag-out	Potential Pollution Prevention and Water Conservation Practices	Restrictions
Bath Concentration	Concentration and drag-out are directly related.	Operate at lowest concentration possible. Remove all contaminants promptly.	Concentration range limited by process.
Bath Temperature	Higher temperatures lower drag-out by lowering viscosity.	Operate at highest possible temperature.	Temperature range limited by process.
Bath Viscosity	High viscosity raises drag-out by increasing the thickness of the fluid layer clinging to the part.	Operate at highest temperature and lowest concentration possible. Add wetting agent.	Concentration and temperature ranges limited by process. Wetting agent must be compatible.
Part Configuration	Cup shapes result in 8-20 times the drag-out volume of flat shapes.	Drain holes can be added to many cup-shaped parts to improve drainage of drag-out.	Functionality of parts may restrict use of drain holes or other changes to part configuration.
Part Orientation	Orientation on rack can be optimized to minimized drag-out.	Keep records of optimal orientations. Train operators.	None.
Withdrawal Rate	Doubling speed of withdrawal results in a fourfold increase in drag-out volume.	Program automatic equipment for slow withdrawal.	Impossible to consistently practice without automation.
Drain Time	Long drain times and barrel rotations greatly reduce drag-out.	Program automatic equipment for long drain times.	Impossible or difficult to consistently practice without automation. Drain time limited by staining or passivation of some coatings.
Rack versus Barrel	Barrels produce greater drag-out than racks.	(See “Rack/Barrel Design)	Part transport device is dictated by part size.
Rack/Barrel Design	Drag-out volume is related to barrel design.	Redesign barrels with largest holes possible.	Barrel design limited by part sizes and configurations.
Rack/Barrel Condition	Loose rack coating cause reservoirs of fluid to be transported with rack.	Maintain a schedule of maintenance and recoating.	None
Operator Awareness	Poor operator awareness greatly increases drag-out or offsets other practices.	Require training programs for operators.	None

Source: MP&M Site Visits, MP&M Surveys, Technical Literature.

Table 15-5

Rinse-water Required for Various Plating Processes Based on Literature Values[a]

Process	Rinse Configuration	TDS Concentration	Target TDS Concentration in Rinse	Part Type	Drag-out Rate	PNF gal/ft^2 100% Control	PNF gal/ft^2 100% Excess
Acid Zinc	Single overflow	166 g/L	Functional: 100-700 mg/L (used 400 mg/L)	Flat	1.3 gal/1,000 ft^2	0.54	1.1
				Contoured	3.5 gal/1,000 ft^2	1.5	2.9
	2-stage countercurrent cascade	166 g/L	Functional: 100-700 mg/L (used 400 mg/L)	Flat	1.3 gal/1,000 ft^2	0.024	0.048
				Contoured	3.5 gal/1,000 ft^2	0.072	0.14
Silver Cyanide	Single overflow	370 g/L	Bright: 5-40 mg/L (used 20 mg/L)	Flat	1.2 gal/1,000 ft^2	22	44
				Contoured	3.2 gal/1,000 ft^2	58	120
	2-stage countercurrent cascade	370 g/L	Bright: 5-40 mg/L (used 20 mg/L)	Flat	1.2 gal/1,000 ft^2	0.16	0.32
				Contoured	3.2 gal/1,000 ft^2	0.43	0.87

Table 15-5 (Continued)

Process	Rinse Configuration	TDS Concentration	Target TDS Concentration in Rinse	Part Type	Drag-out Rate	PNF gal/ft^2 100% Control	PNF gal/ft^2 100% Excess
Copper Cyanide	Single overflow	250 g/L	Functional: 100-700 mg/L (used 400 mg/L)	Flat	0.91 gal/1,000 ft^2	0.57	1.1
				Contoured	3.2 gal/1,000 ft^2	2.0	4.0
	2-stage countercurrent cascade	250 g/L	Functional: 100-700 mg/L (used 400 mg/L)	Flat	0.91 gal/1,000 ft^2	0.023	0.046
				Contoured	3.2 gal/1,000 ft^2	0.081	0.16
Acid Descale	Single Overflow	248 g/L	Clean: 400-1000 mg/L (used 700 mg/L)	Flat	1 gal/1,000 ft^2 (estimated)	3.5	7.1
				Contoured	3 gal/1,000 ft^2 (estimated)	11	21
	2-stage countercurrent cascade	248 g/L	Clean: 400-1000 mg/L (used 700 mg/L)	Flat	1 gal/1,000 ft^2 (estimated)	0.019	0.038
				Contoured	3 gal/1,000 ft^2 (estimated)	0.056	0.11

Table 15-5 (Continued)

Process	Rinse Configuration	TDS Concentration	Target TDS Concentration in Rinse	Part Type	Drag-out Rate	PNF gal/ft^2 100% Control	PNF gal/ft^2 100% Excess
Alkaline Clean (Proprietary Chemistry)	Single overflow	90 g/L	Clean: 400-1000 mg/L (used 700 mg/L)	Flat	1 gal/1,000 ft^2 (estimated)	0.13	0.26
				Contoured	3 gal/1,000 ft^2 (estimated)	0.39	0.77
	2-stage countercurrent cascade	90 g/L	Clean: 400-1000 mg/L (used 700 mg/L)	Flat	1 gal/1,000 ft^2 (estimated)	0.011	0.022
				Contoured	3 gal/1,000 ft^2 (estimated)	0.033	0.066

[a]TDS concentrations are from References 3 and 4, based on bath formulations. Target TDS concentrations are based on criteria presented in Section 3.2.1 (Reference 1). Drag-out rates are from References 1 and 2 unless data were not available, in which case rates were assumed based on technical knowledge of the operations.

Sources: References 1, 3, and 4.

1. Acid zinc formulation:

$ZnSO_4(7H_2O)$	240 g/L
NH_4Cl	15 g/L
$Al_2(SO_4)_3(18H_2O)$	30 g/L
Licorice	1 g/L

2. Equation used to calculate rinse flow and flow per square foot for single overflow rinse:

$$C_e = \left(\frac{D}{QM + D}\right) C_o$$

$$Q = \frac{\left(\frac{DC_o}{C_e}\right) - D}{M}$$

Solving for Q:
Where:

D	=	Drag-out per ft^2 (gal)	C_e	=	Target concentration of rinse (oz/gal)
C_o	=	Concentration of process bath (oz/gal)	C_r	=	Target concentration of final rinse (oz/gal)
M	=	Interval between drag-out events (minutes)	Q	=	Flow (gal/min)

Note: Any interval M can be chosen. Q, when divided by the work rate, ft^2/M, yields the gal/ft^2 in the table and the gal/ft^2 number remains the same for any M.

3. Equation used to calculate 100% controlled flow and gallons per square foot for countercurrent cascade rinse:

$$Q = \frac{D}{M}\left(\frac{C_o}{C_r}\right)^{1/n}$$

Where n = number of rinse stages

For 50% controlled flow, Q was multiplied by a factor of 2.

With 100% controlled flow, the introduction of drag-out and rinsewater into the rinse tank are perfectly coordinated and, therefore, the rinsewater required to meet the target concentration of the final rinse is equal to Q. With 100% excess flow, the introduction of drag-out and rinsewater are not perfectly coordinated and an excess of 100% of Q (or 2Q) is used to meet the target concentration of the final rinse.

4. Silver cyanide formulation (middle of high-speed bath range):

AgCN	97.5 g/L
KCN	152.5 g/L
K_2CO_3	52.5 g/L
KNO_3	50 g/L
KOH	17 g/L

5. High-efficiency copper cyanide formulation:

CuCN	75 g/L
KCN	133 g/L
KOH	42 g/L

6. Acid descale formulation:

20% H_2NO_3 (by volume)
1.5% HF (by volume)

All bath formulations and equations are from References 1, 3, and 4.

Table 15-6

Adjusted Production-Normalized Flow (PNF) Data for Countercurrent Cascade-Rinses

Measured PNF (gal/ft^2)	Measured TDS (mg/L)	Adjusted TDS (mg/L)[a]	Adjusted PNF (gal/ft^2)[b]	Part Description
CLEANING RINSES WITH FLOW CONTROL (Includes timed rinses, conductivity sensors, flow restrictors, and manual shut-off)				
0.031	1,600	700	0.047	Doorknob components
0.037	1,800	700	0.059	Doorknob components
0.054	1,700	700	0.084	Doorknob components
0.26	1,300	700	0.36	Doorknob components
0.26	2,000	700	0.44	Doorknob components
0.26	1,100	700	0.33	Doorknob components
0.30	1,100	700	0.37	Doorknob components
0.38	1,100	700	0.48	Doorknob components
0.49	1,400	700	0.69	Doorknob components
0.49	940	700	0.56	Doorknob components
0.62	1,200	700	0.81	Doorknob components
0.62	860	700	0.68	Doorknob components
PLATING AND CONVERSION COATING RINSES WITH FLOW CONTROL (Includes timed rinses, conductivity meters, flow restrictors, and manual shut-off)				
0.017	400	3,900	0.15	Shafts for mobile industrial equipment
0.037	400	4,100	0.350	Shafts for mobile industrial equipment
0.16	400	4,100	1.5	Shafts for mobile industrial equipment
0.83	720	400	0.350	Doorknob Components
1.5	730	400	1.5	Doorknob components

Source: Sampling episode data from two MP&M sites.
[a]Adjusted TDS based on rinsing criteria presented in Section 3.1.2 (Reference 1).
[b]The adjusted PNFs account for the fact that the TDS was measured from the discharge of first tank in the countercurrent cascade series. EPA assumes the TDS present in the measured rinse is entirely composed of drag-out and that the rinse water supplied is deionized.

Table 15-7

Pollution Prevention and Water Conservation Methods Applicable to Machining Operations

Pollution Prevention/Water Conservation Method	Examples	Applicability
Prevention of Metal-Working Fluid Contamination		
Reduce contamination from tramp oil	Use coolant in hydraulic and other oil systems.	Applicable to most machines. In most cases, requires use of special fluid.
	Replace hydraulics with electrical systems.	Limited applicability. Practical only during major equipment overhaul.
	Machine maintenance.	Applicable to all machines. Should be performed at regularly scheduled intervals.
Reduce contamination from make-up water	Use deionized water for initial make-up of working fluid and to account for evaporative losses.	Applicable to all machining operations using a water-soluble fluid. Especially important in areas where the water supply is high in TDS.
Reduce contamination from sumps	Sterilize sumps during clean-out using steam.	Applicable to all machining operations. Especially important with large concrete sumps.
	Use metal inserts or coat walls of concrete sumps.	Applicable to in-ground concrete sumps.
Extension of Metal-Working fluid Life		
Raw material substitution	Use high quality fluids with needed “additive package.”	Most machining operations can benefit from the use of high-quality fluids that can extend fluid life, while reducing bacterial growth, improving lubricity, reducing friction, and providing corrosion protection.

Table 15-7 (Continued)

Pollution Prevention/Water Conservation Method	Examples	Applicability
Equipment modification	Replace sump's air agitation with mechanical agitation.	Applicable to central sumps with air agitation.
	Install tramp oil removal device.	Limited mainly to external sumps.
Fluid Monitoring	Measure pH, coolant concentration, tramp oil concentration, and bacterial count weekly or more frequently.	Applicable to all machining operations. Larger operations can use data for statistical process control.
Metal-working fluid recycling	Use methods and technologies for removing fluid contaminants (e.g., filtration, centrifuge, pasteurization).	Simple filtration methods can be used by all machining operations. More sophisticated equipment is limited to larger operations.
	Recycle chip drainage.	Applicable to all machining operations. Requires clean handling and storage methods to prevent contamination.

Source: MP&M Site Visits, MP&M Surveys, Technical Literature.

Table 15-8

Pollution Prevention and Water Conservation Methods Applicable to Painting Operations

Pollution Prevention/Water Conservation Method	Examples	Applicability
Reduce the Quantity of Paint Entering the Water System		
Improve spray painting operating practices	Provide operator training to improve racking and positioning of parts to reduce over spray, assure proper selection of nozzle for efficient spray pattern, improve work scheduling and reduce clean-outs, improve housekeeping.	Applicable to all spray painting operations.
Improve paint transfer efficiency	Replace inefficient conventional compressed air spray equipment with high-velocity/low-pressure equipment.	Applicable to most existing spray painting operations using conventional equipment. Will require some retraining of operators.
Install gun cleaning station	Use gun-cleaning station to clean guns and lines. Can prevent spraying of cleaning fluid/paint into booth.	Applicable to most solvent-based painting operations.
Recycle Paint Booth Water		
Recycle paint booth water through solids removal	Use booth water maintenance system that removes paint solids. Applicable technologies include weirs, filters, and centrifuges.	Applicable to most water-wash booths. Usually requires treatment of booth water with chemicals to produce solids that can be separated from water.
Use Dry-Filter Booths		
Use dry-filter booths instead of water-wash booths	Convert existing water-wash booth to a dry-filter booth.	Applicable to booths with low to moderate paint usage. In cases of high paint usage, dry filters clog too quickly.

Source: MP&M Site Visits, MP&M Surveys, Technical Literature.

Table 15-9

Pollution Prevention and Water Conservation Methods Applicable to Cleaning Operations

Pollution Prevention/Water Conservation Method	Examples	Applicability
Housekeeping and maintenance	Check the accuracy of temperature controls; remove sludge build-up from tanks, heat coils and temperature regulators; retrieve parts, racks, etc. dropped into the tanks; and check the integrity of tanks and tank liners.	Applicable to all cleaning operations.
Oil and suspended solids removal	Technologies used to remove oil and suspended solids from cleaning solutions, thereby extending the useful life span of the solutions (e.g., skimmers, coalescers, cartridge and membrane filters).	Suspended solids removal equipment (e.g., cartridge filters) are applicable to nearly all baths. The other types of equipment are applicable to most or all alkaline cleaning baths.
Dissolved solids removal	Various technologies and processes that remove dissolved metals from baths, including acid sorption, diffusion dialysis, and membrane electrolysis.	Applicable to acid and alkaline solutions that become contaminated with dissolved metal, usually due to etching of the basis metal.

Source: MP&M Site Visits, MP&M Surveys, Technical Literature.

16.0 GLOSSARY/LIST OF ACRONYMS

Act - The Clean Water Act.

Administrator - The Administrator of the U.S. Environmental Protection Agency.

Agency - U.S. Environmental Protection Agency (also referred to as "EPA").

AWQC - Ambient Water Quality Criteria.

BAT - Best available technology economically achievable, as defined by section 304(b)(2)(B) of the Clean Water Act.

BCT - Best conventional pollutant control technology, as defined by section 304(b)(4) of the Clean Water Act.

BMP - Best management practices, as defined by section 304(e) of the Clean Water Act or as authorized by section 402 of the Clean Water Act**.**

BOD_5 - Five-day biochemical oxygen demand. A measure of biochemical decomposition of organic matter in a water sample. It is determined by measuring the dissolved oxygen consumed by microorganisms to oxidize the organic contaminants in a water sample under standard laboratory conditions of five days and 20EC. BOD_5 is not related to the oxygen requirements in chemical combustion.

BPT - Best practicable control technology currently available, as defined by section 304(b)(1) of the Clean Water Act.

CAA - Clean Air Act (42 U.S.C. 7401 *et seq*., as amended *inter alia* by the Clean Air Act Amendments of 1990 (Pub. L. 101-549, 104 stat. 2394)).

CBI - Confidential Business Information.

CE - Cost effectiveness.

CFR - Code of Federal Regulations, published by the U.S. Government Printing Office. A codification of the general and permanent rules published in the Federal Register by the executive departments and agencies of the federal government.

COD - Chemical oxygen demand. A nonconventional, bulk parameter that measures the oxygen-consuming capacity of refractory organic and inorganic matter present in water or wastewater. COD is expressed as the amount of oxygen consumed from a chemical oxidant in a specific test (see Method 410.1).

Contract Hauling - The removal of any waste stream from the facility by a company authorized to transport and dispose of the waste, excluding discharges to sewers or surface waters.

Control Authority - The term "control authority" as used in section 403.12 refers to: (1) The POTW if the POTW's submission for its pretreatment program (§403.3(t)(1)) has been approved in accordance with the requirements of §403.11; or (2) the approval authority if the submission has not been approved.

Conventional Pollutants - The pollutants identified in section 304(a)(4) of the Clean Water Act and the regulations thereunder (i.e., biochemical oxygen demand (BOD_5), total suspended solids (TSS), oil and grease, fecal coliform, and pH).

CWA - Clean Water Act. The Federal Water Pollution Control Act Amendments of 1972 (33 U.S.C. 1251 *et seq*.), as amended, *inter alia*, by the Clean Water Act of 1977 (Public Law 95-217) and the Water Quality Act of 1987 (Public Law 100-4).

DAF - Dissolved air flotation.

Direct Capital Costs - One-time capital costs associated with the purchase, installation, and delivery of a specific technology. Direct capital costs are estimated by the MP&M cost model.

Direct Discharger - An industrial discharger that introduces wastewater to a water of the United States with or without treatment by the discharger.

EEBA - Economic, Environmental, and Benefits Analysis of the Proposed Metal Products & Machinery Rule. This document presents the methodology employed to assess economic and environmental impacts and benefits of the proposed rule and the results of the analysis.

Effluent - Wastewater discharges.

Effluent Limitation - A maximum amount, per unit of time, production, volume, or other unit, of each specific constituent of the effluent from an existing point source that is subject to limitation. Effluent limitations may be expressed as a mass loading or as a concentration in milligrams of pollutant per liter discharged.

Emission - Passage of air pollutants into the atmosphere via a gas stream or other means.

End-of-Pipe Treatment (EOP) - Refers to those processes that treat a facility waste stream for pollutant removal prior to discharge.

EPA - The U.S. Environmental Protection Agency (also referred to as "the Agency").

Facility - A place of business that conducts MP&M operations (also referred to as "site").

Federally Owned Treatment Works (FOTW) - Any device or system owned and/or operated by a United States federal agency to recycle, reclaim, or treat liquid sewage or liquid industrial wastes.

FR - Federal Register, published by the U.S. Government Printing Office. A publication making available to the public regulations and legal notices issued by federal agencies.

FTE - Full time equivalents (related to the number of employees).

HAP - Hazardous air pollutant.

Hazardous waste - Any material that meets the Resource Conservation and Recovery Act definition of "hazardous waste" contained in 40 CFR Part 261.

Hexane Extractable Material (HEM) - A method-defined parameter (EPA Method 1664) that measures the presence of relatively nonvolatile hydrocarbons, vegetable oils, animal fats, waxes, soaps, greases, and related material that are extractable in the solvent n-hexane. This parameter does not include materials that volatilize at temperatures below 85ºC. EPA uses the term "HEM" synonymously with the conventional pollutant oil and grease (O&G).

ICR - Information Collection Request.

Indirect Capital Costs - One-time capital costs that are not technology specific and are represented as a multiplication factor that is applied to the direct capital costs estimated by the MP&M cost model.

Indirect Discharger - An industrial discharger that introduces wastewater into a POTW.

Influent - Wastewater entering a facility wastewater treatment unit.

LTA - Long-term average. For purposes of the pretreatment standards, average pollutant levels achieved over a period of time by a facility, subcategory, or technology option.

MACT - Maximum Achievable Control Technology (applicable to NESHAPs).

Metal Finishing Job Shop - A facility that owns 50 percent or less (based on metal surface area processed per year) of the materials undergoing metal finishing on site.

Minimum Level - The lowest concentration that can be reliably measured by an analytical method.

Mixed-Use Facility - Any municipal, private, U.S. military or federal facility which contains both industrial and commercial/administrative buildings at which one or more industrial sites conduct operations within the facility's boundaries.

MP&M - Metal Products and Machinery Point Source Category.

NSCEP - EPA's National Service Center for Environmental Publications. (http://www.epa.gov/ncepi)

NESHAP - National Emission Standards for Hazardous Air Pollutants.

New Source - As defined in 40 CFR 122.2 and 122.29, and 403.3(k), a new source is any building, structure, facility, or installation from which there is or may be a discharge of pollutants, the construction of which commenced for purposes of compliance with New Source Performance Standards and Pretreatment Standards for New Sources after the promulgation of the final rule under Clean Water Act sections 306 and 307(c).

NRMRL - EPA's National Risk Management Research Laboratory (formerly RREL - EPA's Risk Reduction Engineering Laboratory).

Noncontact Cooling Water - Water used for cooling which does not come into direct contact with any raw material, intermediate product, by-product, waste product, or finished product. This term is not intended to relate to air conditioning systems.

Nonconventional Pollutant - Pollutants other than those defined specifically as conventional pollutants (identified in section 304(a) of the Clean Water Act) or priority pollutants (identified in 40 CFR Part 423, Appendix A).

Nondetect Value - Samples below the level that can be reliable measured by an analytical method. This is also known, in statistical terms, as left-censored (i.e., value having an upper bound at the sample-specific detection limit and a lower bound at zero).

Nonprocess Wastewater - Sanitary wastewater, noncontact cooling water, and storm water. In relation to a mixed use facility, as defined in the MP&M effluent limitations guidelines and standards (40 CFR Part 438), nonprocess wastewater for this part also includes wastewater discharges from nonindustrial sources such as residential housing, schools, churches, recreational parks, and shopping centers, as well as wastewater discharges from gas stations, utility plants, hospitals, and similar sources.

Non-Water Quality Environmental Impact - An environmental impact of a control or treatment technology, other than to surface waters, such as energy requirements, air pollution, and solid waste generation.

NPDES - National Pollutant Discharge Elimination System, a federal program requiring industry dischargers, including municipalities, to obtain permits to discharge pollutants to the nation's water, under section 402 of the Clean Water Act.

NRDC - Natural Resources Defense Council.

NSPS - New source performance standards, under section 306 of the Clean Water Act.

OCPSF - Organic Chemicals, Plastics, and Synthetic Fibers Manufacturing Point Source Category (40 CFR Part 414).

Off Site - Outside the boundary of the facility.

Oil and Grease (O&G) - A method-defined parameter (EPA Method 413.1) that measures the presence of relatively nonvolatile hydrocarbons, vegetable oils, animal fats, (EPA nitrous 413.1) waxes, soaps, greases, and related materials that are extractable in Freon 113 (1,1,2-trichloro-1,2,2-trifluoroethane). This parameter does not include materials that volatilize at temperatures below 75ºC. Oil and grease is a conventional pollutant as defined in section 304(a)(4) of the Clean Water Act and in 40 CFR Part 401.16. Oil and grease is also measured by the hexane extractable material (HEM) method (see Method 1664, promulgated at 64 FR 26315; May 14, 1999). The analytical method for TPH and oil and grease has been revised to allow for the use of normal hexane in place of Freon 113, a chlorofluorocarbon (CFC). Method 1664 (Hexane Extractable Material) replaces the current oil and grease Method 413.1 found in 40 CFR 136.

On Site - Within the boundary of the facility.

Operating and Maintenance (O&M) Costs - Costs related to operating and maintaining a treatment system, including the estimated costs for compliance wastewater monitoring of the effluent.

ORP - Oxidation-reduction potential.

Point Source Category - A category of sources of water pollutants.

Pollutant of Concern - Pollutant parameter identified in MP&M sampling data that met the following criteria: 1) the pollutant parameter was detected in at least three samples collected during the MP&M sampling program: 2) the average concentration of the pollutant parameter in samples of wastewater from MP&M unit operations and influents-to-treatment was at least five times the minimum level, or the average concentration of effluents-from-treatment wastewater samples exceeded five times the minimum level; and (3) the pollutant parameter was analyzed in a quantitative manner (i.e., analysis was not used only for screening purposes and was subject to quality assurance/quality control (QA/QC) procedures).

Pollution Prevention - The use of materials, processes, or practices that reduce or eliminate the creation of pollutants or wastes. It includes practices that reduce the use of hazardous and nonhazardous materials, energy, water, or other resources, as well as those practices that protect natural resources through conservation or more efficient use. Pollution prevention consists of source reduction, in-process recycle and reuse, and water conservation practices.

Publicly Owned Treatment Works (POTW) - A treatment works as defined by section 212 of the Clean Water Act, which is owned by a state or municipality (as defined by section 502(4) of the Clean Water Act). This definition includes any devices and systems used in the storage, treatment, recycling, and reclamation of municipal sewage or industrial wastes of a liquid nature. It also includes sewers, pipes, and other conveyances only if they convey wastewater to a POTW treatment plant. The term also means the municipality as defined in section 502(4) of the Clean Water Act, which has jurisdiction over the indirect discharges to and the discharges from such a treatment works (40 CFR 403.3).

PPA - Pollutant Prevention Act of 1990 (42 U.S.C. 13101 *et seq*., Pub. L. 101-508, November 5, 1990).

Priority Pollutants - The 126 pollutants listed in 40 CFR Part 423, Appendix A.

Privately Owned Treatment Works (PrOTW) - Any device or system owned and operated by a private company that is used to recycle, reclaim, or treat liquid industrial wastes not generated by that company.

Process Wastewater - Any water that, during manufacturing or processing, comes into direct contact with or results from the production or use of any raw material, intermediate product, finished product, by-product, or waste product. This includes wastewater from noncontact, nondestructive testing (e.g., photographic wastewater from nondestructive X-ray examination of parts) performed at facilities subject to MP&M effluent limitations guidelines and standards (40 CFR Part 438**).**

Production Normalized Flow (PNF) - Volume of wastewater per unit of production.

PSES - Pretreatment standards for existing sources of indirect discharges, under section 307(b) of the Clean Water Act.

PSNS - Pretreatment standards for new sources of indirect discharges, under sections 307(b) and (c) of the Clean Water Act.

RCRA - Resource Conservation and Recovery Act (PL 94-580) of 1976, as amended (42 U.S.C. 6901, *et seq*.).

SBREFA - Small Business Regulatory Enforcement Fairness Act of 1996 (P.L. 104-121, March 29, 1996).

SGP - EPA's National Metal Finishing Strategic Goals Program.

SIC - Standard Industrial Classification, a numerical categorization scheme used by the U.S. Department of Commerce to denote segments of industry.

Silica Gel Treated Hexane Extractable Material (SGT-HEM) - The freon-free oil and grease method (EPA Method 1664) used to measure the portion of oil and grease that is similar to total petroleum hydrocarbons. (Also referred to as nonpolar material (NPM)).

Site - A place of business that conducts MP&M operations (also referred to as "facility").

SIU - Significant Industrial User. All industrial users subject to Categorical Pretreatment Standards under 40 CFR 403.6 and 40 CFR Chapter I, subchapter N, and any other industrial user that: discharges an average of 25,000 gallons per day or more of process wastewater to the POTW (excluding sanitary, noncontact cooling, and boiler blowdown wastewater); contributes a process wastestream that makes up 5 percent or more of the average dry weather hydraulic or organic capacity of the POTW treatment plant; or is designated as such by the control authority as defined in 40 CFR 403.12(a) on the basis that the industrial user has a reasonable potential for adversely affecting the POTW's operation or for violating any pretreatment standard or requirement (in accordance with 40 CFR 403.8(f)(6)).

Source Reduction - Any practice that reduces the amount of any hazardous substance, pollutant, or contaminant entering any waste stream or otherwise released into the environment prior to recycling, treatment, or disposal. Source reduction can include equipment or technology modifications, process or procedure modifications, substitution of raw materials, and improvements in housekeeping, maintenance, training, or inventory control.

Surface Waters - Waters including, but not limited to, oceans and all interstate and intrastate lakes, rivers, streams, mudflats, sand flats, wetlands, sloughs, prairie potholes, wet meadows, playa lakes, and natural ponds.

Semivolatile Organic Compound (SVOC) - A measure of semivolatile organic constituents performed by isotope dilution gas chromatography/mass spectrometry (GC/MS), EPA Method 1625. The isotope dilution technique uses stable, isotopically labeled analogs of the compounds of interest as internal standards in the analysis.

Technical Development Document (TDD) - Development Document for the Proposed Effluent Limitations Guidelines and Standards for the Metal Products & Machinery Point Source Category.

Technology in Place (TIP) - Refers to those technologies that the Agency considered to be installed and operating at a model site in 1989 (for Phase I questionnaire recipients) or 1996 (for Phase II questionnaire recipients).

Total Annualized Cost (TAC) - Cost calculated from the capital and annual costs assuming a 7 percent discount rate over an estimated 15-year equipment life.

Total Organic Carbon (TOC) - A nonconventional bulk parameter that measures the total organic content of wastewater (EPA Method 415.1). Unlike five-day biochemical oxygen

demand (BOD_5) or chemical oxygen demand (COD), TOC is independent of the oxidation state of the organic matter and does not measure other organically bound elements, such as nitrogen and hydrogen, and inorganics that can contribute to the oxygen demand measured by BOD_5 and COD. TOC methods utilize heat and oxygen, ultraviolet irradiation, chemical oxidants, or combinations of these oxidants to convert organic carbon to carbon dioxide (CO_2). The CO_2 is then measured by various methods.

Total Organics Parameter (TOP) - A parameter that is calculated as the sum of all quantifiable concentration values greater than the nominal quantitation value of the organic pollutants listed in the Appendix B to 40 CFR Part 438. These organic chemicals are defined as parameters at 40 CFR 136.3 in Table 1C, which also cites the approved methods of analysis or have procedures that have been validated as attachments to EPA Methods 1624/624 or 1625/625.

Total Capital Investment (TCI) - Total one-time capital costs required to build a treatment system (i.e., sum of direct and indirect capital costs).

Total Petroleum Hydrocarbons (TPH) - A method-defined parameter that measures the presence of mineral oils that are extractable in Freon 113 (1,1,2-trichloro-1,2,2-trifluoroethane) and not absorbed by silica gel. The analytical method for TPH and oil and grease has been revised to allow for the use of normal hexane in place of Freon 113, a chlorofluorocarbon (CFC). Method 1664 (Hexane Extractable Material) replaces the current oil and grease Method 413.1 found in 40 CFR 136. (Also referred to as nonpolar material (NPM)).

Treatment Effectiveness Concentration - Treated effluent pollutant concentration that can be achieved by each treatment technology that is part of an MP&M regulatory option.

Treatment, Storage, and Disposal Facility (TSDF) - A facility that treats, stores, or disposes of hazardous waste in compliance with the applicable standards and permit requirements set forth in 40 CFR Parts 264, 265, 266, and 270.

TRI - Toxic Release Inventory.

TSCA - Toxic Substances Control Act (15 U.S.C. 2601 *et seq*.).

TSS - Total suspended solids. A measure of the amount of particulate matter that is suspended in a water sample, obtained by filtering a water sample of known volume. The particulate material retained on the filter is then dried and weighed (see Method 160.2).

TTO - Total toxic organics, as defined in the Metal Finishing effluent guidelines (40 CFR Part 433).

TWF - Toxic weighting factor. A factor developed for various pollutants using a combination of toxicity data on human health and aquatic life and relative to the toxicity of copper. EPA uses

toxic weighting factors in determining the amount of toxicity that a pollutant may exert on human health and aquatic life.

U.S.C. - The United States Code.

Unit Operations - All processes performed on metal parts, products, or machines in their manufacture, maintenance, or rebuilding.

Variability Factor - A variability factor is used in calculating a limitation to allow for reasonable, normal variation in pollutant concentrations when processed through well designed and operated treatment systems. Variability factors account for normal fluctuations in treatment. By accounting for these reasonable excursions about the long-term average, EPA's use of variability factors results in limitations that are generally well above the actual long-term average.

Volatile Organic Compound (VOC) - A measure of volatile organic constituents performed by isotope dilution gas chromatography/mass spectrometry (GC/MS), EPA Method 1624. The isotope dilution technique uses stable, isotopically labeled analogs of the compounds of interest as internal standards in the analysis.

Wet Air Pollution or Odor Pollution Control System Scrubbers - Any equipment using water or water mixtures to control emissions of dust, odors, volatiles, sprays, or other pollutants.

Zero Discharger - A facility that does not discharge pollutants to waters of the United States or to a POTW. Also included in this definition are discharge or disposal of pollutants by way of evaporation, deep-well injection, off-site transfer to a treatment facility, and land application.